SERVICE BULLETIN

MITSUBISHI MOTORS

GLOBAL AFTER SALES OFFICE, MITSUBISHI MOTORS CORPORATION

PURPOSE : CORRECTION	ISSUE NO. : MSB-14EXL21-501	DATE : 2014-12-15
SUBJECT : Error in writing about the clutch switch		<DESTINATION/MODEL> (As per attached sheet 1) <M/Y> 09-15
GROUP : Gr:21(Clutch)		

1. Description :

Please refer to the attached document for the correction of the error in writing existing in the applicable service manual.

2. Affected service manuals : (Attached sheet 1)

3. About the details :

Please refer to the attached document (Attached sheet 2-6))

L200/ TRITON /SPORTERO/STRADA/ STRADA SPORTERO

EU/RUSSIA

Applicable manual	Pub. No.	Applicable title (INFO ID)	Content
2014 L200 Workshop Manual	CKTE14E1-CD(ENG) CKTF14E1-CD(FRE) CKTG14E1-CD(GER) CKTS14E1-CD(SPA) CKTI14E1-CD(ITA) RUSSIA:N/A	CLUTCH PEDAL REMOVAL AND INSTALLATION （M211-00-161-00800-01）	Attached sheet 2
2015 L200 Workshop Manual	CKTE15E1-CD(ENG) CKTF15E1-CD(FRE) CKTG15E1-CD(GER) CKTS15E1-CD(SPA) CKTI15E1-CD(ITA) RUSSIA:N/A	CLUTCH PEDAL REMOVAL AND INSTALLATION （M211-00-161-00800-01）	Attached sheet 2

Except EU/RUSSIA

MMAL/NZ

Applicable manual	Pub. No.	Applicable title (INFO ID)	Content
2009 TRITON Workshop Manual	MR936476 NZ:DRAFT	CLUTCH PEDAL REMOVAL AND INSTALLATION （M211-00-160-87800-01）	Attached sheet 3

G.EXP/GCC/MEXCO/S.AFRICA/SINGAPORE/THAILAND/MMAL/NZ

Applicable manual	Pub. No.	Applicable title (INFO ID)	Content
2014 L200/SPORTERO/ TRITON/STRADA/ STRADA SPORTERO Workshop Manual	PWTE1308R(ENG) PWTS1309R(SPA) NZ:DRAFT MMAL:AU900406 MEXICO/S.AFRICA SINGAPORE/THAILAND: DRAFT	GROUP21A (CLUTCH)	Attached sheet 5

NATIVA/PAJERO SPORT/MONTERO SPORT

Applicable manual	Pub. No.	Applicable title (INFO ID)	Contents
2009 NATIVA/PAJERO SPORT/MONTERO SPORT Workshop Manual	PWJE0808R-2(ENG) PWJS0809R-2(SPA) NZ:DRAFT MMAL:MR936972 MEXICO/S.AFRICA SINGAPORE/THAILAND: DRAFT	CLUTCH PEDAL REMOVAL AND INSTALLATION （M211-00-160-97500-01）	Attached sheet 4
2010 NATIVA/PAJERO SPORT/MONTERO SPORT Workshop Manual	PWJE0910R(ENG) PWJS0911R(SPA) NZ:DRAFT MMAL:MR936972 MEXICO/S.AFRICA SINGAPORE/THAILAND: DRAFT	CLUTCH PEDAL REMOVAL AND INSTALLATION （M211-00-161-05300-01）	Attached sheet 4
2011 NATIVA/PAJERO SPORT/MONTERO SPORT Workshop Manual	PWJE1004R(ENG) PWJS1005R(SPA) NZ:DRAFT MMAL:AU900055 MEXICO/S.AFRICA SINGAPORE/THAILAND: DRAFT	CLUTCH PEDAL REMOVAL AND INSTALLATION （M211-00-161-09700-01）	Attached sheet 4
2014 NATIVA/PAJERO SPORT/MONTERO SPORT Workshop Manual	PWJE1310R(ENG) PWJS1311R(SPA) NZ:DRAFT MMAL:AU900407 MEXICO/S.AFRICA SINGAPORE/THAILAND: DRAFT	GROUP21A (CLUTCH)	Attached sheet 6

Attached sheet 2

REMOVAL AND INSTALLATION

Pre-removal Operation	Post-installation Operation
• Lower Panel Assembly Removal (Refer to GROUP 52A – Instrument Panel Assembly). • Drivers side under cover <Except vehicles Single cab> Removal (Refer to GROUP 52A – Instrument Panel Assembly). • ETACS-ECU Removal. <LHD>	• ETACS-ECU Installation. <LHD> • Drivers side under cover <Except vehicles Single cab> Installation (Refer to GROUP 52A – Instrument Panel Assembly). • Lower Panel Assembly Installation (Refer to GROUP 52A – Instrument Panel Assembly). • Clutch Pedal Adjustment (Refer to).

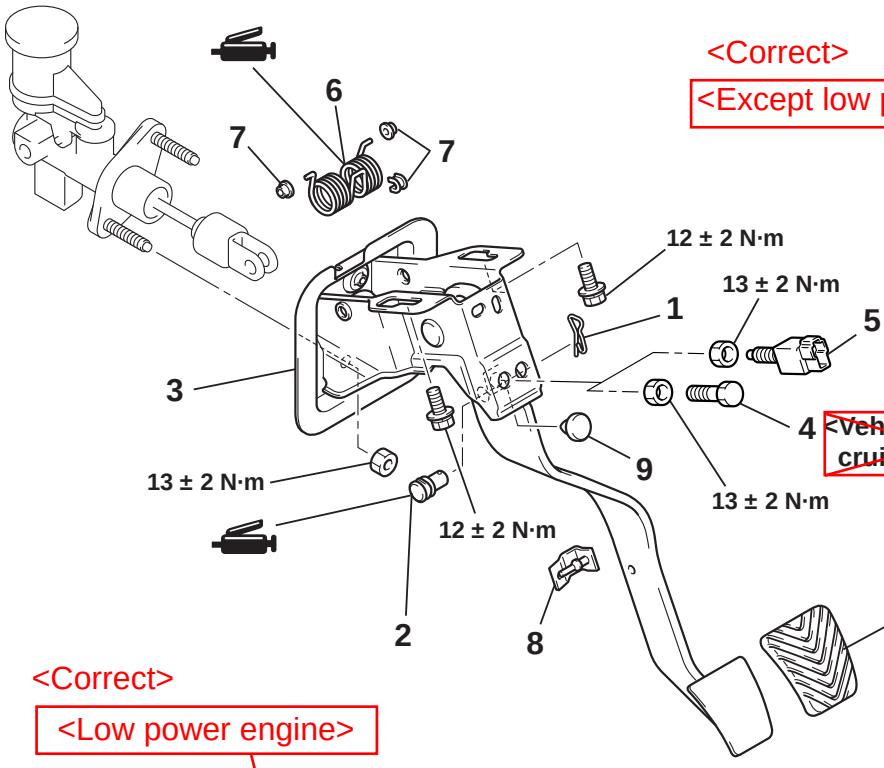

AC900934AB

<Correct>
<Except low power engine>
<Incorrect>
<Vehicles with cruise control>
<Vehicles without cruise control>
<Correct>
<Low power engine>

Removal steps

1. Snap pin
2. Clevis pin
3. Clutch pedal assembly
4. Adjusting bolt <Vehicles without cruise control> <Incorrect>
>>A<< 5. Clutch switch <Vehicles with cruise control> <Incorrect>

Removal steps

6. Return spring
7. Bushing
8. Stopper
9. Pedal stopper
10. Pedal pad

<Correct>
<Low power engine>

INSTALLATION SERVICE POINT

<Incorrect>

>>A<< CLUTCH SWITCH <VEHICLES WITH CRUISE CONTROL>

<Correct> <Except low power engine>

<Correct> <Except low power engine>

Attached sheet 3

REMOVAL AND INSTALLATION

⚠ CAUTION

Do not apply grease or lubricant to the switch and the switch installation section to avoid malfunction of the switch. In addition, do not use gloves which have grease on them.

Pre-removal Operation	Post-installation Operation
• Lower Panel Assembly Removal (Refer to GROUP 52A – Instrument Panel Assembly).	• Lower Panel Assembly Installation (Refer to GROUP 52A – Instrument Panel Assembly). • Clutch Pedal Adjustment (Refer to).

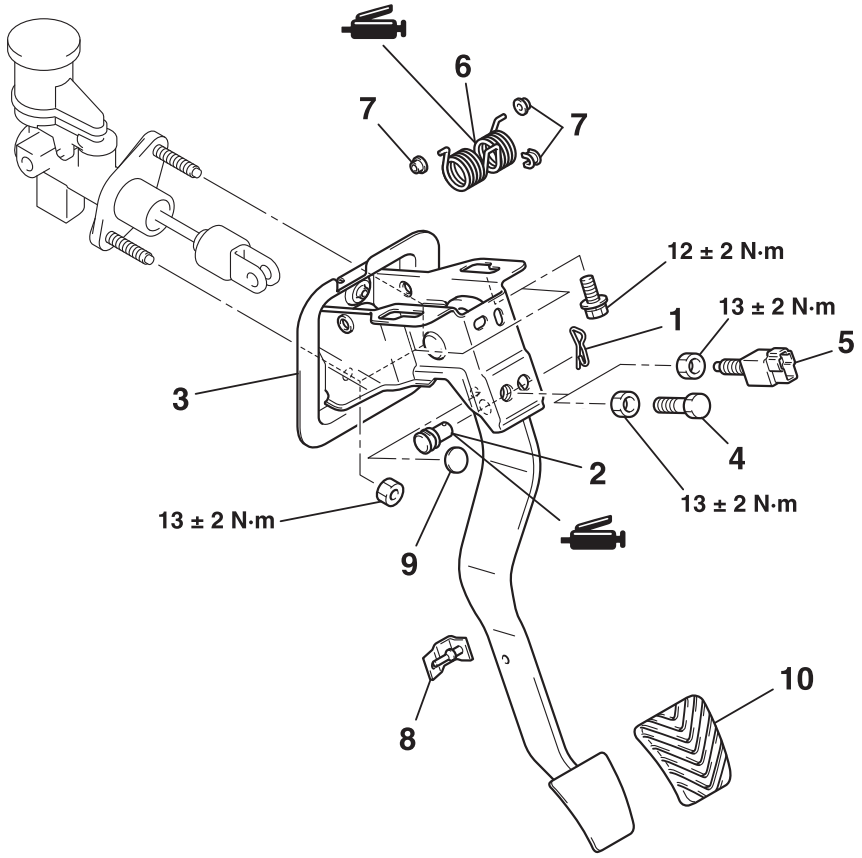

AC511496AC

Removal steps

1. Snap pin
2. Clevis pin
3. Clutch pedal assembly
4. Adjusting bolt <Vehicles without cruise control>
>>A<<Ia 5. Clutch switch <Vehicles with cruise control>

<Added>
Except 6G7,
6G7, <Added>

Removal steps

6. Turnover spring
7. Bushing
8. Stopper
9. Pedal stopper
10. Pedal pad

INSTALLATION SERVICE POINT

>>A<< CLUTCH SWITCH <VEHICLES WITH CRUISE CONTROL>

6G7, <Added>

Attached sheet 4

REMOVAL AND INSTALLATION

CAUTION

Do not apply grease or lubricant to the switch and the switch installation section to avoid malfunction of the switch. In addition, do not use gloves which have grease on them.

Pre-removal Operation	Post-installation Operation
• Lower Panel Assembly Removal (Refer to GROUP 52A – Instrument Panel Assembly). • ETACS-ECU Removal <LHD> (Refer to GROUP 54A – ETACS).	• ETACS-ECU Installation <LHD> (Refer to GROUP 54A – ETACS). • Lower Panel Assembly Installation (Refer to GROUP 52A – Instrument Panel Assembly). • Clutch Pedal Adjustment (Refer to).

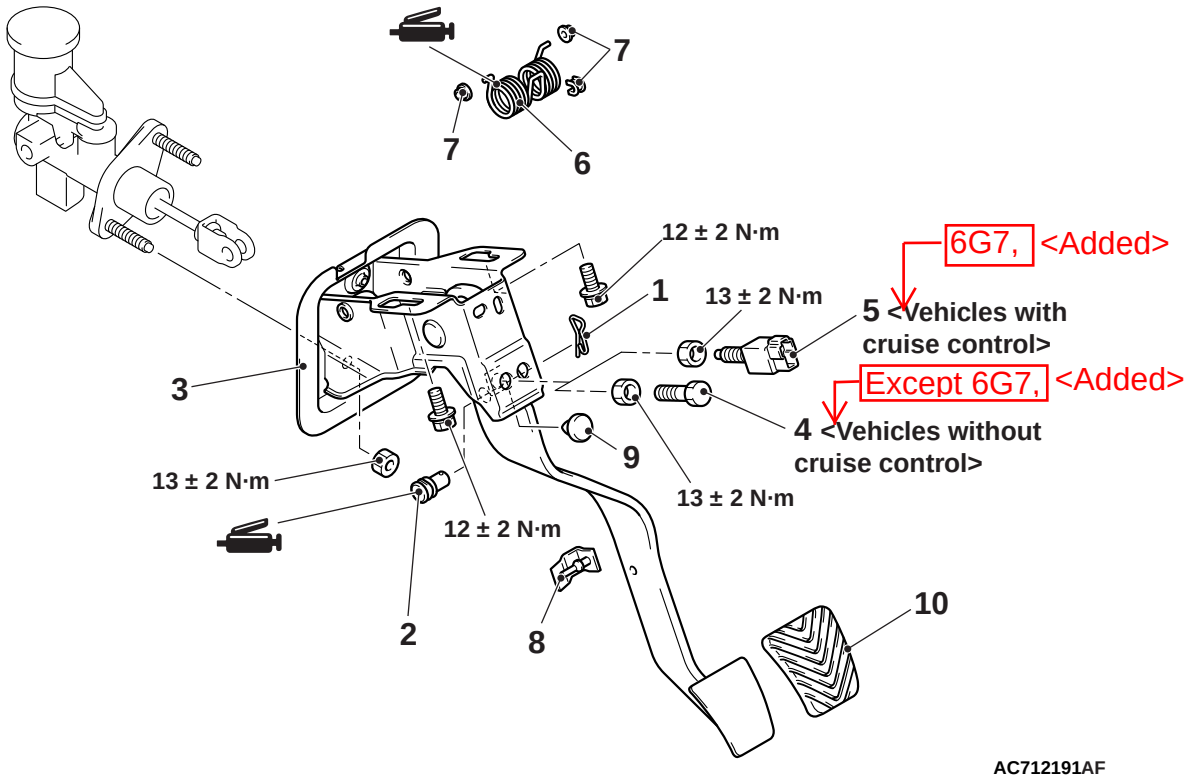

Removal steps

1. Snap pin
2. Clevis pin
3. Clutch pedal assembly
4. Adjusting bolt <Vehicles without cruise control> <Added> Except 6G7,
>>A<< 5. Clutch switch <Vehicles with cruise control> 6G7, <Added>

Removal steps

6. Turnover spring
7. Bushing
8. Stopper
9. Pedal stopper
10. Pedal pad

INSTALLATION SERVICE POINT

>>A<< CLUTCH SWITCH <VEHICLES WITH CRUISE CONTROL> 6G7, <Added>

Attached sheet 5

<Added>

GROUP 21A

CLUTCH

GENERAL INFORMATION

M1211000100825

OUTLINE OF CHANGE

On vehicles with 4D5-DOHC-T/C engine, the new clutch switch assembly incorporates a clutch switch. Due to this, the adjusting bolt has been discontinued.

The specification of this switch and how to install it are the same as for those installed on vehicles with cruise-control system.

Attached sheet 6

<Added>

GROUP 21A

CLUTCH

GENERAL INFORMATION

M1211000100836

OUTLINE OF CHANGE

On vehicles with 4D5 engine, the new clutch switch assembly incorporates a clutch switch. Due to this, the adjusting bolt has been discontinued.

The specification of this switch and how to install it are the same as for those installed on vehicles with cruise-control system.