SERVICE BULLETIN

MITSUBISHI MOTORS

GLOBAL AFTER SALES OFFICE, MITSUBISHI MOTORS CORPORATION

PURPOSE : CORRECTION	ISSUE NO. : MSB-14EXL42-501	DATE : 2014-12-22
SUBJECT : Error in writing of the standard value of toe-angle		<DESTINATION/MODEL> (EU/RUSSIA/G.EXP/GCC/ MMAL/NZ) <M/Y> 11-15
GROUP : Gr:34(Rear suspention)		As per attached sheet 1

1. Description :

Please refer to the attached document for the correction of the error in writing existing in the applicable service manual.

2. Affected service manuals : (Attached sheet 1)

3. About the details :

Please refer to the attached document (Attached sheet 2-3)

Attached sheet 1 (1/2)

<EU/RUSSIA>

Applicable manual	Pub. No.	Applicable title (INFO ID)	Content
2011 ASX Workshop manual	CGWE11E2-CD (ENG) CGWF11E2-CD (FRE) CGWG11E2-CD (GER) CGWS11E2-CD (SPA) CGWI11E2-CD (ITA) RUSSIA:N/A	Service specifications (M341-00-031-16700-01)	Attached sheet 2
2012 ASX Workshop manual	CGWE12E1-CD (ENG) CGWF12E1-CD (FRE) CGWG12E1-CD (GER) CGWS12E1-CD (SPA) CGWI12E1-CD (ITA) RUSSIA:N/A	Service specifications (M341-00-031-16700-01)	Attached sheet 2
2013 ASX Workshop manual	CGAE13E2-CD (ENG) CGAF13E2-CD (FRE) CGAG13E2-CD (GER) CGAS13E2-CD (SPA) CGAI13E2-CD (ITA) RUSSIA:N/A	Service specifications (M341-00-031-16700-01)	Attached sheet 2
2014 ASX Workshop manual	CGAE14E1-CD (ENG) CGAF14E1-CD (FRE) CGAG14E1-CD (GER) CGAS14E1-CD (SPA) CGAI14E1-CD (ITA) RUSSIA:N/A	Service specifications (M341-00-031-16700-01)	Attached sheet 2
2015 ASX Workshop manual	CGAE15E1-CD (ENG) CGAF15E1-CD (FRE) CGAG15E1-CD (GER) CGAS15E1-CD (SPA) CGAI15E1-CD (ITA) RUSSIA:N/A	Service specifications (M341-00-031-16700-01)	Attached sheet 2

<G.EXP/GCC/MMAL/NZ>

Applicable manual	Pub. No.	Applicable title (INFO ID)	Contents
2011 ASX Workshop manual	PWPE1006R (ENG) PWPS1007R (SPA) NZ:DRAFT AU900409	Service specifications (M341-00-031-23100-01)	Attached sheet 2
		Rear wheel alignment check and adjustment (M341-01-101-19300-01)	Attached sheet 3
2012 ASX Workshop manual	PWPE1107R (ENG) PWPS1108R (SPA) NZ:DRAFT AU900409	Service specifications (M341-00-031-23100-01)	Attached sheet 2
		Rear wheel alignment check and adjustment (M341-01-101-19300-01)	Attached sheet 3
2013 ASX Workshop manual	<G.EXP/GCC> PWPE1204R (ENG) PWPS1205R (SPA) <MMAL> AU900409 <NZ> DRAFT	Service specifications (M341-00-031-23100-01)	Attached sheet 2
		Rear wheel alignment check and adjustment (M341-01-101-19300-01)	Attached sheet 3
2014 ASX Workshop manual	<G.EXP/GCC> PWPE1312R (ENG) PWPS1313R (SPA)	Service specifications (M341-00-031-23100-01)	Attached sheet 2

	NZ:DRAFT <MMAL> AU900410	Rear wheel alignment check and adjustment (M341-01-101-19300-01)	Attached sheet 3

Attached sheet 1 (2/2)

Applicable manual	Pub. No.	Applicable title (INFO ID)	Contents
2015 ASX Workshop manual	<G.EXP/GCC> PWPE1412R (ENG) PWPS1413R (SPA) <MMAL> AU900418 <NZ> DRAFT	Service specifications (M341-00-031-23100-01)	Attached sheet 2
		Rear wheel alignment check and adjustment (M341-01-101-19300-01)	Attached sheet 3

<EU/EXP/MMAL/NZ>

Applicable manual	Pub. No.	Applicable title (INFO ID)	Contents
2012 PEUGEOT 4008/ CITROEN C4 AIRCROSS (PZC) Workshop manual	N/A	Service specifications (M341-00-031-23100-01)	Attached sheet 2
		Rear wheel alignment check and adjustment (M341-01-101-19300-01)	Attached sheet 3

Attached sheet 2

SERVICE SPECIFICATIONS

0° 07' ± 0° 05' <Correct>

Item		Standard value
Toe in mm	At the centre of tyre read mm	3 ± 2
Toe-angle (per wheel)		~~0 ° 08' ± 0 ° 15'~~ <Incorrect>
Camber		–0°25' ± 0°30' (Difference between right and left wheels must 0°30' or less)
Stabilizer link ball joint rotation torque N·m		0.5 - 2.9

Attached sheet 3

ON-VEHICLE SERVICE

REAR WHEEL ALIGNMENT CHECK AND ADJUSTMENT

M1341011001193

1. Before the wheel alignment measurement, adjust the rear suspension, wheel, and tyres in good condition.
2. Park the vehicle on a level surface to measure the wheel alignment.

TOE-IN

0° 07' ± 0° 05' <Correct>

Standard value:
At the centre of tyre tread: 3 ± 2 mm
Toe-angle (per wheel): ~~0 ° 03' ± 0 ° 15'~~ <Incorrect>

If it is out of the standard range, adjust as follows:

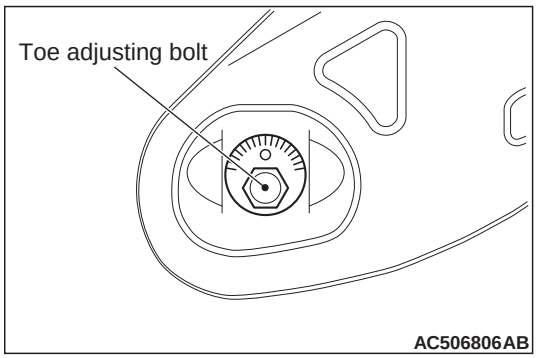

Turn the toe adjusting bolt (the mounting bolt inside the body on the control link) to adjust.

Left wheels: Clockwise (+) Toe in
Right wheels: Clockwise (–) Toe in

Toe-in varies approximately 2.6 mm (equivalent to 0°16' of the toe angle for one side) for each scale mark.

CAMBER

Standard value: –0°25' ±0°30' (difference between right and left wheels must 0°30' or less)

NOTE:

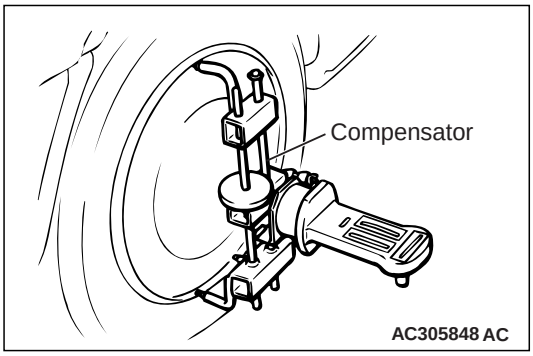

For 2WD vehicles with aluminium wheels, attach the camber/caster/kingpin gauge by using a compensator.

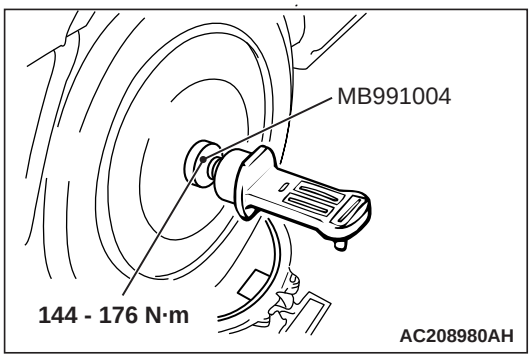

For 4WD vehicles with aluminium wheels, tighten special tool wheel alignment gauge attachment (MB991004) to the specified torque, then measure the camber.

- *The camber is pre-adjusted at factory and is not adjustable.*