SERVICE BULLETIN

MITSUBISHI MOTORS

GLOBAL AFTER SALES OFFICE, MITSUBISHI MOTORS CORPORATION

PURPOSE : CHANGE	ISSUE NO. : MSB-14EXM42-001	DATE : 2014-09-17
SUBJECT : Addition of the filling points of the sound dampening foam material to the inside of the rear end		<DESTINATION/MODEL> (RUSSIA/MMNA/USTP/ G.EXP/GCC) <M/Y> 13
GROUP : Gr:42(Body)		OUTLANDER SPORT/RVR/ASX(GA0W)

1. Description :

Please refer to the attached document for the information about the change of mention in the applicable service manual.

2. Affected service manuals :

For MMNA

Applicable manual	Service bulletin No.	Applicable title (INFO-ID)	Contents
2013MY OUTLANDER SPORT/RVR Body Repair Manual	MSB-12M00-004	GENERAL INFORMATION (M010-00-020-63100-01) <after>	Attached sheet 1
		SILENCER APPLICATION LOCATIONS (M010-00-010-14000-01) <after>	Attached sheet 2

For G.EXP/GCC

Applicable manual	Service bulletin No.	Applicable title (INFO-ID)	Contents
2013MY ASX Body Repair Manual	MSB-12X00-011	GENERAL INFORMATION (M010-00-020-63100-01) <after>	Attached sheet 3
		SILENCER APPLICATION LOCATIONS (M010-00-010-16200-01) <after>	Attached sheet 4

For Russia

Applicable manual	Service bulletin No.	Applicable title (INFO-ID)	Contents
2013MY ASX Body Repair Manual	MSB-12EX00-001	GENERAL INFORMATION (M010-00-020-63100-01) <after>	Attached sheet 5
		SILENCER APPLICATION LOCATIONS (M010-00-010-15100-01) <after>	Attached sheet 6

3. About the details :

Please refer to the attached document (Attached sheet 1-6)

※This service manual is only for Outlander Sport/RVR/ASX manufactured in MMNA

FOAMING MATERIAL USAGE LOCATIONS

M4010006000334

The sound dampening foam material has been added to the inside of the rear end to improve air-tightness.

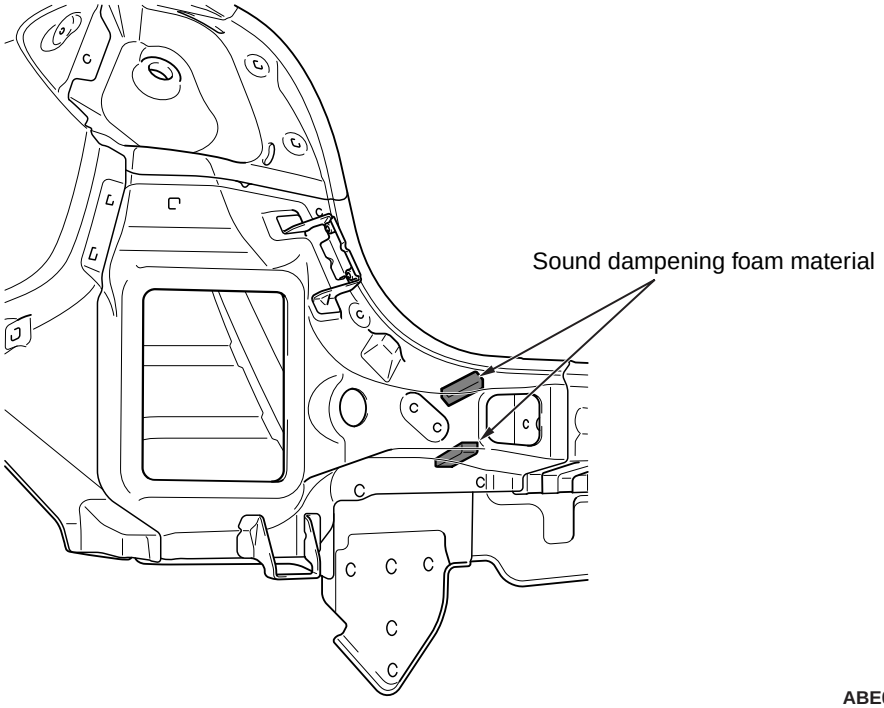

ABE00566AB

QUARTER OUTER

M4030008001498

⚠ CAUTION

When repairing the area using sound dampening foam material do not use firing tools since the sound dampening foam material may burn.

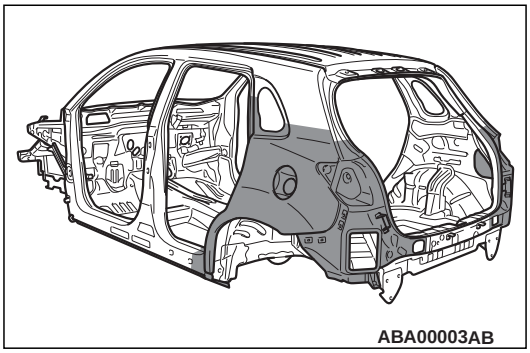

ABA00003AB

Symbol	Operation description
● ● ● ●	Spot welding
■ ■ ▲ ▲	MIG plug welding (■: indicates two panels to be welded ▲: indicates three panels to be welded)
+ + + +	MIG spot welding
⫴⫴⫴⫴⫴⫴	MIG arc welding (continuous)
ooooooooo	Braze welding
	Anti-corrosion agent application locations (Use access holes to apply liberally to butt-welded joints.)

The other information is the same as before.

REPAIR WELDS

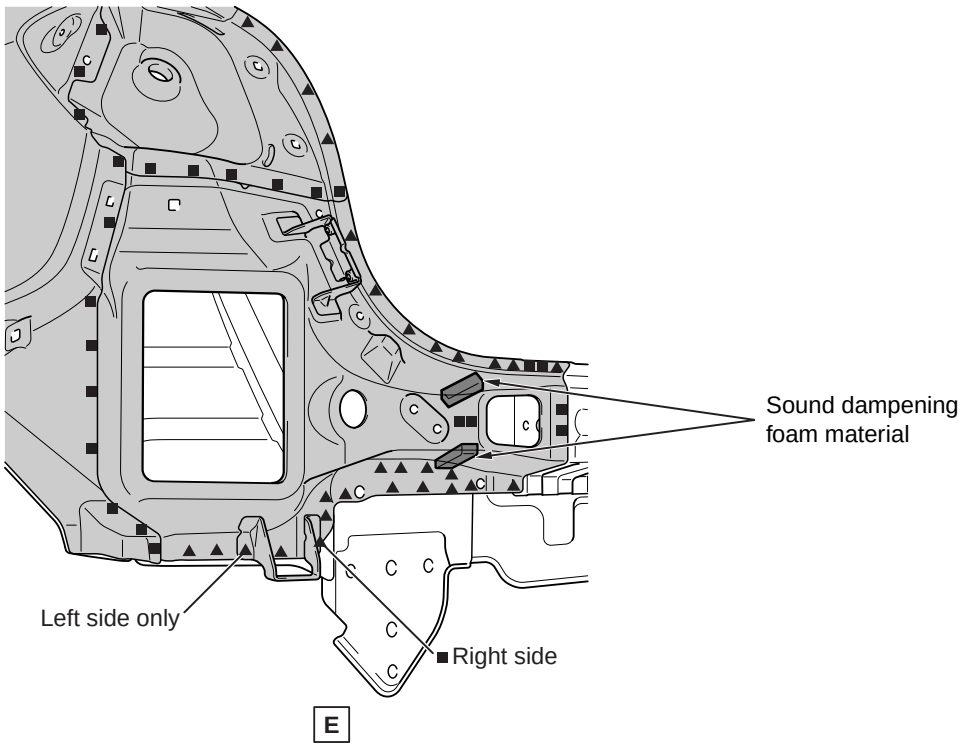

ABE00567AB

NOTE ON REPAIR WORK

INSTALLATION

The other information is the same as before.

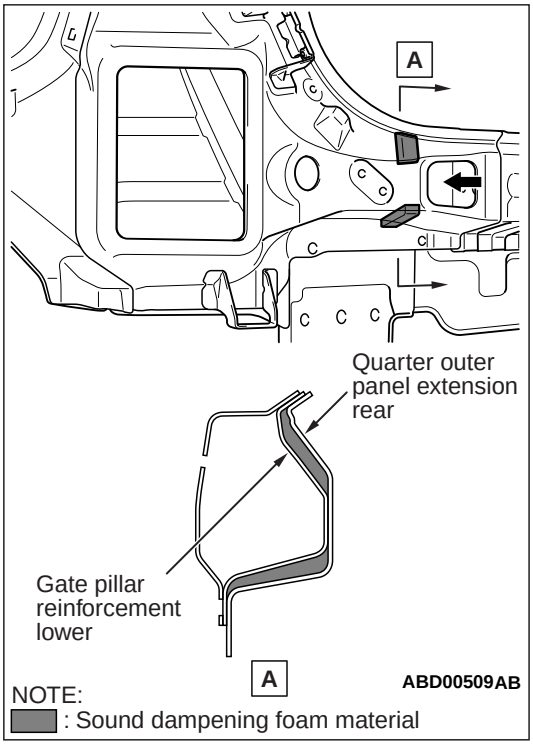

1. After installing the quarter panel outer, seal the hole and flange with bolt and sheet-metal tape, and then fill the hole with sound dampening foam materials as shown in the figure.

   Sound dampening foam material: 3M™ AAD Part No.08463

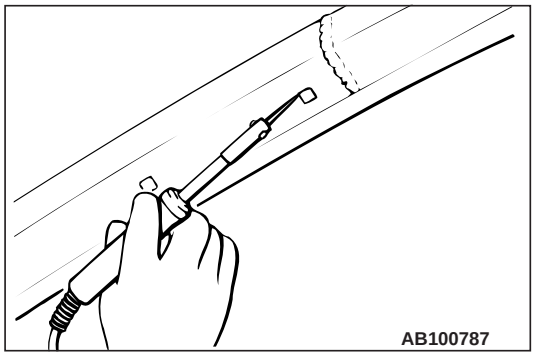

2. Wait 2 hours after filling the sound dampening foam material to remove the bolt and aluminum tape, then melt the sound dampening foam material with a soldering gun so a clip, etc. can thoroughly be inserted in the hole filled with sound dampening foam material.

FOAMING MATERIAL USAGE LOCATIONS <Vehicles for MMNA production>

M4010006000323

The sound dampening foam material has been added to the inside of the rear end to improve air-tightness.

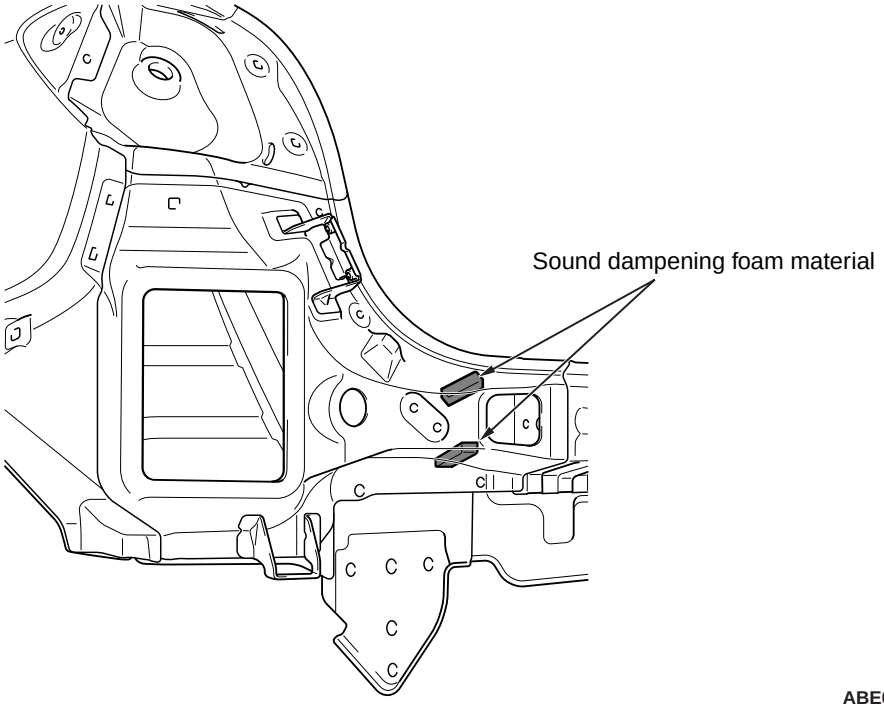

ABE00566AB

QUARTER OUTER <Vehicles for MMNA production>

M4030008001487

⚠ CAUTION

When repairing the area using sound dampening foam material do not use firing tools since the sound dampening foam material may burn.

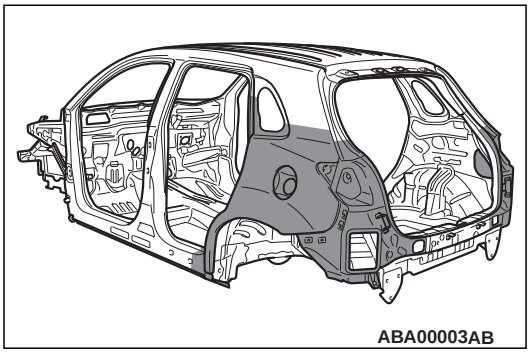

Symbol	Operation description
● ● ● ●	Spot welding
■ ■ ▲ ▲	MIG plug welding (■: indicates two panels to be welded ▲: indicates three panels to be welded)
+ + + +	MIG spot welding
⧺⧺⧺⧺⧺⧺⧺⧺⧺⧺	MIG arc welding (continuous)
∞∞∞∞∞∞∞∞	Braze welding
	Anti-corrosion agent application locations (Use access holes to apply liberally to butt-welded joints.)

The other information is the same as before.

REPAIR WELDS

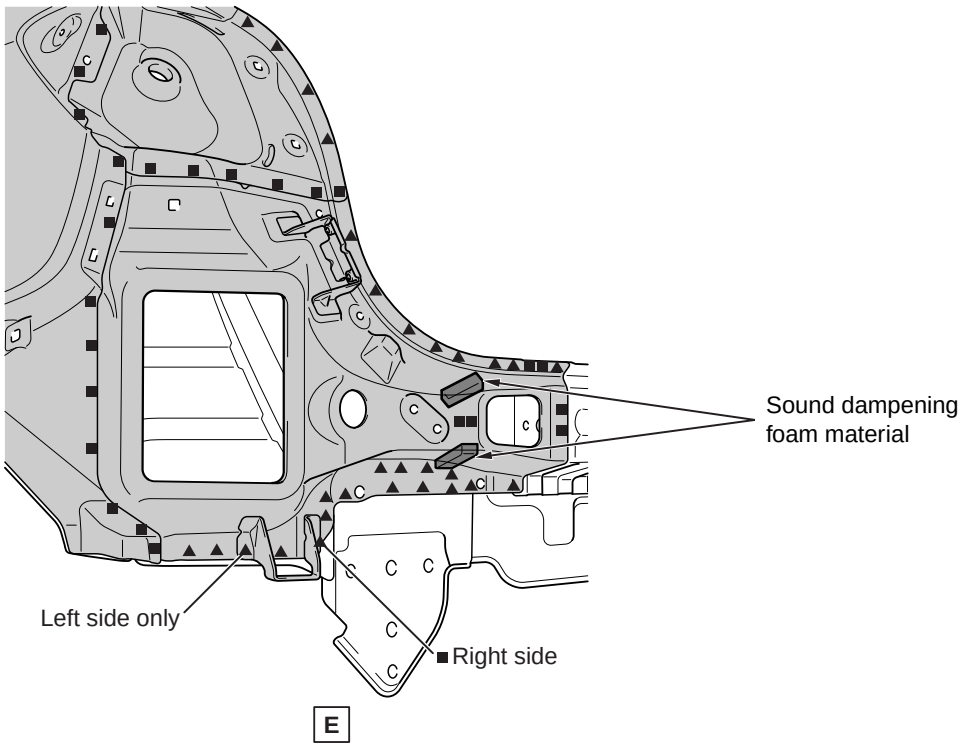

NOTE ON REPAIR WORK

INSTALLATION

The other information is the same as before.

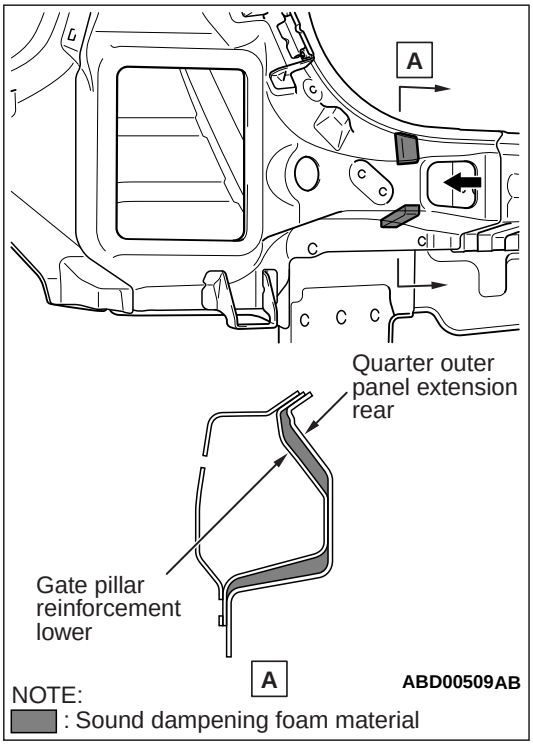

1. After installing the quarter panel outer, seal the hole and flange with bolt and sheet-metal tape, and then fill the hole with sound dampening foam materials as shown in the figure.

   Sound dampening foam material: 3M ATD Part No.08463

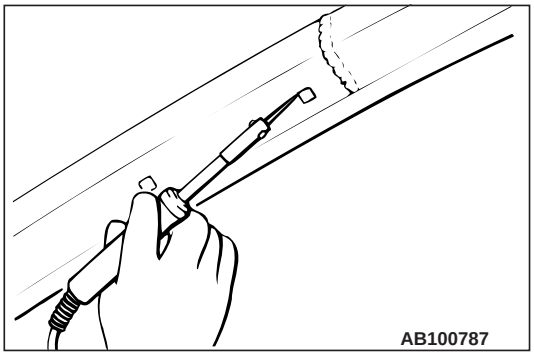

2. Wait 2 hours after filling the sound dampening foam material to remove the bolt and aluminium tape, then melt the sound dampening foam material with a soldering gun so a clip, etc. can thoroughly be inserted in the hole filled with sound dampening foam material.

FOAMING MATERIAL USAGE LOCATIONS <Vehicles for Russia>

M4010006000345

The sound dampening foam material has been added to the inside of the rear end to improve air-tightness.

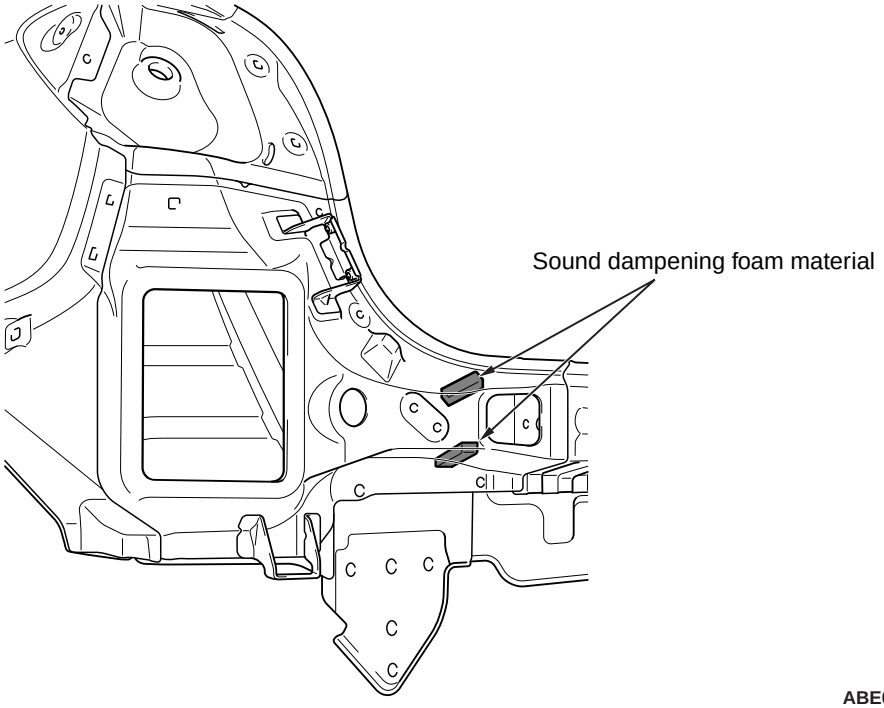

ABE00566AB

QUARTER OUTER <Vehicles for Russia>

M4030008001506

⚠ CAUTION

When repairing the area using sound dampening foam material do not use firing tools since the sound dampening foam material may burn.

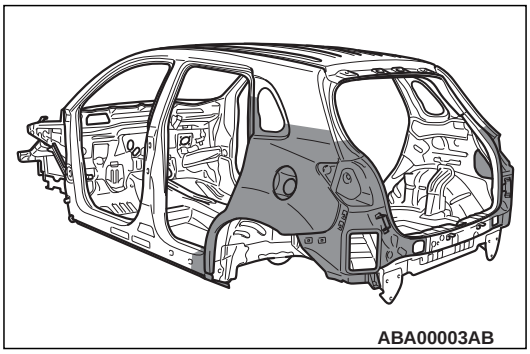
ABA00003AB

Symbol	Operation description
● ● ● ●	Spot welding
■ ■ ▲ ▲	MIG plug welding (■: indicates two panels to be welded ▲: indicates three panels to be welded)
+ + + +	MIG spot welding
|||||||||||	MIG arc welding (continuous)
oooooooooo	Braze welding
	Anti-corrosion agent application locations (Use access holes to apply liberally to butt-welded joints.)

The other information is the same as before.

REPAIR WELDS

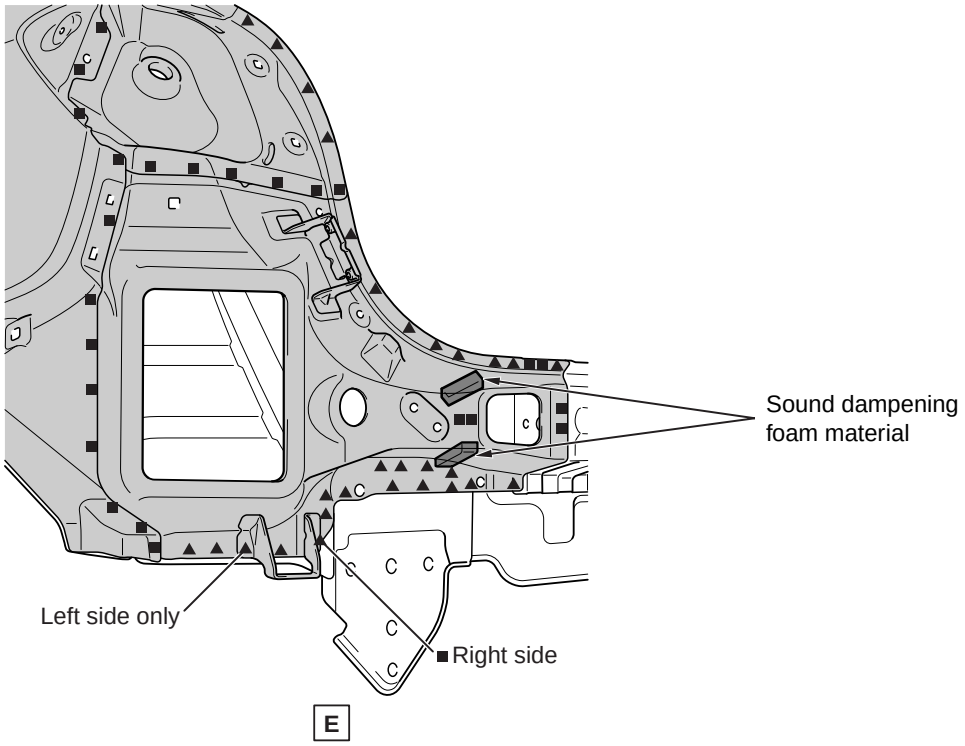

ABE00567AB

NOTE ON REPAIR WORK

INSTALLATION

The other information is the same as before.

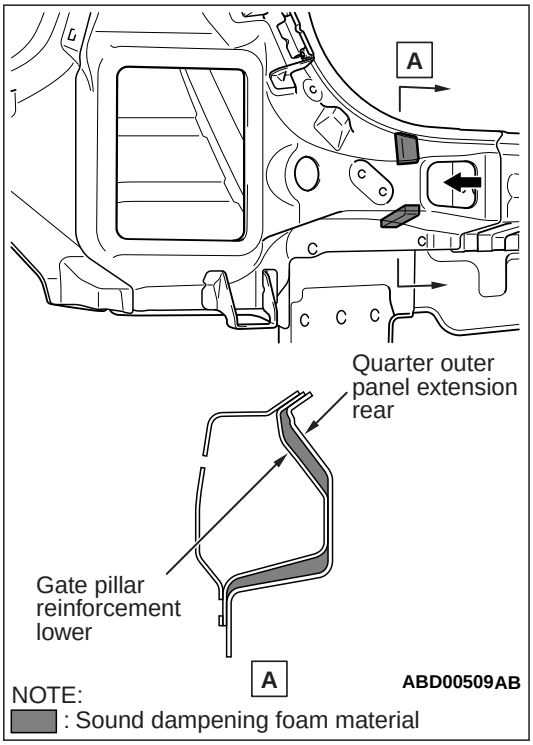

1. After installing the quarter panel outer, seal the hole and flange with bolt and sheet-metal tape, and then fill the hole with sound dampening foam materials as shown in the figure.

   Sound dampening foam material: 3M ATD Part No.08463

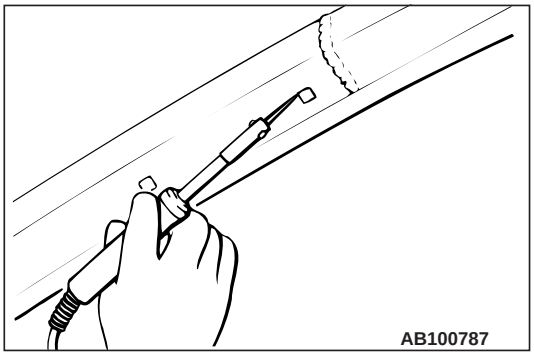

2. Wait 2 hours after filling the sound dampening foam material to remove the bolt and aluminium tape, then melt the sound dampening foam material with a soldering gun so a clip, etc. can thoroughly be inserted in the hole filled with sound dampening foam material.