MITSUBISHI MOTORS

SERVICE BULLETIN

GLOBAL AFTER SALES OFFICE, MITSUBISHI MOTORS CORPORATION

PURPOSE : CHANGE	ISSUE NO. : MSB-14EXM52-001A	DATE : 2014-07-24
SUBJECT : CURTAIN AIR BAG MODULES FOR THE REGULATION FMVSS226		<DESTINATION/MODEL> (MMNA/USTP/MEXICO/EUR /RUSSIA/G.EXP/GCC OUTLANDER SPORT/RVR/ASX (GA0W) <M/Y> 11-15
GROUP : INTERIOR(Gr:52A)/SRS AIR BAG(Gr:52B)		

1. Description :

Please refer to the attached document for the information about the change of mention in the applicable service manual.(The curtain air bag modules corresponding to the regulation FMVSS226 has been mounted on the vehicles. The regulation FMVSS226 is only for U.S.A and Canada, however, the vehicles except for both countries also correspond to it)

2. Affected service manuals :

Please refer to the attached document (Attached sheet 2)

3. About the details :

Please refer to the attached document (Attached sheets 3-5)

4. Affective time : (Please see the attached sheet 1 about the details of affected vehicles)

5. Compatibility of the clips : Please see the following table

	Vehicles corrseponding to FMVSS226	Vehicles not corresponding to FMVSS226
New clip	Compatible	Compatible
Old clip	—	Compatible

連番	##STN	SNO	MODEL	Date	SEQ	YR	Line	PART	VIN	simple VIN		
48	35	39899	GA2WXTXHL4M	402	242	40	MAIN-ON	1314	4A4AP4AU4EE000062	EE000062	US	Exception / P trial vehicle
314	8	08083	GA2WXTMHL4M	415	135	40	DELAY-1	1314	4A4AP3AU9EE027168	EE027168	US	New CAB for US and the oldest VIN #. 新CAB US向で最も古いVIN#
336	15	08220	GA2WXTXHZL4M	415	105	40	TRIM	1314	4A4AR4AU7EE027220	EE027220	US	Un sequential VIN# = NEW CAB, 飛びVIN#
363	42	08321	GA2WXTMHL4M	415	62	40	TRIM	1314	4A4AP3AU4EE027255	EE027255	US	Un sequential VIN# = NEW CAB, 飛びVIN#
433	112	08519	GA2WXTMHL4M	414	181	40	TRIM	1314	4A4AP3AUXEE027325	EE027325		Old CAB
430	109	08545	GA2WXTXHZL4M	414	188	40	TRIM	1314	4A4AR4AU6EE027337	EE027337		Old CAB
438	117	08554	GA2WXTXHL4M	414	172	40	TRIM	1314	4A4AP4AU4EE027343	EE027343		Old CAB
381	60	08589	GA2WXTMHL4M	415	28	40	TRIM	1314	4A4AP3AU5EE027359	EE027359	US	Un sequential VIN# = NEW CAB, 飛びVIN#
460	139	08673	GA2WXTXHZL4M	414	137	40	TRIM	1314	4A4AR4AU9EE027395	EE027395		Old CAB
399	78	08674	GA2WXTMHL4M	415	4	40	TRIM	1314	4A4AP3AU0EE027396	EE027396	US	Un sequential VIN# = NEW CAB, 飛びVIN#
456	135	08713	GA2WXTXHL4M	414	141	40	TRIM	1314	4A4AP4AU4EE027410	EE027410		Old CAB
454	133	08714	GA2WXTXHZL4M	414	143	40	TRIM	1314	4A4AR4AU3EE027411	EE027411		Old CAB
420	99	08717	GA2WXTXHZL4M	414	213	40	TRIM	1314	4A4AR4AU9EE027414	EE027414		Old CAB
459	138	08726	GA2WXTMHL4M	414	138	40	TRIM	1314	4A4AP3AU6EE027418	EE027418		Old CAB
335	14	08727	GA2WXTMHL4M	415	112	40	TRIM	1314	4A4AP3AU8EE027419	EE027419	US	Un sequential VIN# = NEW CAB, 飛びVIN#
451	130	08728	GA2WXTXHZL4M	414	152	40	TRIM	1314	4A4AR4AU4EE027420	EE027420		Old CAB
384	63	08731	GA2WXTXHZL4M	415	23	40	TRIM	1314	4A4AR4AU6EE027421	EE027421	US	Un sequential VIN# = NEW CAB, 飛びVIN#
461	140	08732	GA2WXTMHL4M	414	135	40	TRIM	1314	4A4AP3AU8EE027422	EE027422		Old CAB
443	122	08733	GA2WXTMHL4M	414	165	40	TRIM	1314	4A4AP3AUXEE027423	EE027423		Old CAB
419	98	08734	GA2WXTXHZL4M	414	215	40	TRIM	1314	4A4AR4AU1EE027424	EE027424		Old CAB
458	137	08738	GA2WXTXHL4M	414	139	40	TRIM	1314	4A4AP4AU6EE027425	EE027425		Old CAB
453	132	08739	GA2WXTXHL4M	414	147	40	TRIM	1314	4A4AP4AU8EE027426	EE027426		Old CAB
375	54	08740	GA2WXTXHZL4M	415	37	40	TRIM	1314	4A4AR4AU7EE027427	EE027427	US	Un sequential VIN# = NEW CAB, 飛びVIN#
457	136	08741	GA2WXTXHZL4M	414	140	40	TRIM	1314	4A4AR4AU9EE027428	EE027428		Old CAB
455	134	08742	GA2WXTXHL4M	414	142	40	TRIM	1314	4A4AP4AU3EE027429	EE027429		Old CAB
446	125	08746	GA2WXTXHZL4M	414	161	40	TRIM	1314	4A4AR4AU7EE027430	EE027430		Old CAB
452	131	08747	GA2WXTXHZL4M	414	148	40	TRIM	1314	4A4AR4AU9EE027431	EE027431		Old CAB
437	116	08750	GA2WXTXHL4M	414	173	40	TRIM	1314	4A4AP4AU3EE027432	EE027432		Old CAB
448	127	08751	GA2WXTXHZL4M	414	158	40	TRIM	1314	4A4AR4AU2EE027433	EE027433		Old CAB
418	97	08752	GA2WXTMHL4M	414	219	40	TRIM	1314	4A4AP3AU4EE027434	EE027434		Old CAB
417	96	08753	GA2WXTMHL4M	414	221	40	TRIM	1314	4A4AP3AU6EE027435	EE027435		Old CAB
435	114	08755	GA2WXTMHL4M	414	177	40	TRIM	1314	4A4AP3AU8EE027436	EE027436		Old CAB
450	129	08758	GA2WXTXHZL4M	414	156	40	TRIM	1314	4A4AR4AUXEE027437	EE027437		Old CAB
439	118	08763	GA2WXTXHZL4M	414	169	40	TRIM	1314	4A4AR4AU1EE027438	EE027438		Old CAB
445	124	08765	GA2WXTXHZL4M	414	162	40	TRIM	1314	4A4AR4AU3EE027439	EE027439		Old CAB
424	103	08767	GA2WXNSHL4M	414	201	40	TRIM	1314	4A4AP3AUXEE027440	EE027440		Old CAB
434	113	08768	GA2WXTXHZL4M	414	180	40	TRIM	1314	4A4AR4AU1EE027441	EE027441		Old CAB
444	123	08771	GA2WXTXHZL4M	414	164	40	TRIM	1314	4A4AR4AU3EE027442	EE027442		Old CAB
442	121	08772	GA2WXTMHL4M	414	166	40	TRIM	1314	4A4AP3AU5EE027443	EE027443		Old CAB
441	120	08774	GA2WXTXHZL4M	414	167	40	TRIM	1314	4A4AR4AU7EE027444	EE027444		Old CAB
431	110	08778	GA2WXTXHL4M	414	185	40	TRIM	1314	4A4AP4AU1EE027445	EE027445		Old CAB
440	119	08779	GA2WXTXHZL4M	414	168	40	TRIM	1314	4A4AR4AU0EE027446	EE027446		Old CAB
389	68	08782	GA2WXTXHZL4M	415	17	40	TRIM	1314	4A4AR4AU2EE027447	EE027447	US	Un sequential VIN# = NEW CAB, 飛びVIN#
386	65	08784	GA2WXTXHL4M	415	21	40	TRIM	1314	4A4AP4AU7EE027448	EE027448	US	Un sequential VIN# = NEW CAB, 飛びVIN#
429	108	08785	GA2WXTXHZL4M	414	189	40	TRIM	1314	4A4AR4AU6EE027449	EE027449		Old CAB
421	100	08787	GA2WXTXHZL4M	414	211	40	TRIM	1314	4A4AR4AU2EE027450	EE027450		Old CAB
415	94	08788	GA2WXTMHL4M	414	224	40	TRIM	1314	4A4AP3AU4EE027451	EE027451		Old CAB
436	115	08790	GA2WXTXHL4M	414	176	40	TRIM	1314	4A4AP4AU9EE027452	EE027452		Old CAB
427	106	08792	GA2WXTXHZL4M	414	193	40	TRIM	1314	4A4AR4AU8EE027453	EE027453		Old CAB

連番	##STN	SNO	MODEL	Date	SEQ	YR	Line	PART	VIN	simple VIN		
385	64	08793	GA2WXTXHL4M	415	22	40	TRIM	1314	4A4AP4AU2EE027454	EE027454	US	Un sequential VIN# = NEW CAB, 飛びVIN#
382	61	08795	GA2WXTXHL4M	415	27	40	TRIM	1314	4A4AP4AU4EE027455	EE027455	US	Un sequential VIN# = NEW CAB, 飛びVIN#
425	104	08796	GA2WXTXHZL4M	414	197	40	TRIM	1314	4A4AR4AU3EE027456	EE027456		Old CAB
380	59	08799	GA2WXTXHZL4M	415	29	40	TRIM	1314	4A4AR4AU5EE027457	EE027457	US	Un sequential VIN# = NEW CAB, 飛びVIN#
432	111	08802	GA2WXTXHZL4M	414	184	40	TRIM	1314	4A4AR4AU7EE027458	EE027458		Old CAB
423	102	08804	GA2WXTXHL4M	414	205	40	TRIM	1314	4A4AP4AU1EE027459	EE027459		Old CAB
406	85	08806	GA2WXTXHL4M	414	238	40	TRIM	1314	4A4AP4AU8EE027460	EE027460		Old CAB
379	58	08808	GA2WXTXHZL4M	415	30	40	TRIM	1314	4A4AR4AU7EE027461	EE027461	US	Un sequential VIN# = NEW CAB, 飛びVIN#
368	47	08809	GA2WXTXHZL4M	415	51	40	TRIM	1314	4A4AR4AU9EE027462	EE027462	US	Un sequential VIN# = NEW CAB, 飛びVIN#
395	74	08810	GA2WXTXHL4M	415	9	40	TRIM	1314	4A4AP4AU3EE027463	EE027463	US	Un sequential VIN# = NEW CAB, 飛びVIN#
369	48	08811	GA2WXTXHL4M	415	49	40	TRIM	1314	4A4AP4AU5EE027464	EE027464	US	Un sequential VIN# = NEW CAB, 飛びVIN#
392	71	08814	GA2WXTXHZL4M	415	12	40	TRIM	1314	4A4AR4AU4EE027465	EE027465	US	Un sequential VIN# = NEW CAB, 飛びVIN#
393	72	08815	GA2WXTXHZL4M	415	11	40	TRIM	1314	4A4AR4AU6EE027466	EE027466	US	Un sequential VIN# = NEW CAB, 飛びVIN#
428	107	08816	GA2WXTMHL4M	414	192	40	TRIM	1314	4A4AP3AU8EE027467	EE027467		Old CAB
416	95	08819	GA2WXTXHZL4M	414	222	40	TRIM	1314	4A4AR4AUXEE027468	EE027468		Old CAB
378	57	08820	GA2WXTMHL4M	415	31	40	TRIM	1314	4A4AP3AU1EE027469	EE027469	US	Un sequential VIN# = NEW CAB, 飛びVIN#
286	4	08823	GA2WXTXHLFCS	415	17	40	PREP.	1314	4A4LM41U9EE027470	EE027470	US	Un sequential VIN# = NEW CAB, 飛びVIN#
414	93	08824	GA2WXTXHLFCS	414	227	40	TRIM	1314	4A4LM41U0EE027471	EE027471		Old CAB
287	1	08825	GA2WXTXHZL4M	415	16	40	PREP.	1314	4A4AR4AU1EE027472	EE027472	US	Un sequential VIN# = NEW CAB, 飛びVIN#
412	91	08830	GA2WXTMHL4M	414	230	40	TRIM	1314	4A4AP3AU3EE027473	EE027473		Old CAB
405	84	08831	GA2WXTMHL4M	414	239	40	TRIM	1314	4A4AP3AU5EE027474	EE027474		Old CAB
292	7	08832	GA2WXTMHL4M	415	20	40	REPAIR	1314	4A4AP3AU7EE027475	EE027475	US	Un sequential VIN# = NEW CAB, 飛びVIN#
409	88	08836	GA2WXTXHZL4M	414	234	40	TRIM	1314	4A4AR4AU9EE027476	EE027476		Old CAB
407	86	08843	GA2WXTMHL4M	414	236	40	TRIM	1314	4A4AP3AU0EE027477	EE027477		Old CAB
291	4	08844	GA2WXTMHL4M	414	40	40	REPAIR	1314	4A4AP3AU2EE027478	EE027478	US	Un sequential VIN# = NEW CAB, 飛びVIN#
403	82	08849	GA2WXTXHLFCS	414	241	40	TRIM	1314	4A4LM41U5EE027479	EE027479		Old CAB
401	80	08851	GA2WXTXHZL4M	415	1	40	TRIM	1314	4A4AR4AU0EE027480	EE027480	US	All new CAB from here.
313	6	08855	GA2WXTXHLFCS	415	133	40	DELAY-1	1314	4A4LM41U3EE027481	EE027481	US	
397	76	08858	GA2WXTXHL4M	415	6	40	TRIM	1314	4A4AP4AU7EE027482	EE027482	US	
390	69	08868	GA2WXTMHL4M	415	16	40	TRIM	1314	4A4AP3AU6EE027483	EE027483	US	
365	44	08869	GA2WXTMHL4M	415	59	40	TRIM	1314	4A4AP3AU8EE027484	EE027484	US	
290	3	08871	GA2WXTMHL4M	415	23	40	REPAIR	1314	4A4AP3AUXEE027485	EE027485	US	
294	10	08872	GA2WXTMHL4M	415	17	40	REPAIR	1314	4A4AP3AU1EE027486	EE027486	US	
377	56	08881	GA2WXNSHL4M	415	34	40	TRIM	1314	4A4AP3AU3EE027487	EE027487	US	
373	52	08894	GA2WXTMHL4M	415	40	40	TRIM	1314	4A4AP3AU5EE027488	EE027488	US	
374	53	08895	GA2WXTMHL4M	415	39	40	TRIM	1314	4A4AP3AU7EE027489	EE027489	US	
289	2	08898	GA2WXTMHL4M	415	24	40	REPAIR	1314	4A4AP3AU3EE027490	EE027490	US	
367	46	08905	GA2WXTMHL4M	415	56	40	TRIM	1314	4A4AP3AU5EE027491	EE027491	US	
364	43	08909	GA2WXTMHL4M	415	61	40	TRIM	1314	4A4AP3AU7EE027492	EE027492	US	
353	32	08922	GA2WXTXHL4M	415	73	40	TRIM	1314	4A4AP4AU1EE027493	EE027493	US	
326	5	08923	GA2WXTXHLFCS	415	125	40	TRIM	1314	4A4LM41U1EE027494	EE027494	US	
354	33	08931	GA2WXTXHLFCS	415	72	40	TRIM	1314	4A4LM41U3EE027495	EE027495	US	
350	29	08939	GA2WXTXHLFCS	415	78	40	TRIM	1314	4A4LM41U5EE027496	EE027496	US	
339	18	08940	GA2WXTXHLFCS	415	101	40	TRIM	1314	4A4LM41U7EE027497	EE027497	US	
343	22	08942	GA2WXTXHL4M	415	96	40	TRIM	1314	4A4AP4AU0EE027498	EE027498	US	
340	19	08948	GA2WXNSHL4M	415	99	40	TRIM	1314	4A4AP3AUXEE027499	EE027499	US	
332	11	08957	GA2WXTXHL4M	415	116	40	TRIM	1314	4A4AP4AU5EE027500	EE027500	US	
331	10	08962	GA2WXTXHL4M	415	117	40	TRIM	1314	4A4AP4AU7EE027501	EE027501	US	
329	8	08963	GA2WXTXHL4M	415	119	40	TRIM	1314	4A4AP4AU9EE027502	EE027502	US	

連番	##STN	SNO	MODEL	Date	SEQ	YR	Line	PART	VIN	simple VIN		
327	6	08970	GA2WXTXHL4M	415	121	40	TRIM	1314	4A4AP4AU0EE027503	EE027503	US	
323	2	08976	GA2WXTXHL4M	415	130	40	TRIM	1314	4A4AP4AU2EE027504	EE027504	US	
319	4	08977	GA2WXTXHL4M	415	128	40	TRIM	1314	4A4AP4AU4EE027505	EE027505	US	
318	3	08985	GA2WXTXHL4M	415	129	40	TRIM	1314	4A4AP4AU6EE027506	EE027506	US	
316	1	08986	GA2WXTXHL4M	415	131	40	TRIM	1314	4A4AP4AU8EE027507	EE027507	US	
308	12	08994	GA2WXTXHL4M	415	122	40	DE-MASK	1314	4A4AP4AUXEE027508	EE027508	US	
304	8	08996	GA2WXTXHL4M	415	127	40	DE-MASK	1314	4A4AP4AU1EE027509	EE027509	US	
305	9	08997	GA2WXTXHL4M	415	126	40	DE-MASK	1314	4A4AP4AU8EE027510	EE027510	US	
299	3	09000	GA2WXTXHL4M	415	148	40	DE-MASK	1314	4A4AP4AUXEE027511	EE027511	US	
303	7	09003	GA2WXTXHL4M	415	131	40	DE-MASK	1314	4A4AP4AU1EE027512	EE027512	US	
288	1	09010	GA2WXTXHL4M	415	26	40	REPAIR	1314	4A4AP4AU3EE027513	EE027513	US	
300	4	09011	GA2WXTXHL4M	415	147	40	DE-MASK	1314	4A4AP4AU5EE027514	EE027514	US	
279	23	09016	GA2WXTXHLFCS	415	150	40	INSPECTION	1314	4A4LM41U5EE027515	EE027515	US	
270	1	09024	GA2WXTXHL4M	415	152	40	INSPECTION	1314	4A4AP4AU9EE027516	EE027516	US	
260	17	09025	GA2WXTXHL4M	415	128	40	TOP	1314	4A4AP4AU0EE027517	EE027517	US	
277	17	09027	GA2WXTXHLFCS	415	145	40	INSPECTION	1314	4A4LM41U0EE027518	EE027518	US	
271	3	09033	GA2WXTXHLFCS	415	149	40	INSPECTION	1314	4A4LM41U2EE027519	EE027519	US	
272	6	09034	GA2WXTXHLFCS	415	155	40	INSPECTION	1314	4A4LM41U9EE027520	EE027520	US	
250	7	09044	GA2WXTXHLFCS	415	146	40	TOP	1314	4A4LM41U0EE027521	EE027521	US	
269	26	09045	GA2WXTXHLFCS	415	114	40	TOP	1314	4A4LM41U2EE027522	EE027522	US	
263	20	09047	GA2WXTXHLFCS	415	120	40	TOP	1314	4A4LM41U4EE027523	EE027523	US	
266	23	09048	GA2WXTXHLFCS	415	117	40	TOP	1314	4A4LM41U6EE027524	EE027524	US	
261	18	09053	GA2WXTXHL4M	415	124	40	TOP	1314	4A4AP4AUXEE027525	EE027525	US	
258	15	09060	GA2WXTXHL4M	415	130	40	TOP	1314	4A4AP4AU1EE027526	EE027526	US	
255	12	09065	GA2WXTXHLFCS	415	136	40	TOP	1314	4A4LM41U1EE027527	EE027527	US	
256	13	09066	GA2WXTXHLFCS	415	135	40	TOP	1314	4A4LM41U3EE027528	EE027528	US	
47	34	09075	GA2WXTMHL4M	411	149	40	MAIN-ON	1314	4A4AP3AU4EE027529	EE027529	US	
249	6	09076	GA2WXTMHL4M	415	147	40	TOP	1314	4A4AP3AU0EE027530	EE027530	US	
246	3	09078	GA2WXTMHZL4M	415	154	40	TOP	1314	4A4AR3AUXEE027531	EE027531	US	
228	9	09079	GA2WXTMHL4M	415	122	40	BLACK	1314	4A4AP3AU4EE027532	EE027532	US	
245	2	09081	GA2WXTMHL4M	415	155	40	TOP	1314	4A4AP3AU6EE027533	EE027533	US	
254	11	09082	GA2WXTMHZL4M	415	137	40	TOP	1314	4A4AR3AU5EE027534	EE027534	US	
240	26	09085	GA2WXTMHL4M	415	109	40	BLACK	1314	4A4AP3AUXEE027535	EE027535	US	
244	1	09087	GA2WXTXHL4M	415	158	40	TOP	1314	4A4AP4AU4EE027536	EE027536	US	
233	19	09089	GA2WXTMHZL4M	415	146	40	BLACK	1314	4A4AR3AU0EE027537	EE027537	US	
227	9	09090	GA2WXTMHL4M	415	151	40	BLACK	1314	4A4AP3AU5EE027538	EE027538	US	
231	16	09091	GA2WXTMHL4M	415	118	40	BLACK	1314	4A4AP3AU7EE027539	EE027539	US	
229	12	09094	GA2WXTMHL4M	415	120	40	BLACK	1314	4A4AP3AU3EE027540	EE027540	US	
230	14	09096	GA2WXTMHL4M	415	119	40	BLACK	1314	4A4AP3AU5EE027541	EE027541	US	
225	5	09097	GA2WXTMHL4M	415	154	40	BLACK	1314	4A4AP3AU7EE027542	EE027542	US	
226	7	09099	GA2WXTXHL4M	415	124	40	BLACK	1314	4A4AP4AU1EE027543	EE027543	US	
224	3	09101	GA2WXTMHZL4M	415	156	40	BLACK	1314	4A4AR3AU8EE027544	EE027544	US	
223	1	09102	GA2WXTMHL4M	415	129	40	BLACK	1314	4A4AP3AU2EE027545	EE027545	US	
243	31	09103	GA2WXTMHL4M	415	132	40	BLACK	1314	4A4AP3AU4EE027546	EE027546	US	
242	30	09106	GA2WXTMHL4M	415	133	40	BLACK	1314	4A4AP3AU6EE027547	EE027547	US	
239	26	09108	GA2WXTMHL4M	415	138	40	BLACK	1314	4A4AP3AU8EE027548	EE027548	US	
241	29	09109	GA2WXTMHL4M	415	135	40	BLACK	1314	4A4AP3AUXEE027549	EE027549	US	
237	24	09111	GA2WXTXHZL4M	415	141	40	BLACK	1314	4A4AR4AU6EE027550	EE027550	US	
238	25	09114	GA2WXTMHL4M	415	140	40	BLACK	1314	4A4AP3AU8EE027551	EE027551	US	

連番	##STN	SNO	MODEL	Date	SEQ	YR	Line	PART	VIN	simple VIN		
234	21	09117	GA2WXTMHL4M	415	145	40	BLACK	1314	4A4AP3AUXEE027552	EE027552	US	
235	22	09118	GA2WXTMHZL4M	415	143	40	BLACK	1314	4A4AR3AU9EE027553	EE027553	US	
232	16	09119	GA2WXTMHZL4M	415	147	40	BLACK	1314	4A4AR3AU0EE027554	EE027554	US	
221	60	09124	GA2WXTXHZL4M	415	61	40	SURFACER	1314	4A4AR4AU5EE027555	EE027555	US	
218	57	09126	GA2WXTMHL4M	415	64	40	SURFACER	1314	4A4AP3AU7EE027556	EE027556	US	
222	61	09127	GA2WXTMHL4M	415	59	40	SURFACER	1314	4A4AP3AU9EE027557	EE027557	US	
219	58	09129	GA2WXTMHL4M	415	63	40	SURFACER	1314	4A4AP3AU0EE027558	EE027558	US	
216	55	09132	GA2WXTMHL4M	415	67	40	SURFACER	1314	4A4AP3AU2EE027559	EE027559	US	
215	54	09135	GA2WXTXHZL4M	415	69	40	SURFACER	1314	4A4AR4AU9EE027560	EE027560	US	
213	52	09137	GA2WXTMHL4M	415	71	40	SURFACER	1314	4A4AP3AU0EE027561	EE027561	US	
212	51	09138	GA2WXTMHL4M	415	72	40	SURFACER	1314	4A4AP3AU2EE027562	EE027562	US	
210	49	09141	GA2WXTMHL4M	415	76	40	SURFACER	1314	4A4AP3AU4EE027563	EE027563	US	
209	48	09147	GA2WXTXHZL4M	415	78	40	SURFACER	1314	4A4AR4AU6EE027564	EE027564	US	
208	47	09148	GA2WXTMHL4M	415	80	40	SURFACER	1314	4A4AP3AU8EE027565	EE027565	US	
206	45	09149	GA2WXTMHL4M	415	82	40	SURFACER	1314	4A4AP3AUXEE027566	EE027566	US	
203	42	09153	GA2WXTXHZL4M	415	89	40	SURFACER	1314	4A4AR4AU1EE027567	EE027567	US	
202	41	09158	GA2WXTXHZL4M	415	93	40	SURFACER	1314	4A4AR4AU3EE027568	EE027568	US	
198	37	09160	GA2WXTMHL4M	415	99	40	SURFACER	1314	4A4AP3AU5EE027569	EE027569	US	
201	40	09161	GA2WXTMHZL4M	415	94	40	SURFACER	1314	4A4AR3AU9EE027570	EE027570	US	
200	39	09162	GA2WXTMHZL4M	415	97	40	SURFACER	1314	4A4AR3AU0EE027571	EE027571	US	
196	35	09165	GA2WXTMHL4M	415	104	40	SURFACER	1314	4A4AP3AU5EE027572	EE027572	US	
199	38	09166	GA2WXTMHL4M	415	98	40	SURFACER	1314	4A4AP3AU7EE027573	EE027573	US	
197	36	09167	GA2WXTMHZL4M	415	100	40	SURFACER	1314	4A4AR3AU6EE027574	EE027574	US	
194	33	09170	GA2WXTXHZL4M	415	107	40	SURFACER	1314	4A4AR4AU0EE027575	EE027575	US	
192	31	09172	GA2WXTMHL4M	415	110	40	SURFACER	1314	4A4AP3AU2EE027576	EE027576	US	
195	34	09173	GA2WXTMHZL4M	415	106	40	SURFACER	1314	4A4AR3AU1EE027577	EE027577	US	
193	32	09174	GA2WXTMHZL4M	415	109	40	SURFACER	1314	4A4AR3AU3EE027578	EE027578	US	
190	29	09177	GA2WXTMHL4M	415	112	40	SURFACER	1314	4A4AP3AU8EE027579	EE027579	US	
186	25	09178	GA2WXTMHL4M	415	120	40	SURFACER	1314	4A4AP3AU4EE027580	EE027580	US	
191	30	09179	GA2WXTMHZL4M	415	111	40	SURFACER	1314	4A4AR3AU3EE027581	EE027581	US	
46	33	09182	GA2WXTXHZL4M	414	92	40	MAIN-ON	1314	4A4AR4AU8EE027582	EE027582	US	
189	28	09184	GA2WXTMHL4M	415	116	40	SURFACER	1314	4A4AP3AUXEE027583	EE027583	US	
187	26	09185	GA2WXTMHZL4M	415	118	40	SURFACER	1314	4A4AR3AU9EE027584	EE027584	US	
188	27	09186	GA2WXTMHZL4M	415	117	40	SURFACER	1314	4A4AR3AU0EE027585	EE027585	US	
184	23	09189	GA2WXNSHL4M	415	123	40	SURFACER	1314	4A4AP3AU5EE027586	EE027586	US	
185	24	09190	GA2WXTMHL4M	415	122	40	SURFACER	1314	4A4AP3AU7EE027587	EE027587	US	
183	22	09191	GA2WXTMHZL4M	415	125	40	SURFACER	1314	4A4AR3AU6EE027588	EE027588	US	
182	21	09194	GA2WXTXHZL4M	415	126	40	SURFACER	1314	4A4AR4AU0EE027589	EE027589	US	
180	19	09195	GA2WXTMHZL4M	415	130	40	SURFACER	1314	4A4AR3AU4EE027590	EE027590	US	
179	18	09197	GA2WXTMHL4M	415	132	40	SURFACER	1314	4A4AP3AU9EE027591	EE027591	US	
181	20	09198	GA2WXTMHL4M	415	129	40	SURFACER	1314	4A4AP3AU0EE027592	EE027592	US	
171	10	09200	GA2WXTMHZL4M	415	146	40	SURFACER	1314	4A4AR3AUXEE027593	EE027593	US	
178	17	09202	GA2WXTMHL4M	415	133	40	SURFACER	1314	4A4AP3AU4EE027594	EE027594	US	
177	16	09203	GA2WXTMHZL4M	415	135	40	SURFACER	1314	4A4AR3AU3EE027595	EE027595	US	
176	15	09206	GA2WXTXHZL4M	415	136	40	SURFACER	1314	4A4AR4AU8EE027596	EE027596	US	
173	12	09207	GA2WXTMHZL4M	415	142	40	SURFACER	1314	4A4AR3AU7EE027597	EE027597	US	
175	14	09209	GA2WXTMHL4M	415	138	40	SURFACER	1314	4A4AP3AU1EE027598	EE027598	US	
170	9	09211	GA2WXTMHL4M	415	147	40	SURFACER	1314	4A4AP3AU3EE027599	EE027599	US	
174	13	09212	GA2WXTXHZL4M	415	140	40	SURFACER	1314	4A4AR4AU6EE027600	EE027600	US	

連番	##STN	SNO	MODEL	Date	SEQ	YR	Line	PART	VIN	simple VIN		
172	11	09214	GA2WXTMHL4M	415	143	40	SURFACER	1314	4A4AP3AU8EE027601	EE027601	US	
169	8	09215	GA2WXTXHZL4M	415	148	40	SURFACER	1314	4A4AR4AUXEE027602	EE027602	US	
168	7	09216	GA2WXTMHL4M	415	151	40	SURFACER	1314	4A4AP3AU1EE027603	EE027603	US	
139	13	09218	GA2WXTXHZL4M	415	49	40	SEALING-1	1314	4A4AR4AU3EE027604	EE027604	US	
167	6	09220	GA2WXTMHL4M	415	152	40	SURFACER	1314	4A4AP3AU5EE027605	EE027605	US	
166	5	09222	GA2WXTXHZL4M	415	153	40	SURFACER	1314	4A4AR4AU7EE027606	EE027606	US	
164	3	09225	GA2WXTXHZL4M	415	155	40	SURFACER	1314	4A4AR4AU9EE027607	EE027607	US	
163	2	09228	GA2WXTXHZL4M	415	157	40	SURFACER	1314	4A4AR4AU0EE027608	EE027608	US	
141	15	09230	GA2WXTXHZL4M	415	45	40	SEALING-1	1314	4A4AR4AU2EE027609	EE027609	US	
154	12	09233	GA2WXTXHL4M	415	59	40	SEALING-2	1314	4A4AP4AU1EE027610	EE027610	US	
161	19	09234	GA2WXTXHZL4M	415	47	40	SEALING-2	1314	4A4AR4AU0EE027611	EE027611	US	
160	18	09236	GA2WXTXHL4M	415	49	40	SEALING-2	1314	4A4AP4AU5EE027612	EE027612	US	
159	17	09237	GA2WXTXHZL4M	415	50	40	SEALING-2	1314	4A4AR4AU4EE027613	EE027613	US	
158	16	09240	GA2WXTXHZL4M	415	51	40	SEALING-2	1314	4A4AR4AU6EE027614	EE027614	US	
140	14	09241	GA2WXTXHZL4M	415	48	40	SEALING-1	1314	4A4AR4AU8EE027615	EE027615	US	
157	15	09246	GA2WXTMHZL4M	415	56	40	SEALING-2	1314	4A4AR3AU7EE027616	EE027616	US	
137	11	09247	GA2WXNSHL4M	415	53	40	SEALING-1	1314	4A4AP3AU1EE027617	EE027617	US	
153	11	09248	GA2WXTMHL4M	415	60	40	SEALING-2	1314	4A4AP3AU3EE027618	EE027618	US	
130	4	09249	GA2WXTMHZL4M	415	63	40	SEALING-1	1314	4A4AR3AU2EE027619	EE027619	US	
145	3	09250	GA2WXTMHZL4M	415	73	40	SEALING-2	1314	4A4AR3AU9EE027620	EE027620	US	
138	12	09252	GA2WXTXHL4M	415	51	40	SEALING-1	1314	4A4AP4AU6EE027621	EE027621	US	
155	13	09255	GA2WXTXHL4M	415	58	40	SEALING-2	1314	4A4AP4AU8EE027622	EE027622	US	
136	10	09257	GA2WXTXHL4M	415	54	40	SEALING-1	1314	4A4AP4AUXEE027623	EE027623	US	
152	10	09260	GA2WXTXHL4M	415	62	40	SEALING-2	1314	4A4AP4AU1EE027624	EE027624	US	
133	7	09263	GA2WXTXHL4M	415	58	40	SEALING-1	1314	4A4AP4AU3EE027625	EE027625	US	
131	5	09267	GA2WXTXHL4M	415	60	40	SEALING-1	1314	4A4AP4AU5EE027626	EE027626	US	
151	9	09268	GA2WXTXHL4M	415	66	40	SEALING-2	1314	4A4AP4AU7EE027627	EE027627	US	
150	8	09273	GA2WXTMHZL4M	415	68	40	SEALING-2	1314	4A4AR3AU3EE027628	EE027628	US	
127	1	09274	GA2WXTMHZL4M	415	67	40	SEALING-1	1314	4A4AR3AU5EE027629	EE027629	US	
147	5	09276	GA2WXTMHL4M	415	71	40	SEALING-2	1314	4A4AP3AU4EE027630	EE027630	US	
148	6	09277	GA2WXTXHL4M	415	70	40	SEALING-2	1314	4A4AP4AU9EE027631	EE027631	US	
129	3	09278	GA2WXTMHL4M	415	65	40	SEALING-1	1314	4A4AP3AU8EE027632	EE027632	US	
128	2	09279	GA2WXTMHZL4M	415	66	40	SEALING-1	1314	4A4AR3AU7EE027633	EE027633	US	
146	4	09281	GA2WXTXHL4M	415	72	40	SEALING-2	1314	4A4AP4AU4EE027634	EE027634	US	
144	2	09284	GA2WXTXHL4M	415	74	40	SEALING-2	1314	4A4AP4AU6EE027635	EE027635	US	
126	12	09286	GA2WXTXHL4M	415	118	40	E.D.	1314	4A4AP4AU8EE027636	EE027636	US	
109	49	09287	GA2WXTXHL4M	415	70	40	PAINT	1314	4A4AP4AUXEE027637	EE027637	US	
124	10	09290	GA2WXTXHL4M	415	120	40	E.D.	1314	4A4AP4AU1EE027638	EE027638	US	
123	9	09295	GA2WXTMHZL4M	415	125	40	E.D.	1314	4A4AR3AU8EE027639	EE027639	US	
121	7	09301	GA2WXTXHZL4M	415	132	40	E.D.	1314	4A4AR4AU7EE027640	EE027640	US	
118	4	09305	GA2WXTMHL4M	415	136	40	E.D.	1314	4A4AP3AU9EE027641	EE027641	US	
117	3	09306	GA2WXTMHL4M	415	137	40	E.D.	1314	4A4AP3AU0EE027642	EE027642	US	
115	1	09310	GA2WXTMHL4M	415	141	40	E.D.	1314	4A4AP3AU2EE027643	EE027643	US	
111	51	09316	GA2WXTXHLFCS	415	66	40	PAINT	1314	4A4LM41U5EE027644	EE027644	US	
104	44	09318	GA2WXTXHLFCS	415	79	40	PAINT	1314	4A4LM41U7EE027645	EE027645	US	
60	12	09319	GA2WXTXHLFCS	415	45	40	METAL	1314	4A4LM41U9EE027646	EE027646	US	
106	46	09321	GA2WXTXHLFCS	415	76	40	PAINT	1314	4A4LM41U0EE027647	EE027647	US	
92	32	09325	GA2WXTXHLFCS	415	98	40	PAINT	1314	4A4LM41U2EE027648	EE027648	US	
107	47	09328	GA2WXTXHLFCS	415	73	40	PAINT	1314	4A4LM41U4EE027649	EE027649	US	

連番	##STN	SNO	MODEL	Date	SEQ	YR	Line	PART	VIN	simple VIN		
95	35	09333	GA2WXTMHL4M	415	94	40	PAINT	1314	4A4AP3AUXEE027650	EE027650	US	
103	43	09334	GA2WXTMHL4M	415	80	40	PAINT	1314	4A4AP3AU1EE027651	EE027651	US	
102	42	09335	GA2WXTMHL4M	415	81	40	PAINT	1314	4A4AP3AU3EE027652	EE027652	US	
75	15	09346	GA2WXNSHL4M	415	128	40	PAINT	1314	4A4AP3AU5EE027653	EE027653	US	
97	37	09347	GA2WXTMHL4M	415	92	40	PAINT	1314	4A4AP3AU7EE027654	EE027654	US	
96	36	09348	GA2WXTMHL4M	415	93	40	PAINT	1314	4A4AP3AU9EE027655	EE027655	US	
94	34	09349	GA2WXTMHZL4M	415	95	40	PAINT	1314	4A4AR3AU8EE027656	EE027656	US	
93	33	09350	GA2WXTMHZL4M	415	97	40	PAINT	1314	4A4AR3AUXEE027657	EE027657	US	
91	31	09351	GA2WXTMHL4M	415	99	40	PAINT	1314	4A4AP3AU4EE027658	EE027658	US	
90	30	09352	GA2WXTMHL4M	415	100	40	PAINT	1314	4A4AP3AU6EE027659	EE027659	US	
88	28	09360	GA2WXTMHL4M	415	109	40	PAINT	1314	4A4AP3AU2EE027660	EE027660	US	
87	27	09361	GA2WXTMHL4M	415	110	40	PAINT	1314	4A4AP3AU4EE027661	EE027661	US	
86	26	09362	GA2WXTMHZL4M	415	111	40	PAINT	1314	4A4AR3AU3EE027662	EE027662	US	
84	24	09363	GA2WXTMHZL4M	415	113	40	PAINT	1314	4A4AR3AU5EE027663	EE027663	US	
83	23	09364	GA2WXTMHL4M	415	114	40	PAINT	1314	4A4AP3AUXEE027664	EE027664	US	
82	22	09365	GA2WXTMHL4M	415	116	40	PAINT	1314	4A4AP3AU1EE027665	EE027665	US	
77	17	09372	GA2WXTMHL4M	415	126	40	PAINT	1314	4A4AP3AU3EE027666	EE027666	US	
80	20	09373	GA2WXTMHL4M	415	123	40	PAINT	1314	4A4AP3AU5EE027667	EE027667	US	
79	19	09374	GA2WXTMHZL4M	415	124	40	PAINT	1314	4A4AR3AU4EE027668	EE027668	US	
78	18	09375	GA2WXTMHZL4M	415	125	40	PAINT	1314	4A4AR3AU6EE027669	EE027669	US	
45	32	09376	GA2WXTMHL4M	415	54	40	MAIN-ON	1314	4A4AP3AU5EE027670	EE027670	US	
76	16	09377	GA2WXTMHL4M	415	127	40	PAINT	1314	4A4AP3AU7EE027671	EE027671	US	
73	13	09384	GA2WXNSHL4M	415	133	40	PAINT	1314	4A4AP3AU9EE027672	EE027672	US	
72	12	09385	GA2WXTMHL4M	415	134	40	PAINT	1314	4A4AP3AU0EE027673	EE027673	US	
68	8	09386	GA2WXTMHZL4M	415	140	40	PAINT	1314	4A4AR3AUXEE027674	EE027674	US	
70	10	09388	GA2WXTMHL4M	415	136	40	PAINT	1314	4A4AP3AU4EE027675	EE027675	US	
69	9	09389	GA2WXTMHL4M	415	137	40	PAINT	1314	4A4AP3AU6EE027676	EE027676	US	
66	6	09394	GA2WXTMHL4M	415	143	40	PAINT	1314	4A4AP3AU8EE027677	EE027677	US	
62	2	09395	GA2WXTMHL4M	415	147	40	PAINT	1314	4A4AP3AUXEE027678	EE027678	US	
65	5	09396	GA2WXTMHL4M	415	144	40	PAINT	1314	4A4AP3AU1EE027679	EE027679	US	
64	4	09397	GA2WXTMHL4M	415	145	40	PAINT	1314	4A4AP3AU8EE027680	EE027680	US	
63	3	09398	GA2WXTMHZL4M	415	146	40	PAINT	1314	4A4AR3AU7EE027681	EE027681	US	
61	1	09399	GA2WXTMHZL4M	415	148	40	PAINT	1314	4A4AR3AU9EE027682	EE027682	US	
59	11	09407	GA2WXTMHZL4M	415	132	40	METAL	1314	4A4AR3AU0EE027683	EE027683	US	
58	10	09408	GA2WXTMHZL4M	415	133	40	METAL	1314	4A4AR3AU2EE027684	EE027684	US	
57	9	09409	GA2WXTXHL4M	415	134	40	METAL	1314	4A4AP4AUXEE027685	EE027685	US	
44	31	09410	GA2WXTMHL4M	415	88	40	MAIN-ON	1314	4A4AP3AU9EE027686	EE027686	US	
56	8	09411	GA2WXTMHL4M	415	136	40	METAL	1314	4A4AP3AU0EE027687	EE027687	US	
55	7	09412	GA2WXTMHL4M	415	137	40	METAL	1314	4A4AP3AU2EE027688	EE027688	US	
54	6	09413	GA2WXTMHZL4M	415	138	40	METAL	1314	4A4AR3AU1EE027689	EE027689	US	
52	4	09418	GA2WXTMHL4M	415	143	40	METAL	1314	4A4AP3AU0EE027690	EE027690	US	
51	3	09419	GA2WXTMHZL4M	415	144	40	METAL	1314	4A4AR3AUXEE027691	EE027691	US	
50	2	09420	GA2WXTMHZL4M	415	145	40	METAL	1314	4A4AR3AU1EE027692	EE027692	US	
49	1	09421	GA2WXTXHL4M	415	146	40	METAL	1314	4A4AP4AU9EE027693	EE027693	US	
43	30	09422	GA2WXTMHL4M	415	100	40	MAIN-ON	1314	4A4AP3AU8EE027694	EE027694	US	
42	29	09423	GA2WXTMHL4M	415	101	40	MAIN-ON	1314	4A4AP3AUXEE027695	EE027695	US	
41	28	09428	GA2WXTMHZL4M	415	106	40	MAIN-ON	1314	4A4AR3AU9EE027696	EE027696	US	
40	27	09429	GA2WXTMHL4M	415	107	40	MAIN-ON	1314	4A4AP3AU3EE027697	EE027697	US	
39	26	09430	GA2WXTMHL4M	415	108	40	MAIN-ON	1314	4A4AP3AU5EE027698	EE027698	US	

連番	##STN	SNO	MODEL	Date	SEQ	YR	Line	PART	VIN	simple VIN		
38	25	09431	GA2WXTMHZL4M	415	109	40	MAIN-ON	1314	4A4AR3AU4EE027699	EE027699	US	
37	24	09435	GA2WXTXHZL4M	415	113	40	MAIN-ON	1314	4A4AR4AUXEE027700	EE027700	US	
36	23	09436	GA2WXTMHZL4M	415	114	40	MAIN-ON	1314	4A4AR3AU9EE027701	EE027701	US	
35	22	09437	GA2WXTMHL4M	415	115	40	MAIN-ON	1314	4A4AP3AU3EE027702	EE027702	US	
34	21	09441	GA2WXTMHZL4M	415	119	40	MAIN-ON	1314	4A4AR3AU2EE027703	EE027703	US	
33	20	09442	GA2WXTMHZL4M	415	120	40	MAIN-ON	1314	4A4AR3AU4EE027704	EE027704	US	
32	19	09443	GA2WXTMHL4M	415	121	40	MAIN-ON	1314	4A4AP3AU9EE027705	EE027705	US	
31	18	09445	GA2WXTXHL4M	415	123	40	MAIN-ON	1314	4A4AP4AU3EE027706	EE027706	US	
28	15	09450	GA2WXTMHL4M	415	128	40	MAIN-ON	1314	4A4AP3AU2EE027707	EE027707	US	
27	14	09453	GA2WXTMHZL4M	415	131	40	MAIN-ON	1314	4A4AR3AU1EE027708	EE027708	US	
26	13	09454	GA2WXTMHZL4M	415	132	40	MAIN-ON	1314	4A4AR3AU3EE027709	EE027709	US	
25	12	09455	GA2WXTMHL4M	415	133	40	MAIN-ON	1314	4A4AP3AU2EE027710	EE027710	US	
23	10	09457	GA2WXTXHZL4M	415	135	40	MAIN-ON	1314	4A4AR4AU4EE027711	EE027711	US	
22	9	09458	GA2WXTMHL4M	415	136	40	MAIN-ON	1314	4A4AP3AU6EE027712	EE027712	US	
21	8	09459	GA2WXTMHL4M	415	137	40	MAIN-ON	1314	4A4AP3AU8EE027713	EE027713	US	
20	7	09460	GA2WXTMHL4M	415	138	40	MAIN-ON	1314	4A4AP3AUXEE027714	EE027714	US	
19	6	09465	GA2WXTMHZL4M	415	143	40	MAIN-ON	1314	4A4AR3AU9EE027715	EE027715	US	
18	5	09466	GA2WXTMHZL4M	415	144	40	MAIN-ON	1314	4A4AR3AU0EE027716	EE027716	US	
17	4	09467	GA2WXTMHL4M	415	145	40	MAIN-ON	1314	4A4AP3AU5EE027717	EE027717	US	
16	3	09468	GA2WXTMHL4M	415	146	40	MAIN-ON	1314	4A4AP3AU7EE027718	EE027718	US	
15	2	09469	GA2WXTXHZL4M	415	147	40	MAIN-ON	1314	4A4AR4AU9EE027719	EE027719	US	
14	1	09472	GA2WXTMHL4M	415	150	40	MAIN-ON	1314	4A4AP3AU5EE027720	EE027720	US	
13	9	09474	GA2WXTMHZL4M	415	136	40	UNDERBODY	1314	4A4AR3AU4EE027721	EE027721	US	
12	8	09477	GA2WXTMHZL4M	415	139	40	UNDERBODY	1314	4A4AR3AU6EE027722	EE027722	US	
11	7	09478	GA2WXTMHZL4M	415	140	40	UNDERBODY	1314	4A4AR3AU8EE027723	EE027723	US	
10	6	09479	GA2WXTMHL4M	415	141	40	UNDERBODY	1314	4A4AP3AU2EE027724	EE027724	US	
8	4	09482	GA2WXTMHL4M	415	144	40	UNDERBODY	1314	4A4AP3AU4EE027725	EE027725	US	
7	3	09484	GA2WXTMHL4M	415	146	40	UNDERBODY	1314	4A4AP3AU6EE027726	EE027726	US	
5	1	09489	GA2WXTMHZL4M	415	151	40	UNDERBODY	1314	4A4AR3AU5EE027727	EE027727	US	
4	4	09490	GA2WXTMHZL4M	415	151	40	WELD-ON	1314	4A4AR3AU7EE027728	EE027728	US	
3	3	09491	GA2WXTMHL4M	415	152	40	WELD-ON	1314	4A4AP3AU1EE027729	EE027729	US	
2	2	09492	GA2WXTMHL4M	415	153	40	WELD-ON	1314	4A4AP3AU8EE027730	EE027730	US	
1	1	09493	GA2WXTXHZL4M	415	154	40	WELD-ON	1314	4A4AR4AUXEE027731	EE027731	US	
422	101	08251	GA2WXTXHZL5M	414	209	40	TRIM	1314	4A4AJ4AUXEE606144	EE606144		
285	2	08574	GA2WXTMHZL5M	411	64	40	PREP.	1314	4A4AJ3AU2EE606200	EE606200	CANADA	新CAB CANADA向で最も古いVIN#
449	128	08668	GA2WXTMHZL5M	414	157	40	TRIM	1314	4A4AJ3AU7EE606211	EE606211		
426	105	08697	GA2WXTMHZL5M	414	196	40	TRIM	1314	4A4AJ3AUXEE606218	EE606218		
447	126	08759	GA2WXTXHZL5M	414	159	40	TRIM	1314	4A4AJ4AU0EE606220	EE606220		
310	1	08777	GA2WXTMHL5M	415	141	40	DELAY-1	1314	4A4AH3AU5EE606221	EE606221	CANADA	飛びVIN#
410	89	08801	GA2WXNSHL5M	414	233	40	TRIM	1314	4A4AH3AU7EE606222	EE606222		
411	90	08828	GA2WXTXHZL5M	414	232	40	TRIM	1314	4A4AJ4AU6EE606223	EE606223		
413	92	08829	GA2WXTXHZL5M	414	229	40	TRIM	1314	4A4AJ4AU8EE606224	EE606224		
394	73	08833	GA2WXTXHZL5M	415	10	40	TRIM	1314	4A4AJ4AUXEE606225	EE606225	CANADA	飛びVIN#
408	87	08842	GA2WXTXHZL5M	414	235	40	TRIM	1314	4A4AJ4AU1EE606226	EE606226		
402	81	08845	GA2WXTXHZL5M	414	242	40	TRIM	1314	4A4AJ4AU3EE606227	EE606227		
404	83	08846	GA2WXTXHZL5M	414	240	40	TRIM	1314	4A4AJ4AU5EE606228	EE606228		
400	79	08852	GA2WXTXHZL5M	415	3	40	TRIM	1314	4A4AJ4AU7EE606229	EE606229	CANADA	これ以降のVIN#は全て新
346	25	08856	GA2WXTXHZL5M	415	92	40	TRIM	1314	4A4AJ4AU3EE606230	EE606230	CANADA	
398	77	08857	GA2WXTMHL5M	415	5	40	TRIM	1314	4A4AH3AU8EE606231	EE606231	CANADA	

連番	##STN	SNO	MODEL	Date	SEQ	YR	Line	PART	VIN	simple VIN		
396	75	08859	GA2WXTXHZL5M	415	7	40	TRIM	1314	4A4AJ4AU7EE606232	EE606232	CANADA	
293	9	08863	GA2WXTXHZL5M	415	18	40	REPAIR	1314	4A4AJ4AU9EE606233	EE606233	CANADA	
366	45	08867	GA2WXTXHZL5M	415	58	40	TRIM	1314	4A4AJ4AU0EE606234	EE606234	CANADA	
391	70	08870	GA2WXTXHZL5M	415	13	40	TRIM	1314	4A4AJ4AU2EE606235	EE606235	CANADA	
359	38	08873	GA2WXTXHZL5M	415	67	40	TRIM	1314	4A4AJ4AU4EE606236	EE606236	CANADA	
388	67	08879	GA2WXTXHZL5M	415	18	40	TRIM	1314	4A4AJ4AU6EE606237	EE606237	CANADA	
387	66	08880	GA2WXTXHZL5M	415	20	40	TRIM	1314	4A4AJ4AU8EE606238	EE606238	CANADA	
383	62	08883	GA2WXTMHL5M	415	25	40	TRIM	1314	4A4AH3AU2EE606239	EE606239	CANADA	
312	4	08884	GA2WXTXHZL5M	415	136	40	DELAY-1	1314	4A4AJ4AU6EE606240	EE606240	CANADA	
347	26	08887	GA2WXTXHZL5M	415	88	40	TRIM	1314	4A4AJ4AU8EE606241	EE606241	CANADA	
376	55	08888	GA2WXTXHZL5M	415	36	40	TRIM	1314	4A4AJ4AUXEE606242	EE606242	CANADA	
370	49	08890	GA2WXNSHL5M	415	43	40	TRIM	1314	4A4AH3AU4EE606243	EE606243	CANADA	
296	12	08893	GA2WXTXHZL5M	415	11	40	REPAIR	1314	4A4AJ4AU3EE606244	EE606244	CANADA	
371	50	08896	GA2WXTXHZL5M	415	42	40	TRIM	1314	4A4AJ4AU5EE606245	EE606245	CANADA	
372	51	08897	GA2WXTXHZL5M	415	41	40	TRIM	1314	4A4AJ4AU7EE606246	EE606246	CANADA	
283	4	08904	GA2WXTXHZL5M	415	30	40	PAINT	1314	4A4AJ4AU9EE606247	EE606247	CANADA	
357	36	08907	GA2WXTXHZL5M	415	69	40	TRIM	1314	4A4AJ4AU0EE606248	EE606248	CANADA	
356	35	08908	GA2WXTXHZL5M	415	70	40	TRIM	1314	4A4AJ4AU2EE606249	EE606249	CANADA	
315	10	08910	GA2WXTMHL5M	415	134	40	DELAY-1	1314	4A4AH3AU1EE606250	EE606250	CANADA	
362	41	08911	GA2WXTMHL5M	415	64	40	TRIM	1314	4A4AH3AU3EE606251	EE606251	CANADA	
355	34	08915	GA2WXTXHZL5M	415	71	40	TRIM	1314	4A4AJ4AU2EE606252	EE606252	CANADA	
295	11	08919	GA2WXTXHZL5M	415	14	40	REPAIR	1314	4A4AJ4AU4EE606253	EE606253	CANADA	
361	40	08920	GA2WXTXHZL5M	415	65	40	TRIM	1314	4A4AJ4AU6EE606254	EE606254	CANADA	
360	39	08921	GA2WXTMHL5M	415	66	40	TRIM	1314	4A4AH3AU0EE606255	EE606255	CANADA	
358	37	08924	GA2WXTXHZL5M	415	68	40	TRIM	1314	4A4AJ4AUXEE606256	EE606256	CANADA	
344	23	08927	GA2WXTXHZL5M	415	95	40	TRIM	1314	4A4AJ4AU1EE606257	EE606257	CANADA	
352	31	08930	GA2WXTXHZL5M	415	74	40	TRIM	1314	4A4AJ4AU3EE606258	EE606258	CANADA	
345	24	08934	GA2WXTXHZL5M	415	93	40	TRIM	1314	4A4AJ4AU5EE606259	EE606259	CANADA	
351	30	08938	GA2WXTXHZL5M	415	75	40	TRIM	1314	4A4AJ4AU1EE606260	EE606260	CANADA	
348	27	08941	GA2WXTXHZL5M	415	83	40	TRIM	1314	4A4AJ4AU3EE606261	EE606261	CANADA	
349	28	08943	GA2WXTXHZL5M	415	82	40	TRIM	1314	4A4AJ4AU5EE606262	EE606262	CANADA	
338	17	08947	GA2WXTXHZL5M	415	103	40	TRIM	1314	4A4AJ4AU7EE606263	EE606263	CANADA	
341	20	08949	GA2WXTMHL5M	415	98	40	TRIM	1314	4A4AH3AU1EE606264	EE606264	CANADA	
337	16	08950	GA2WXTXHZL5M	415	104	40	TRIM	1314	4A4AJ4AU0EE606265	EE606265	CANADA	
342	21	08951	GA2WXTXHZL5M	415	97	40	TRIM	1314	4A4AJ4AU2EE606266	EE606266	CANADA	
333	12	08955	GA2WXTMHL5M	415	115	40	TRIM	1314	4A4AH3AU7EE606267	EE606267	CANADA	
334	13	08958	GA2WXTXHZL5M	415	114	40	TRIM	1314	4A4AJ4AU6EE606268	EE606268	CANADA	
284	1	08961	GA2WXTXHZL5M	415	119	40	PREP.	1314	4A4AJ4AU8EE606269	EE606269	CANADA	
330	9	08964	GA2WXTXHZL5M	415	118	40	TRIM	1314	4A4AJ4AU4EE606270	EE606270	CANADA	
328	7	08967	GA2WXTXHZL5M	415	120	40	TRIM	1314	4A4AJ4AU6EE606271	EE606271	CANADA	
324	3	08968	GA2WXTXHZL5M	415	129	40	TRIM	1314	4A4AJ4AU8EE606272	EE606272	CANADA	
325	4	08975	GA2WXTXHZL5M	415	127	40	TRIM	1314	4A4AJ4AUXEE606273	EE606273	CANADA	
322	1	08978	GA2WXTXHZL5M	415	131	40	TRIM	1314	4A4AJ4AU1EE606274	EE606274	CANADA	
311	3	08981	GA2WXTXHZL5M	415	140	40	DELAY-1	1314	4A4AJ4AU3EE606275	EE606275	CANADA	
309	13	08982	GA2WXTXHZL5M	415	118	40	DE-MASK	1314	4A4AJ4AU5EE606276	EE606276	CANADA	
317	2	08984	GA2WXNSHL5M	415	130	40	TRIM	1314	4A4AH3AUXEE606277	EE606277	CANADA	
321	1	08987	GA2WXTXHZL5M	415	123	40	Trim	1314	4A4AJ4AU9EE606278	EE606278	CANADA	
320	1	08988	GA2WXTXHZL5M	415	119	40	ST	1314	4A4AJ4AU0EE606279	EE606279	CANADA	
306	10	08995	GA2WXTXHZL5M	415	125	40	DE-MASK	1314	4A4AJ4AU7EE606280	EE606280	CANADA	

連番	##STN	SNO	MODEL	Date	SEQ	YR	Line	PART	VIN	simple VIN		
307	11	08998	GA2WXTXHZL5M	415	124	40	DE-MASK	1314	4A4AJ4AU9EE606281	EE606281	CANADA	
302	6	09001	GA2WXTXHZL5M	415	136	40	DE-MASK	1314	4A4AJ4AU0EE606282	EE606282	CANADA	
282	3	09004	GA2WXTXHZL5M	415	134	40	PAINT	1314	4A4AJ4AU2EE606283	EE606283	CANADA	
301	5	09008	GA2WXTXHZL5M	415	137	40	DE-MASK	1314	4A4AJ4AU4EE606284	EE606284	CANADA	
280	1	09012	GA2WXTXHZL5M	415	143	40	PAINT	1314	4A4AJ4AU6EE606285	EE606285	CANADA	
281	2	09015	GA2WXTXHZL5M	415	142	40	PAINT	1314	4A4AJ4AU8EE606286	EE606286	CANADA	
297	1	09018	GA2WXTXHZL5M	415	150	40	DE-MASK	1314	4A4AJ4AUXEE606287	EE606287	CANADA	
298	2	09019	GA2WXTXHZL5M	415	149	40	DE-MASK	1314	4A4AJ4AU1EE606288	EE606288	CANADA	
278	20	09026	GA2WXTXHZL5M	415	144	40	INSPECTION	1314	4A4AJ4AU3EE606289	EE606289	CANADA	
268	25	09028	GA2WXNSHL5M	415	115	40	TOP	1314	4A4AH3AU2EE606290	EE606290	CANADA	
274	10	09029	GA2WXTXHZL5M	415	153	40	INSPECTION	1314	4A4AJ4AU1EE606291	EE606291	CANADA	
276	14	09032	GA2WXTXHZL5M	415	146	40	INSPECTION	1314	4A4AJ4AU3EE606292	EE606292	CANADA	
275	10	09035	GA2WXTXHZL5M	415	153	40	INSPECTION	1314	4A4AJ4AU5EE606293	EE606293	CANADA	
273	6	09041	GA2WXTXHZL5M	415	154	40	INSPECTION	1314	4A4AJ4AU7EE606294	EE606294	CANADA	
267	24	09042	GA2WXTXHZL5M	415	116	40	TOP	1314	4A4AJ4AU9EE606295	EE606295	CANADA	
264	21	09046	GA2WXTXHZL5M	415	119	40	TOP	1314	4A4AJ4AU0EE606296	EE606296	CANADA	
265	22	09049	GA2WXTXHZL5M	415	118	40	TOP	1314	4A4AJ4AU2EE606297	EE606297	CANADA	
262	19	09054	GA2WXTXHZL5M	415	121	40	TOP	1314	4A4AJ4AU4EE606298	EE606298	CANADA	
248	5	09058	GA2WXTXHZL5M	415	152	40	TOP	1314	4A4AJ4AU6EE606299	EE606299	CANADA	
259	16	09059	GA2WXTXHZL5M	415	129	40	TOP	1314	4A4AJ4AU9EE606300	EE606300	CANADA	
252	9	09063	GA2WXTXHZL5M	415	144	40	TOP	1314	4A4AJ4AU0EE606301	EE606301	CANADA	
251	8	09064	GA2WXTXHZL5M	415	145	40	TOP	1314	4A4AJ4AU2EE606302	EE606302	CANADA	
253	10	09067	GA2WXNSHL5M	415	139	40	TOP	1314	4A4AH3AU7EE606303	EE606303	CANADA	
247	4	09069	GA2WXTXHZL5M	415	153	40	TOP	1314	4A4AJ4AU6EE606304	EE606304	CANADA	
257	14	09070	GA2WXTXHZL5M	415	131	40	TOP	1314	4A4AJ4AU8EE606305	EE606305	CANADA	
236	23	09113	GA2WXNSHL5M	415	142	40	BLACK	1314	4A4AH3AU2EE606306	EE606306	CANADA	
85	25	09125	GA2WXTMHZL5M	415	112	40	PAINT	1314	4A4AJ3AU9EE606307	EE606307	CANADA	
220	59	09130	GA2WXTMHZL5M	415	62	40	SURFACER	1314	4A4AJ3AU0EE606308	EE606308	CANADA	
217	56	09133	GA2WXTMHZL5M	415	66	40	SURFACER	1314	4A4AJ3AU2EE606309	EE606309	CANADA	
214	53	09139	GA2WXTMHZL5M	415	70	40	SURFACER	1314	4A4AJ3AU9EE606310	EE606310	CANADA	
207	46	09142	GA2WXTMHZL5M	415	81	40	SURFACER	1314	4A4AJ3AU0EE606311	EE606311	CANADA	
211	50	09143	GA2WXTMHZL5M	415	74	40	SURFACER	1314	4A4AJ3AU2EE606312	EE606312	CANADA	
205	44	09152	GA2WXTMHZL5M	415	85	40	SURFACER	1314	4A4AJ3AU4EE606313	EE606313	CANADA	
204	43	09154	GA2WXNSHL5M	415	87	40	SURFACER	1314	4A4AH3AU1EE606314	EE606314	CANADA	
162	1	09221	GA2WXTMHL5M	415	159	40	SURFACER	1314	4A4AH3AU3EE606315	EE606315	CANADA	
165	4	09224	GA2WXTMHL5M	415	154	40	SURFACER	1314	4A4AH3AU5EE606316	EE606316	CANADA	
142	16	09231	GA2WXTMHL5M	415	42	40	SEALING-1	1314	4A4AH3AU7EE606317	EE606317	CANADA	
156	14	09254	GA2WXTXHZL5M	415	57	40	SEALING-2	1314	4A4AJ4AU6EE606318	EE606318	CANADA	
135	9	09258	GA2WXTXHZL5M	415	55	40	SEALING-1	1314	4A4AJ4AU8EE606319	EE606319	CANADA	
134	8	09261	GA2WXTXHZL5M	415	57	40	SEALING-1	1314	4A4AJ4AU4EE606320	EE606320	CANADA	
132	6	09265	GA2WXTXHZL5M	415	59	40	SEALING-1	1314	4A4AJ4AU6EE606321	EE606321	CANADA	
149	7	09275	GA2WXNSHL5M	415	69	40	SEALING-2	1314	4A4AH3AU0EE606322	EE606322	CANADA	
112	52	09282	GA2WXTXHZL5M	415	65	40	PAINT	1314	4A4AJ4AUXEE606323	EE606323	CANADA	
143	1	09285	GA2WXTXHZL5M	415	75	40	SEALING-2	1314	4A4AJ4AU1EE606324	EE606324	CANADA	
125	11	09288	GA2WXTXHZL5M	415	119	40	E.D.	1314	4A4AJ4AU3EE606325	EE606325	CANADA	
122	8	09298	GA2WXTMHZL5M	415	131	40	E.D.	1314	4A4AJ3AU2EE606326	EE606326	CANADA	
120	6	09302	GA2WXTMHZL5M	415	133	40	E.D.	1314	4A4AJ3AU4EE606327	EE606327	CANADA	
119	5	09304	GA2WXNSHL5M	415	135	40	E.D.	1314	4A4AH3AU1EE606328	EE606328	CANADA	
116	2	09308	GA2WXTMHZL5M	415	139	40	E.D.	1314	4A4AJ3AU8EE606329	EE606329	CANADA	

連番	##STN	SNO	MODEL	Date	SEQ	YR	Line	PART	VIN	simple VIN		
114	54	09313	GA2WXTXHZL5M	415	63	40	PAINT	1314	4A4AJ4AU7EE606330	EE606330	CANADA	
113	53	09314	GA2WXTXHZL5M	415	64	40	PAINT	1314	4A4AJ4AU9EE606331	EE606331	CANADA	
110	50	09323	GA2WXTXHZL5M	415	69	40	PAINT	1314	4A4AJ4AU0EE606332	EE606332	CANADA	
108	48	09326	GA2WXTXHZL5M	415	71	40	PAINT	1314	4A4AJ4AU2EE606333	EE606333	CANADA	
105	45	09332	GA2WXTXHZL5M	415	78	40	PAINT	1314	4A4AJ4AU4EE606334	EE606334	CANADA	
101	41	09337	GA2WXTXHZL5M	415	83	40	PAINT	1314	4A4AJ4AU6EE606335	EE606335	CANADA	
100	40	09338	GA2WXTXHZL5M	415	84	40	PAINT	1314	4A4AJ4AU8EE606336	EE606336	CANADA	
99	39	09341	GA2WXTXHZL5M	415	87	40	PAINT	1314	4A4AJ4AUXEE606337	EE606337	CANADA	
98	38	09345	GA2WXTXHZL5M	415	90	40	PAINT	1314	4A4AJ4AU1EE606338	EE606338	CANADA	
89	29	09357	GA2WXTXHZL5M	415	106	40	PAINT	1314	4A4AJ4AU3EE606339	EE606339	CANADA	
81	21	09369	GA2WXTXHZL5M	415	120	40	PAINT	1314	4A4AJ4AUXEE606340	EE606340	CANADA	
74	14	09381	GA2WXTXHZL5M	415	131	40	PAINT	1314	4A4AJ4AU1EE606341	EE606341	CANADA	
71	11	09387	GA2WXTMHZL5M	415	135	40	PAINT	1314	4A4AJ3AU0EE606342	EE606342	CANADA	
67	7	09393	GA2WXTXHZL5M	415	142	40	PAINT	1314	4A4AJ4AU5EE606343	EE606343	CANADA	
53	5	09417	GA2WXNSHL5M	415	142	40	METAL	1314	4A4AH3AUXEE606344	EE606344	CANADA	
30	17	09447	GA2WXTMHZL5M	415	125	40	MAIN-ON	1314	4A4AJ3AU6EE606345	EE606345	CANADA	
29	16	09448	GA2WXTMHZL5M	415	126	40	MAIN-ON	1314	4A4AJ3AU8EE606346	EE606346	CANADA	
24	11	09456	GA2WXNSHL5M	415	134	40	MAIN-ON	1314	4A4AH3AU5EE606347	EE606347	CANADA	
9	5	09481	GA2WXTXHZL5M	415	143	40	UNDERBODY	1314	4A4AJ4AU4EE606348	EE606348	CANADA	
6	2	09486	GA2WXTMHZL5M	415	148	40	UNDERBODY	1314	4A4AJ3AU3EE606349	EE606349	CANADA	

Attached sheet 2

Destination	Applicable manual	Pub. No.	Applicable title (INFO ID)	Contents
EU/ RUSSIA	2013 ASX Workshop Manual	CGAE13E1-CD(ENG) CGAF13E1-CD(FRE) CGAG13E1-CD(GER) CGAS13E1-CD(SPA) CGAI13E1-CD(ITA) RUSSIA:N/A	TRIM REMOVAL AND INSTALLATION (M521-00-112-03100-01)	Attached sheet 3 (1/5)～(4/5)
			CURTAIN AIRBAG MODULE(S) REMOVAL AND INSTALLATION (M524-01-350-66400-01)	Attached sheet 3 (5/5)
	2014 ASX Workshop Manual	CGAE14E1-CD(ENG) CGAF14E1-CD(FRE) CGAG14E1-CD(GER) CGAS14E1-CD(SPA) CGAI14E1-CD(ITA) RUSSIA:N/A	TRIM REMOVAL AND INSTALLATION (M521-00-112-03100-01)	Attached sheet 3 (1/5)～(4/5)
			CURTAIN AIRBAG MODULE(S) REMOVAL AND INSTALLATION (M524-01-350-66400-01)	Attached sheet 3 (5/5)
	2015 ASX Workshop Manual	CGAE15E1-CD(ENG) CGAF15E1-CD(FRE) CGAG15E1-CD(GER) CGAS15E1-CD(SPA) CGAI15E1-CD(ITA) RUSSIA:N/A	TRIM REMOVAL AND INSTALLATION (M521-00-112-03100-01)	Attached sheet 3 (1/5)～(4/5)
			CURTAIN AIRBAG MODULE(S) REMOVAL AND INSTALLATION (M524-01-350-77200-01)	Attached sheet 3 (5/5)
EXP/GCC	2013 ASX/ OUTLANDER SPORT Workshop Manual	PWPE1204R (ENG) PWPS1205R (SPA)	GENARAL INFORMATION (M521-00-011-46600-01)	Attached sheet 4 (1/10)
			FLONT FLOOR CONSOLE ASSEMBLY REMOVAL AND INSTALLATON (M521-00-520-12600-01 Added under)	Attached sheet 4 (2/10)～(6/10)
			GENARAL INFORMATION (M524-00-012-74700-01)	Attached sheet 4 (7/10)
			DRIVER’S AIRBAG MODULE INSPECTION (M524-04-760-29100-01 Added under)	Attached sheet 4 (8/10)～(10/10)
MMNA/ MEXICO	2011 Outlander Sport Service Manual A	MSCD-017B-2011 MEXICO:DRAFT A	TRIM REMOVAL AND INSTALLATION (M521-00-112-03100-01) A	Attached sheet 5 (1/4)～(3/4) A
			CURTAIN AIRBAG MODULE(S) REMOVAL AND INSTALLATION (M524-01-350-71600-01) A	Attached sheet 5 (4/4) A
	2012 Outlander Sport Service Manual A	MSCD-017B-2012 MEXICO:DRAFT A	TRIM REMOVAL AND INSTALLATION (M521-00-112-03100-01) A	Attached sheet 5 (1/4)～(3/4) A
			CURTAIN AIRBAG MODULE(S) REMOVAL AND INSTALLATION (M524-01-350-71600-01) A	Attached sheet 5 (4/4) A
	2013 Outlander Sport Service Manual	MSCD-017B-2013 MEXICO:DRAFT	TRIM REMOVAL AND INSTALLATION (M521-00-112-03100-01)	Attached sheet 5 (1/4)～(3/4)
			CURTAIN AIRBAG MODULE(S) REMOVAL AND INSTALLATION (M524-01-350-71600-01)	Attached sheet 5 (4/4)
	2014 Outlander Sport Service Manual	MSCD-017B-2014 MEXICO:DRAFT	TRIM REMOVAL AND INSTALLATION (M521-00-112-03100-01)	Attached sheet 5 (1/4)～(3/4)
			CURTAIN AIRBAG MODULE(S) REMOVAL AND INSTALLATION (M524-01-350-71600-01)	Attached sheet 5 (4/4)

Attached sheet 3 (1/5)

TRIMS

INTERIOR TRIM

REMOVAL AND INSTALLATION

M1521001102031

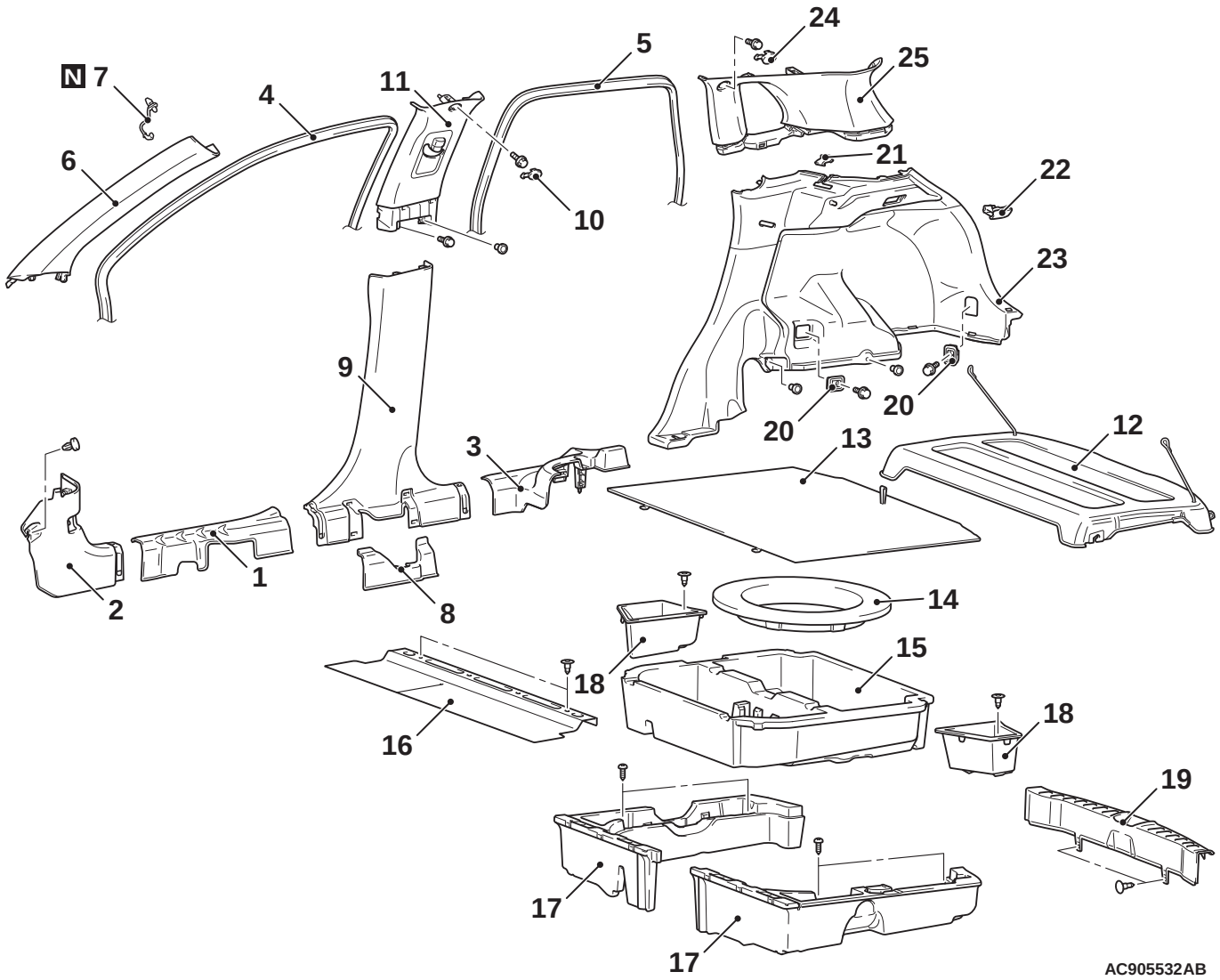

Cowl side trim removal steps
1. Front scuff plate
2. Cowl side trim

Rear scuff plate removal step
- Rear seat cushion <<B>>
3. Rear scuff plate

<Added>

Front pillar trim removal steps
4. Front door opening trim
6. Front pillar trim <<A>> >>A<<
7. Front pillar trim clip <<A>> >>A<<

Centre pillar trim removal steps
1. Front scuff plate
- Rear seat cushion
3. Rear scuff plate
4. Front door opening trim

<Added>
<Except for MMNA production>

Centre pillar trim removal steps
5. Rear door opening trim
8. Centre pillar cover inner
9. Centre pillar trim lower
10. Centre pillar trim cap
11. Centre pillar trim upper

Rear shelf trim removal step
12. Rear shelf trim

Cargo floor box removal steps
13. Cargo floor lid
14. Cargo floor pad <Vehicles with cargo floor pad>
15. Cargo floor box (centre) <Vehicles with cargo floor box (centre)>
16. Cargo floor board front
17. Cargo floor box
18. Cargo floor box (LH/RH)

Attached sheet 3 (2/5)

CLIP AND CLAW POSITIONS

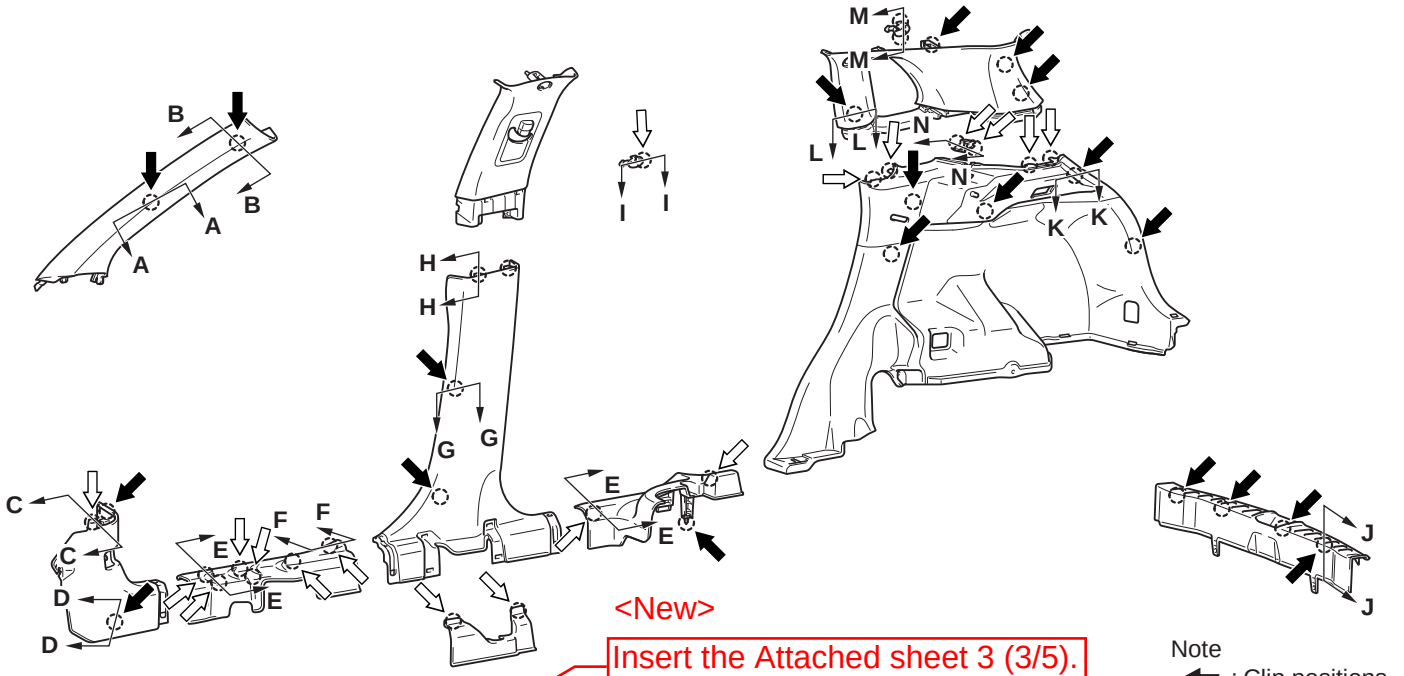

<New>

Insert the Attached sheet 3 (3/5).

<Old>

Note
: Clip positions
: Claw positions

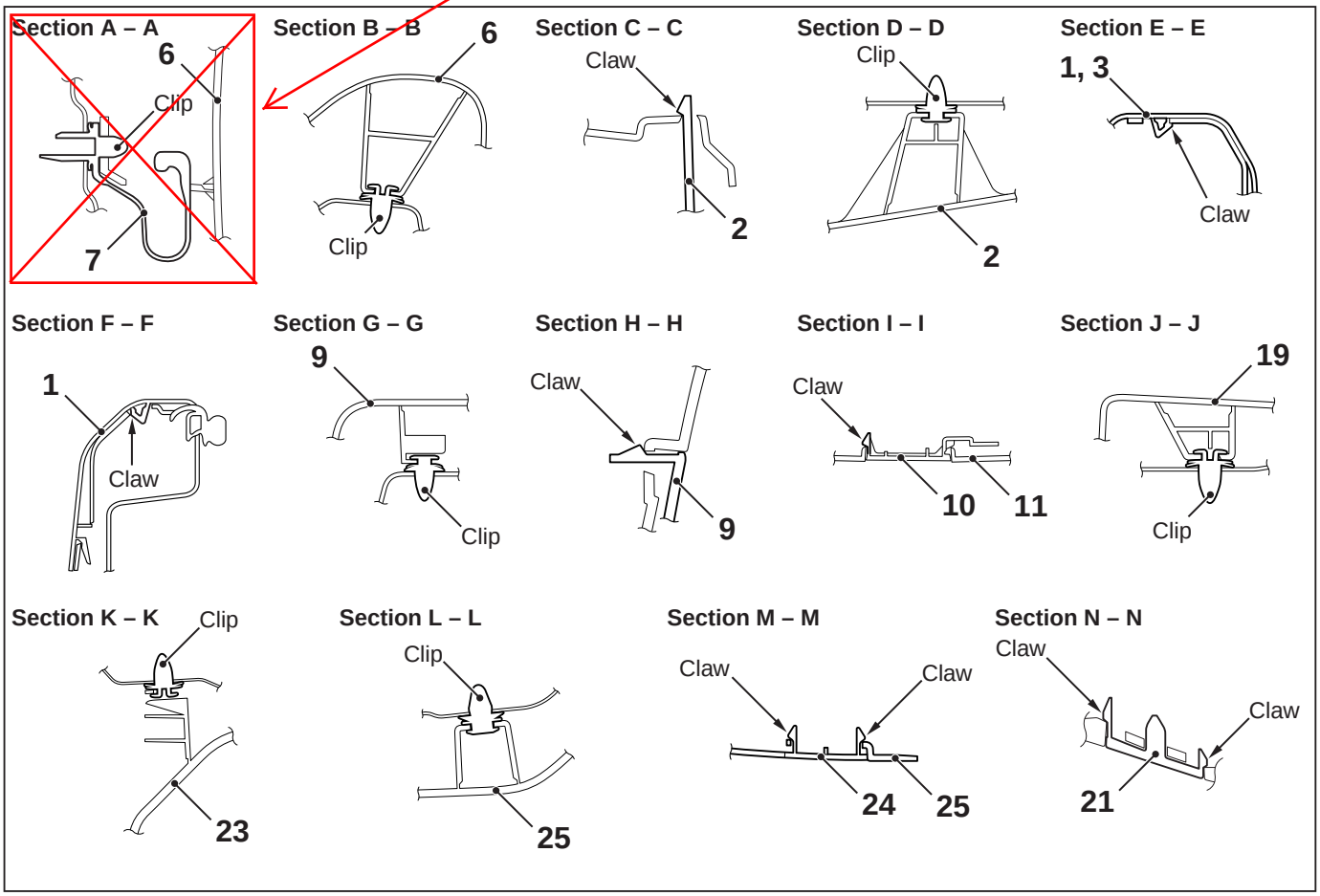

AC904458AB

NOTE: Each number in the illustration indicates a part number.

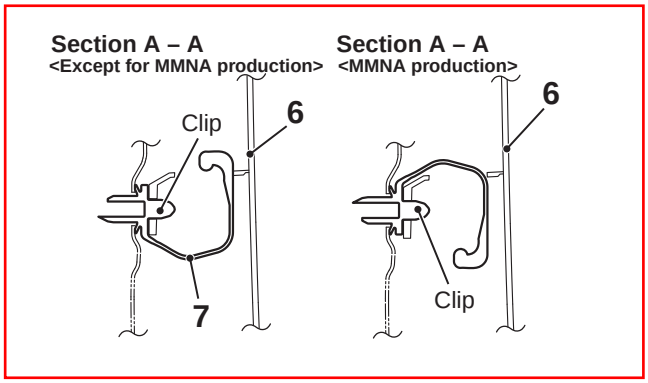
Section A – A
<Except for MMNA production>
Clip
6
7
Section A – A
<MMNA production>
6
Clip

<Added>
/FRONT PILLAR TRIM CLIP

Attached sheet 3 (4/5)

REMOVAL SERVICE POINTS

<<A>>FRONT PILLAR TRIM REMOVAL

<Old>

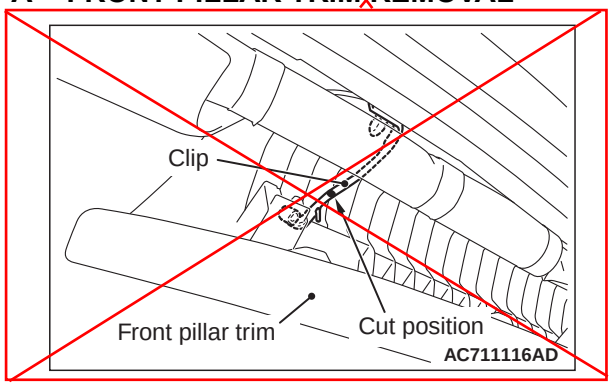

1. Pull down the front or rear pillar trim as shown in the figure.
2. Cut the clip at the cutting position shown in the figure, taking care not to damage the other components.
3. Remove the clip remaining on the front or rear pillar trim, taking care not to scratch the trim.
4. Remove the clip remaining on the vehicle side by breaking it to prevent damage to the flange of the clip mounting hole.

<New>

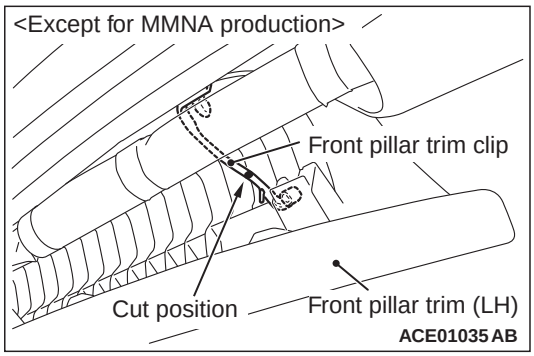

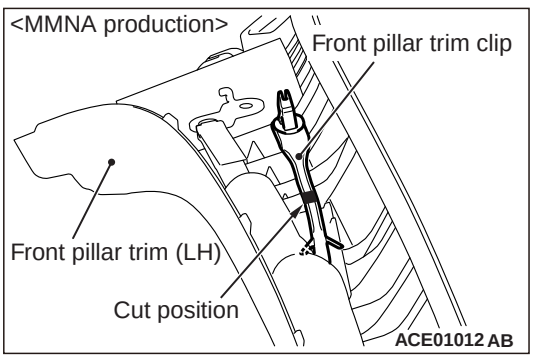

<<B>> CENTRE PILLAR TRIM CAP/QUARTER TRIM UPPER CAP REMOVAL

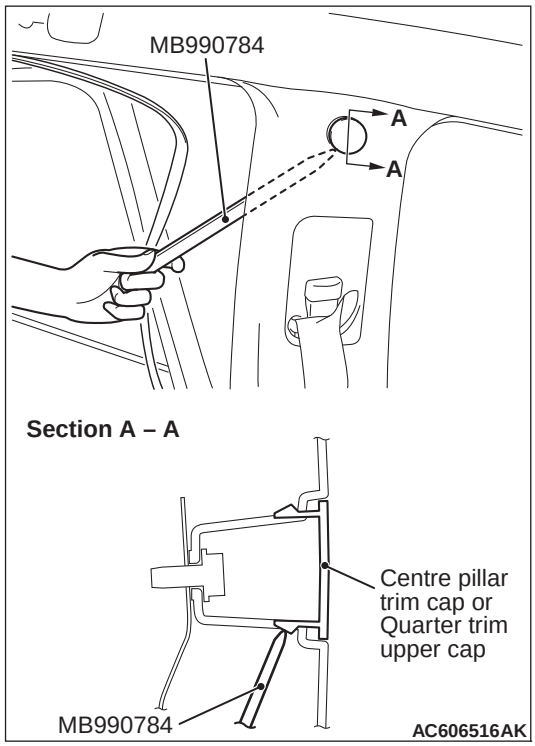

Remove the opening trim. Remove the trim cap by inserting the special tool ornament remover (MB990784) between the trim and body as shown in the illustration.

<Added>

INSTALLATION SERVICE POINT

>>A<< FRONT PILLAR TRIM/FRONT PILLAR TRIM CLIP INSTALLAION

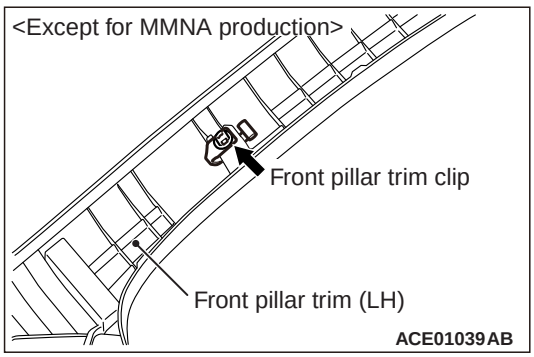

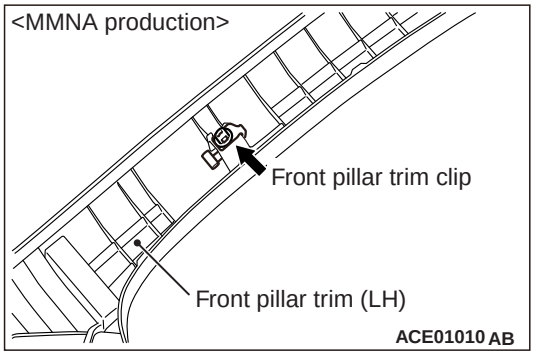

Make sure that the clip is installed in the correct direction.

Attached sheet 3 (5/5)

CURTAIN AIR BAG MODULE(S)

REMOVAL AND INSTALLATION

M1524013500664

⚠ CAUTION

- **Disconnect the negative (–) battery terminal and wait for 60 seconds or more before starting work. Insulate the disconnected (–) terminal by wrapping the tape (Refer to the item 5 of Service Precautions).**
- **Never attempt to disassemble or repair the air bag module. If faulty, replace it with new one(s).**
- **Handle the air bag module with sufficient caution, and do not drop the module or allow contact with water, oil, or others. If denting, cracking, or deformation is discovered, replace it with new one(s).**
- **Store the air bag module on a flat surface. Also, do not put anything on it.**
- **Do not store the air bag modules in a place more than 93°C.**
- **After the curtain air bag deployment, replace the curtain air bag module with a new part.**
- **Put on gloves and safety glasses when handling deployed air bags.**
- **When discarding the air bag module, make sure to deploy the air bag before the disposal.**

Pre-removal operation
- Turn the ignition switch to the LOCK (OFF) position.
- Disconnect the negative (–) battery terminal.

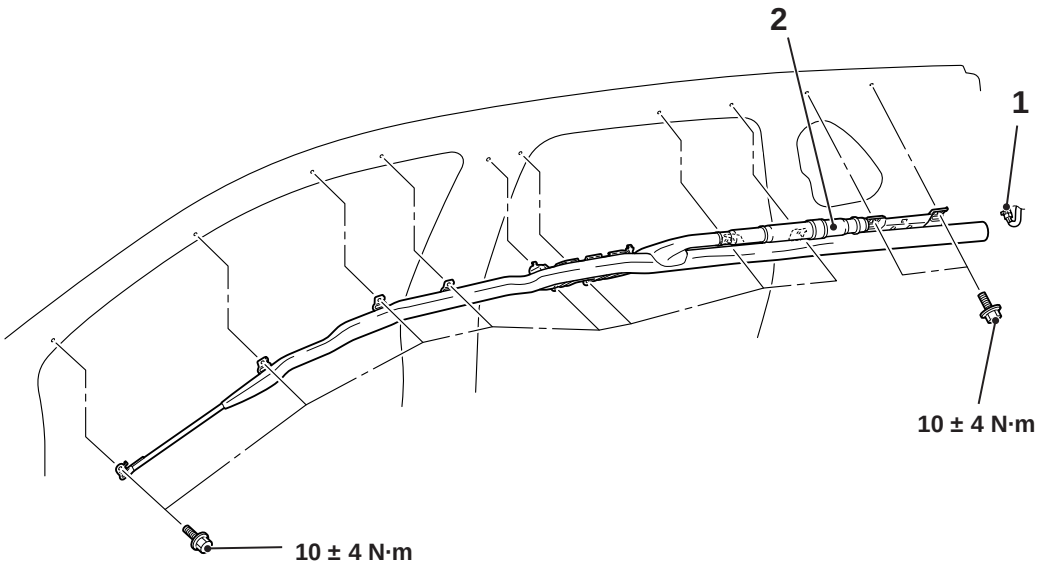

AC904712 AC

Removal steps
- Headlining (Refer to GROUP 52A – Headlining).

<<A>> 1. Curtain air bag module connector
<<B>> 2. Curtain air bag module

Installation steps

>>A<< • Pre-installation inspection
>>B<< 2. Curtain air bag module

<Added>

Installation steps (Continued)

>>C<< 1. Curtain air bag module connector
- Headlining (Refer to GROUP 52A – Headlining).

>>D<< • Post-installation inspection

NOTE: The figure shows the right curtain air bag module.

- **When the front pillar trim is installed after the air bag module has been installed, make sure that the its trim clip faces towards the right direction. (Refer to GROUP 52A - Interior trim)**

GENERAL INFORMATION

M1521000101466

OUTLINE OF CHANGES

- The gearshift 4WD switch has been changed, the service procedure has been established. The other service procedures are the same as before.
- The service procedures have been changed as the front pillar trim clip must be installed in the opposite direction on vehicles maufactured at MMNA.

<Added>

Attached sheet 4 (2/10)

Removal steps (Continued)

5. Gearshift 4WD switch <4WD>
6. Floor console panel
7. Gearshift lever cover assembly <M/T>
- Rear floor console assembly (Refer to).
- Shift panel (Refer to GROUP 23A – Transmission control).
8. Accessory socket assembly
9. Floor console front
- Inside transmission antenna assembly (front) (Refer to GROUP 42B – Outside Transmission Antenna Assembly, Inside Transmission Antenna Assembly, Receiver Antenna Module).
10. Floor console centre
11. Floor console trim plate bracket
12. Floor console bracket centre

Insert the Attached sheet 4 (3/10) to (6/10).

<Added>

Attached sheet 4 (3/10)

TRIMS

INTERIOR TRIM

REMOVAL AND INSTALLATION

M1521001102451

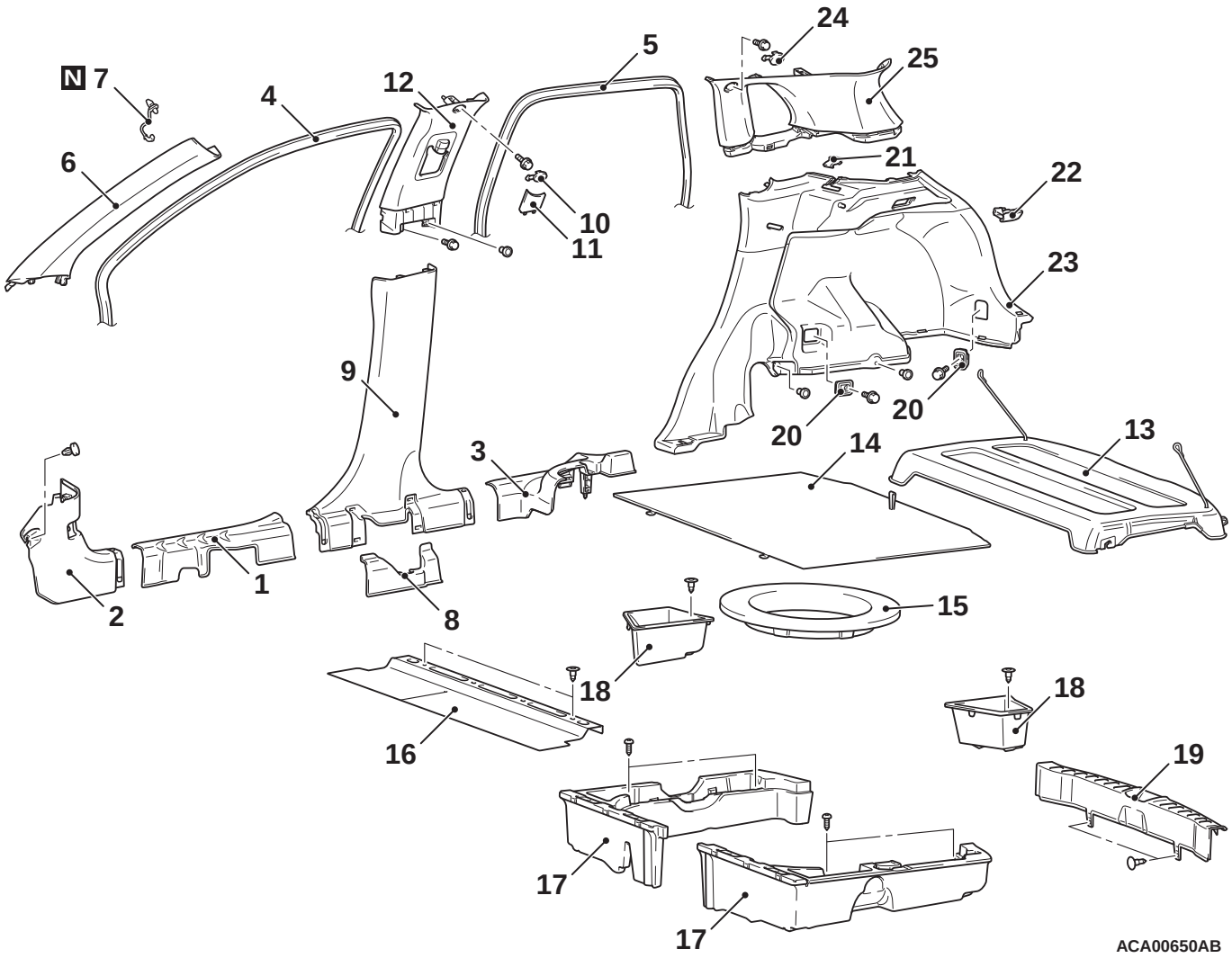

ACA00650AB

Cowl side trim removal steps

1. Front scuff plate
2. Cowl side trim

Rear scuff plate removal step

- Rear seat cushion

3. Rear scuff plate

<<A>> >>A<<

<<A>> >>A<<

Front pillar trim removal steps

4. Front door opening trim
6. Front pillar trim
7. Front pillar trim clip <Except for MMNA product>

Centre pillar trim removal steps

1. Front scuff plate

- Rear seat cushion

3. Rear scuff plate

Attached sheet 4 (4/10)

Centre pillar trim removal steps

4. Front door opening trim
5. Rear door opening trim
8. Centre pillar cover inner
9. Centre pillar trim lower
10. <<B>> Centre pillar trim cap
11. Centre pillar cover upper
12. Centre pillar trim upper

Rear shelf trim removal step

13. Rear shelf trim

Cargo floor box removal steps

14. Cargo floor lid
15. Cargo floor pad <Vehicles with cargo floor pad>
16. Cargo floor board front
17. Cargo floor box
18. Cargo floor box (LH/RH)

Rear end trim removal steps

14. Cargo floor lid
16. Cargo floor board front
17. Cargo floor box
19. Rear end trim

Quarter trim removal steps

- Rear seat cushion
- Rear seat back assembly

3. Rear scuff plate

Quarter trim removal steps

5. Rear door opening trim
13. Rear shelf trim
14. Cargo floor lid
15. Cargo floor pad <Vehicles with cargo floor pad>
16. Cargo floor board front
17. Cargo floor box
18. Cargo floor box (LH/RH)
19. Rear end trim
20. Parcel strap hook
21. Quarter trim lid
22. Luggage room lamp
23. Quarter trim lower
24. <<B>> Quarter upper trim cap
25. Quarter trim upper

NOTE: For the vehicles with curtain air bag, install the front pillar trim provided for curtain air bag.

CLIP AND CLAW POSITIONS

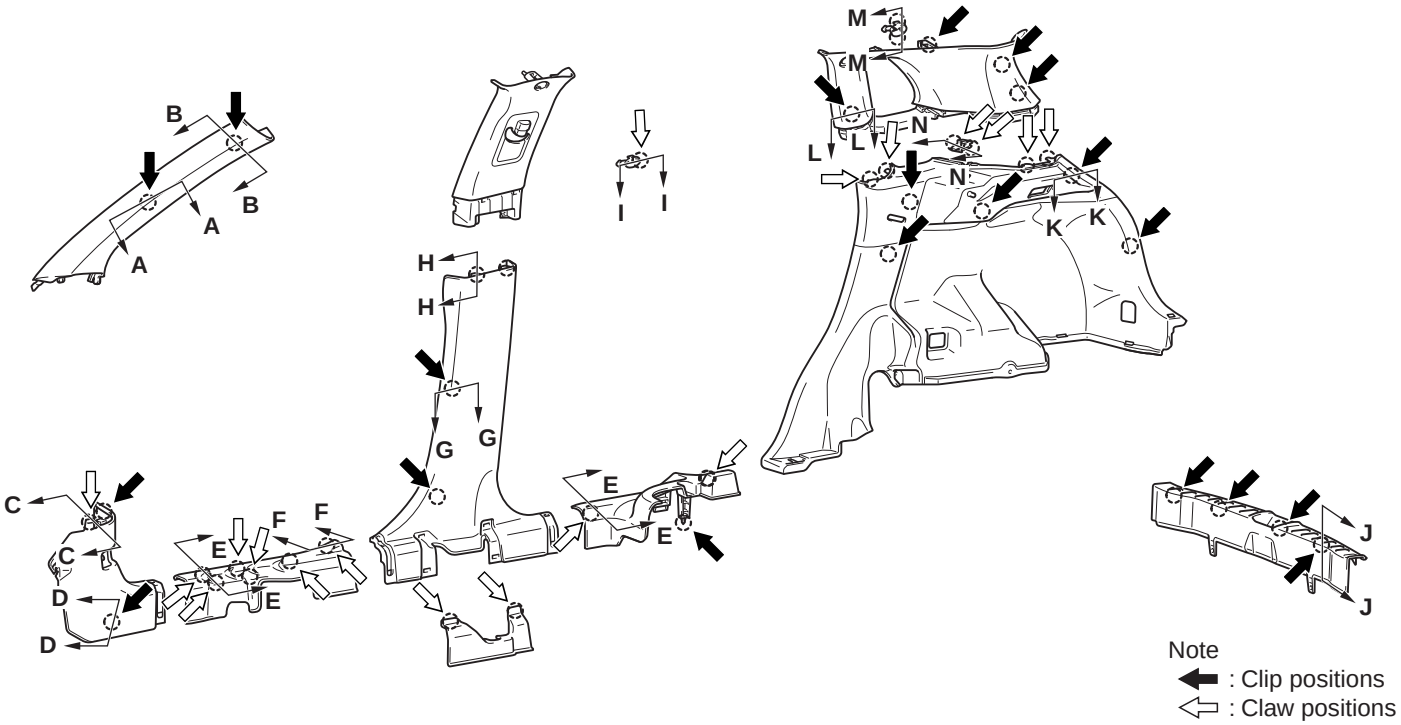

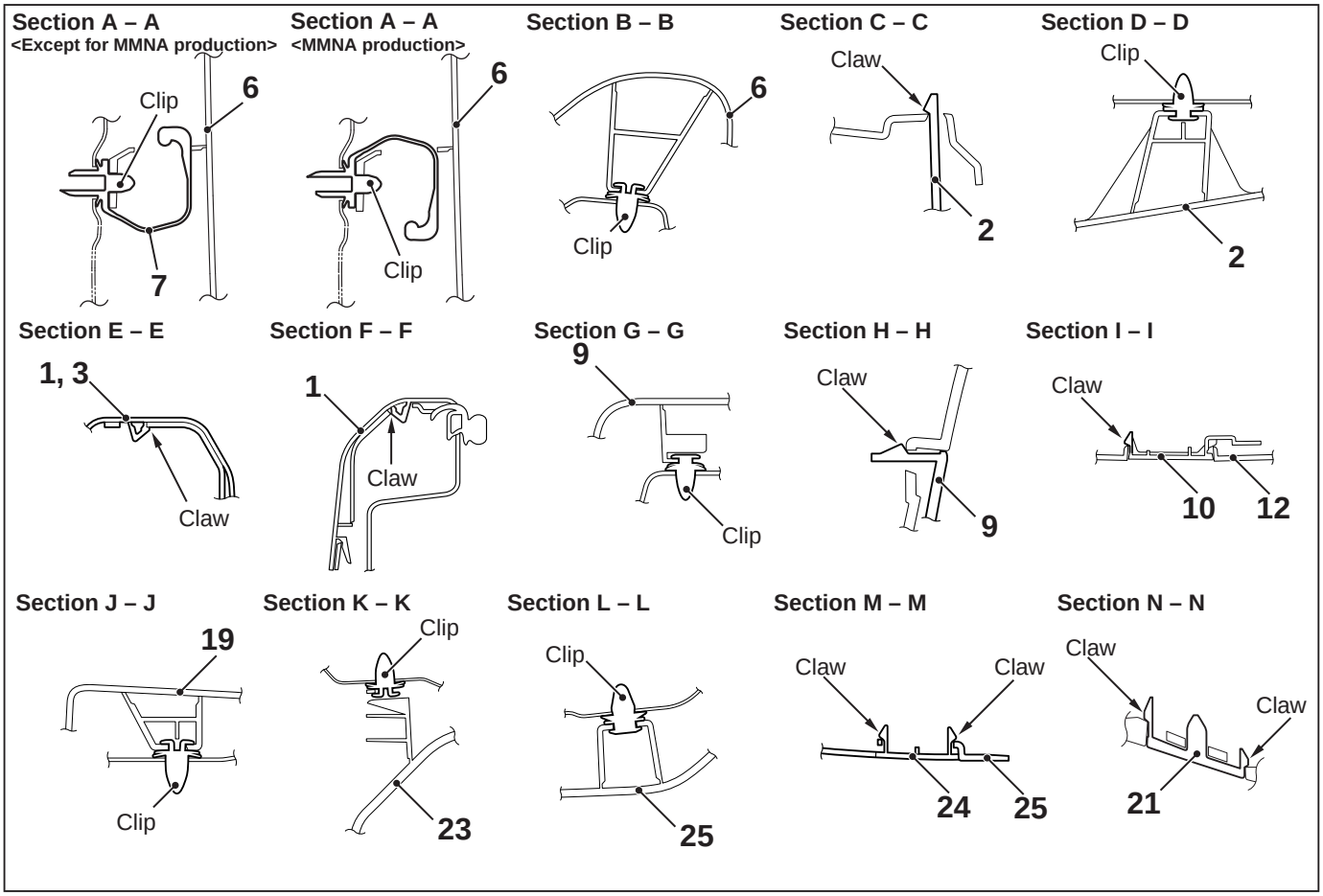

ACE01041AB

NOTE: Each number in the illustration indicates a part number.

Attached sheet 4 (6/10)

REMOVAL SERVICE POINTS

<<A>>FRONT PILLAR TRIM/FRONT PILLAR TRIM CLIP REMOVAL

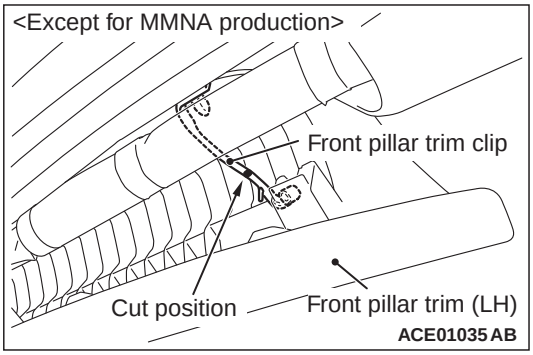

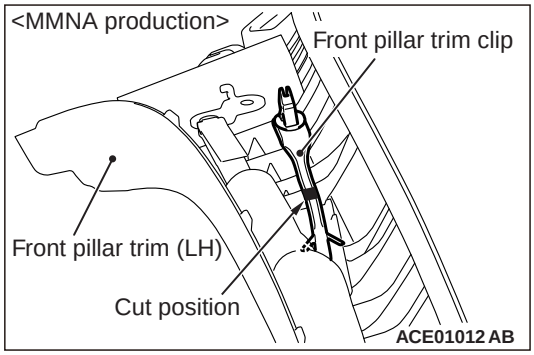

1. Pull down the front pillar trim as shown in the figure.
2. Cut the front pillar trim clip at the cutting position shown in the figure, taking care not to damage the other components.
3. Remove the front pillar trim clip remaining on the front pillar trim, taking care not to scratch the trim.
4. Remove the front pillar trim clip remaining on the vehicle side by breaking it to prevent damage to the flange of the clip mounting hole.

<<B>> CENTRE PILLAR TRIM CAP/QUARTER TRIM UPPER CAP REMOVAL

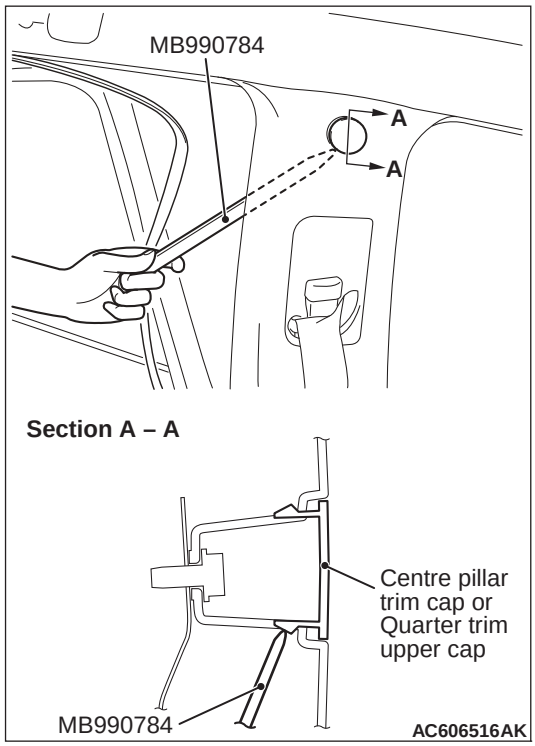

Remove the opening trim. Remove the trim cap by inserting the special tool ornament remover (MB990784) between the trim and body as shown in the illustration.

INSTALLATION SERVICE POINT

>>A<< FRONT PILLAR TRIM/FRONT PILLAR TRIM CLIP INSTALLATION

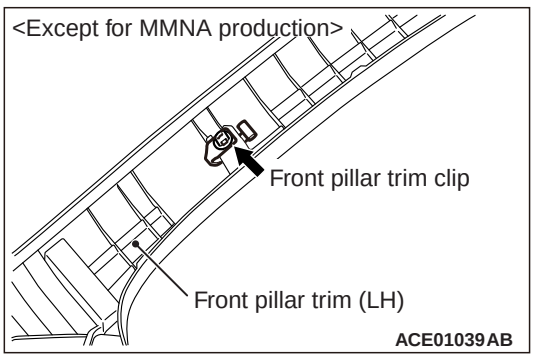

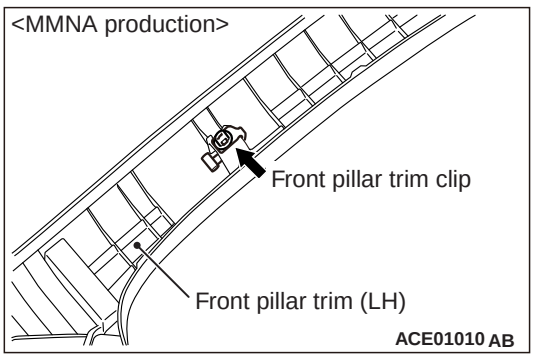

Make sure that the clip is installed in the correct direction.

Attached sheet 4 (7/10)

GENERAL INFORMATION

M1524000102747

OUTLINE OF CHANGE

- The service procedure has been changed as the steering wheel has been changed. The other service procedures are the same as before.

- The service procedure for the curtain air bag have been changed as the front pillar trim clip must be installed in the opposite direction on vehicles maufactured at MMNA.

<Added>

SERVICE PRECAUTION

M1524000302075

⚠ CAUTION
Never heat or incinerate the airbag modules and the seat belt pre-tensioners.

WARNING/CAUTION LABELS

M1524003002299

Driver's air bag module

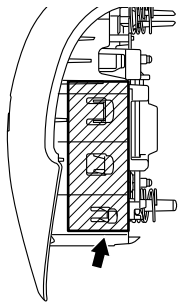

ACB03681AB

Attached sheet 4 (8/10)

- Clock spring connector terminal 1 and horn connector terminal 1
- Clock spring connector terminal 5 and horn connector terminal 5

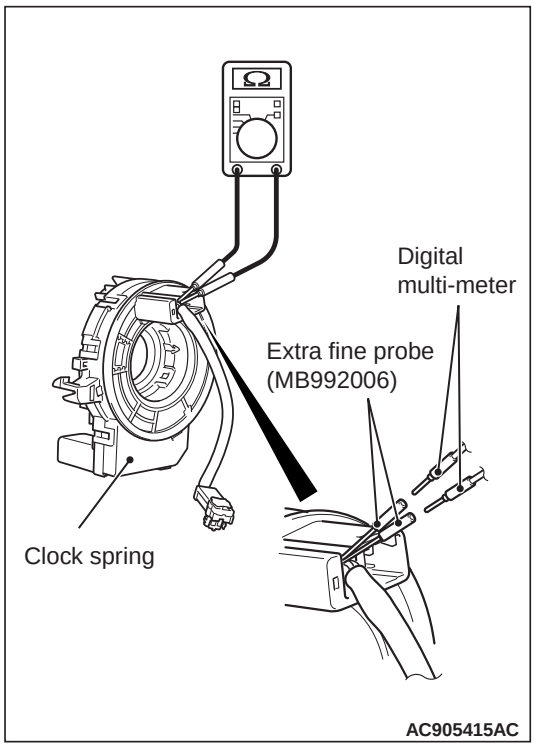

4. As shown in the Figure, connect the circuit tester to special tool extra fine probe (MB992006) and check to see that there is a charge between the terminals.

Insert the Attached sheet 4 (9/10) to (10/10).

<Added>

CURTAIN AIR BAG MODULE(S)

REMOVAL AND INSTALLATION

M1524013500794

⚠ CAUTION

- **Disconnect the negative (–) battery terminal and wait for 60 seconds or more before starting work. Insulate the disconnected (–) terminal by wrapping the tape (Refer to the item 5 of Service Precautions).**
- **Never attempt to disassemble or repair the air bag module. If faulty, replace it with new one(s).**
- **Handle the air bag module with sufficient caution, and do not drop the module or allow contact with water, oil, or others. If denting, cracking, or deformation is discovered, replace it with new one(s).**
- **Store the air bag module on a flat surface. Also, do not put anything on it.**
- **Do not store the air bag modules in a place more than 93°C.**
- **After the curtain air bag deployment, replace the curtain air bag module with a new part.**
- **Put on gloves and safety glasses when handling deployed air bags.**
- **When discarding the air bag module, make sure to deploy the air bag before the disposal.**
- **When the front pillar trim is installed after the air bag module has been installed, make sure that the its trim clip faces towards the right direction. (Refer to GROUP 52A - Interior trim)**

Pre-removal operation
- Turn the ignition switch to the LOCK (OFF) position.
- Disconnect the negative (–) battery terminal.

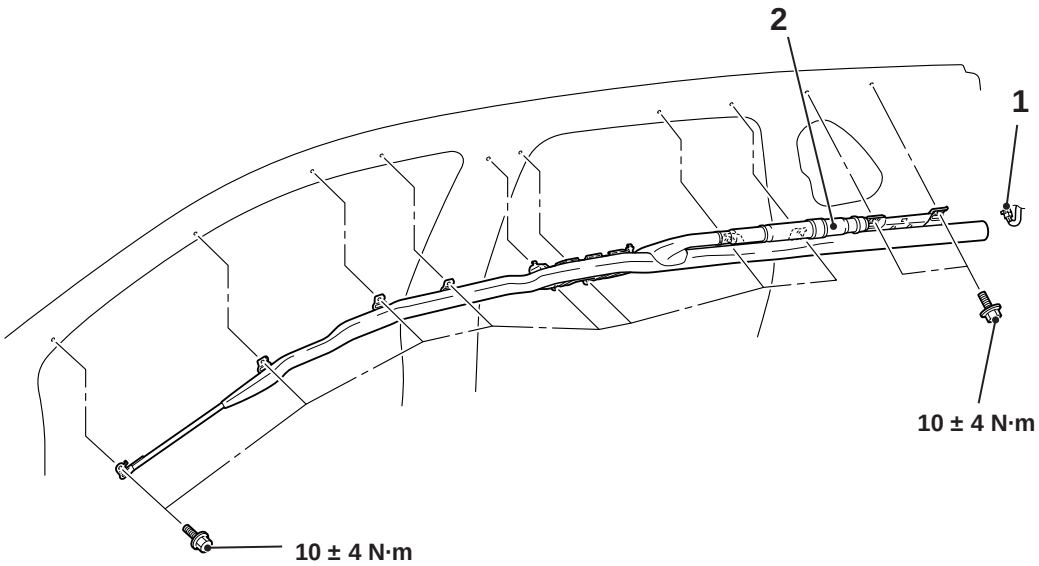

AC904712 AC

Removal steps
- Headlining (Refer to GROUP 52A – Headlining).

<<A>> 1. Curtain air bag module connector
<<B>> 2. Curtain air bag module

Installation steps

>>A<< • Pre-installation inspection
>>B<< 2. Curtain air bag module

Installation steps (Continued)

>>C<< 1. Curtain air bag module connector
- Headlining (Refer to GROUP 52A – Headlining).

>>D<< • Post-installation inspection

NOTE: The figure shows the right curtain air bag module.

REMOVAL SERVICE POINTS

<<A>> CURTAIN AIR BAG MODULE CONNECTOR REMOVAL

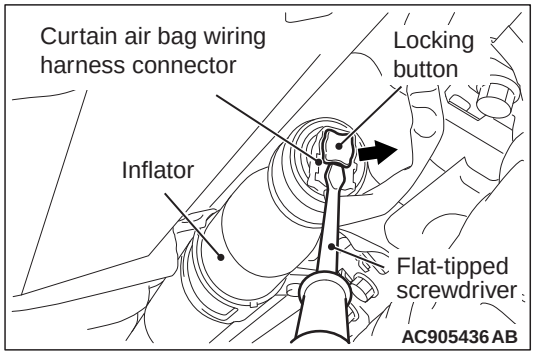

Use the flat-tipped screwdriver to pull out the locking button of wiring harness side connector, and release the lock.

<<B>> CURTAIN AIR BAG MODULE REMOVAL

⚠ CAUTION

- **Never use an electric tester to diagnose the air bag module circuit. Never attempt to disassemble the air bag module.**
- **The removed air bag module should be stored in a clean, dry place.**
- **When discarding the air bag module, discard after deploying the air bag as specified in the service procedure.**

INSTALLATION SERVICE POINTS

>>A<< PRE-INSTALLATION INSPECTION

1. Before the installation, check the air bag module.

   NOTE: Even when installing a new air bag module, perform an inspection before the installation.

2. Connect the negative (–) battery terminal.

⚠ CAUTION

Be sure to turn the ignition key to the LOCK (OFF) position when connecting or disconnecting M.U.T.-III.

3. Connect M.U.T.-III to the diagnosis connector (16 pin).
4. Turn the ignition switch to the ON position.
5. Read the diagnosis code, and check that everything is normal except the air bag module open circuit.
6. Turn the ignition switch to the LOCK (OFF) position.

>>B<< CURTAIN AIR BAG MODULE INSTALLATION

⚠ CAUTION

- **Take care not to contort the curtain air bag when installing it.**
- **Do not trap the air bag with the peripheral parts.**
- **Do not trap the strap with the front pillar trim clip or others.**

>>C<< CURTAIN AIR BAG MODULE CONNECTOR INSTALLATION

⚠ CAUTION

Connect the connector to the inflator thoroughly.

>>D<< POST-INSTALLATION INSPECTION

1. Turn the ignition switch to the "ON" position.

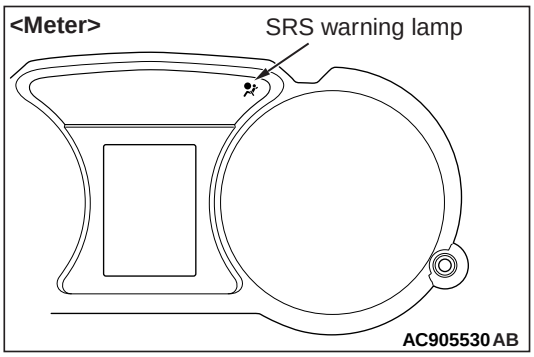

2. Check that the SRS warning lamp is illuminated for 6 to 8 seconds, and extinguished afterward.
3. If the lamp does not extinguish, perform the troubleshooting.

TRIMS

INTERIOR TRIM

REMOVAL AND INSTALLATION

M1521001102031

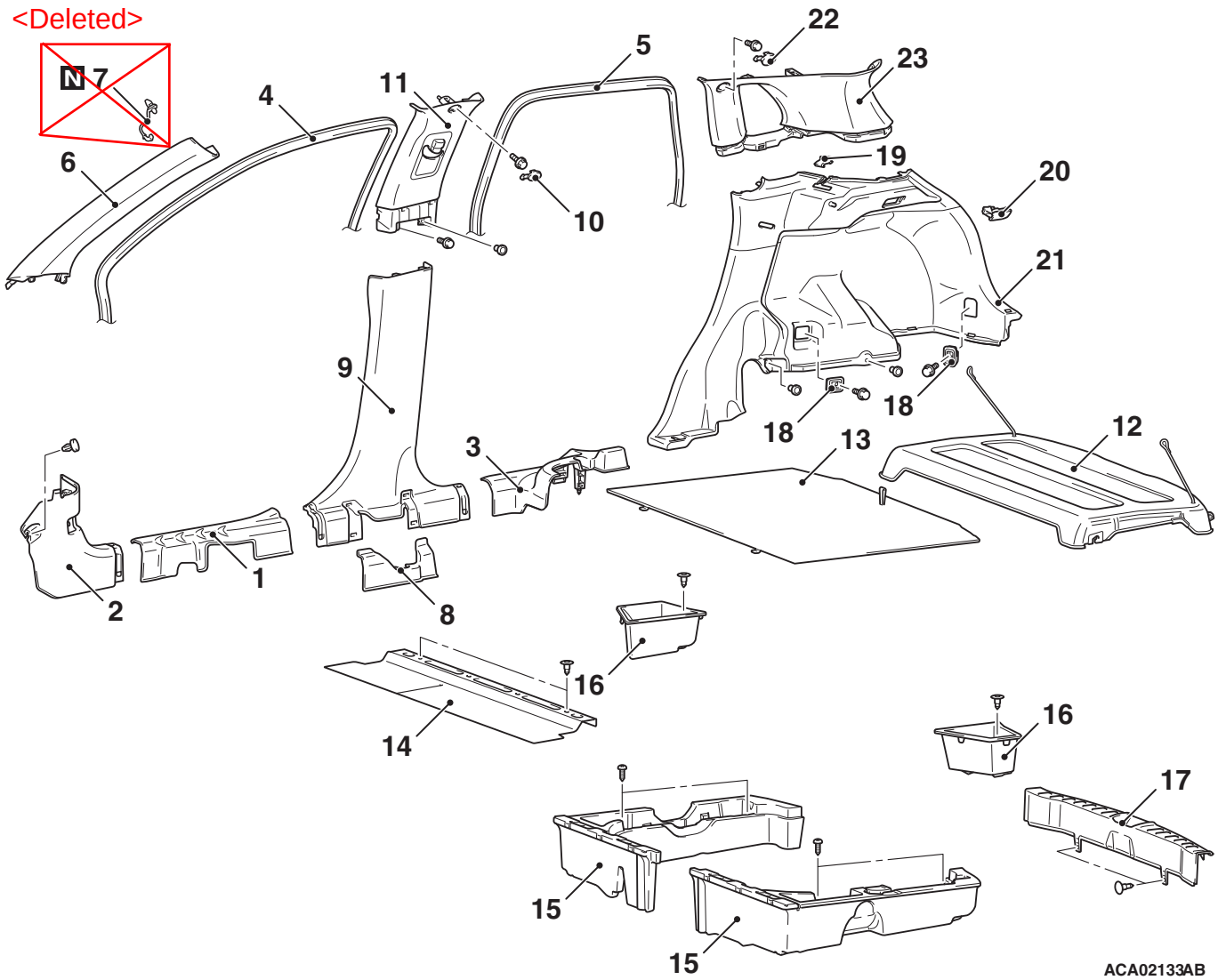

Cowl side trim removal steps
1. Front scuff plate
2. Cowl side trim

Rear scuff plate removal step
- Rear seat cushion

3. Rear scuff plate

Front pillar trim removal steps
4. Front door opening trim
6. Front pillar trim

<Added>
<<A>> >>A<<
<<A>>
7. Front pillar trim clip
<Deleted>

Center pillar trim removal steps
1. Front scuff plate

- Rear seat cushion

3. Rear scuff plate

<<B>>

Center pillar trim removal steps
4. Front door opening trim
5. Rear door opening trim
8. Center pillar cover inner
9. Center pillar trim lower
10. Center pillar trim cap
11. Center pillar trim upper

Rear shelf trim removal step
12. Rear shelf trim <Vehicles with rear shelf trim>

Cargo floor box removal steps
13. Cargo floor lid
14. Cargo floor board front
15. Cargo floor box
16. Cargo floor box (LH/RH)

Attached sheet 5 (2/4)

CLIP AND CLAW POSITIONS

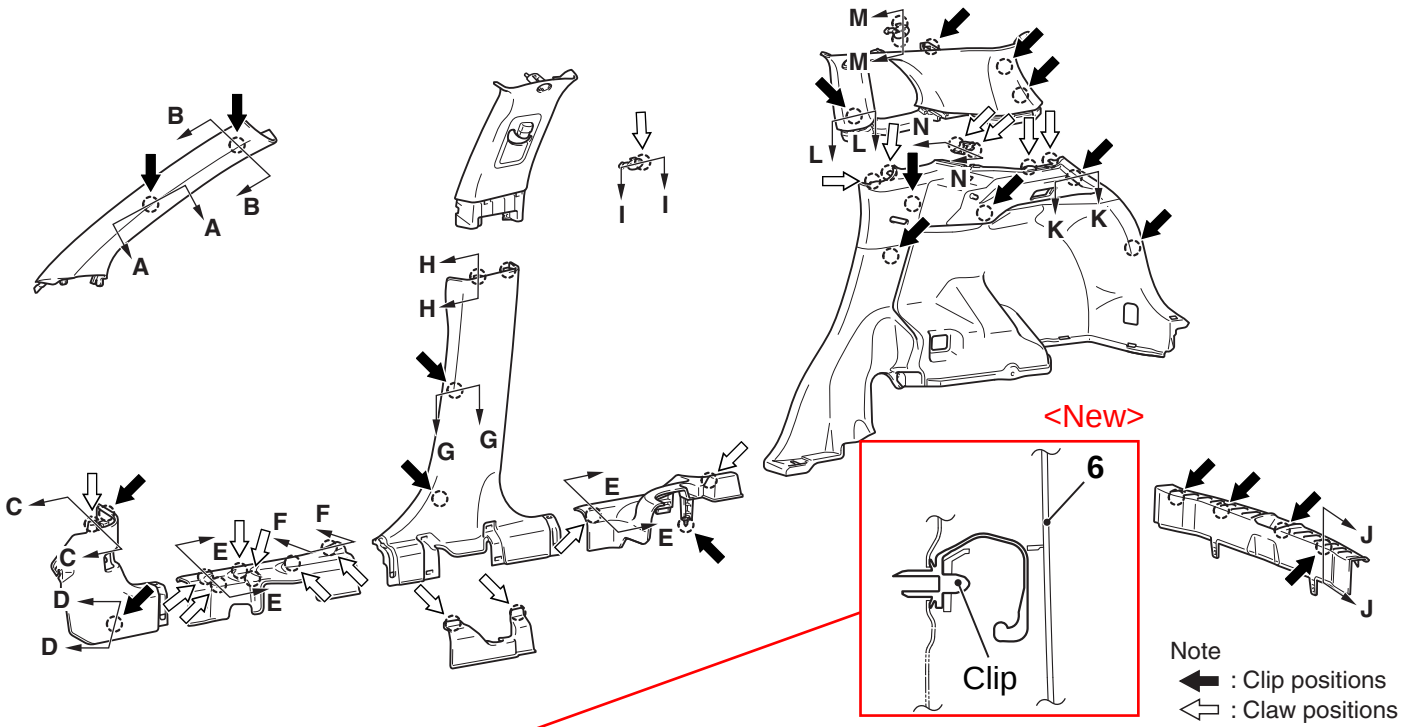

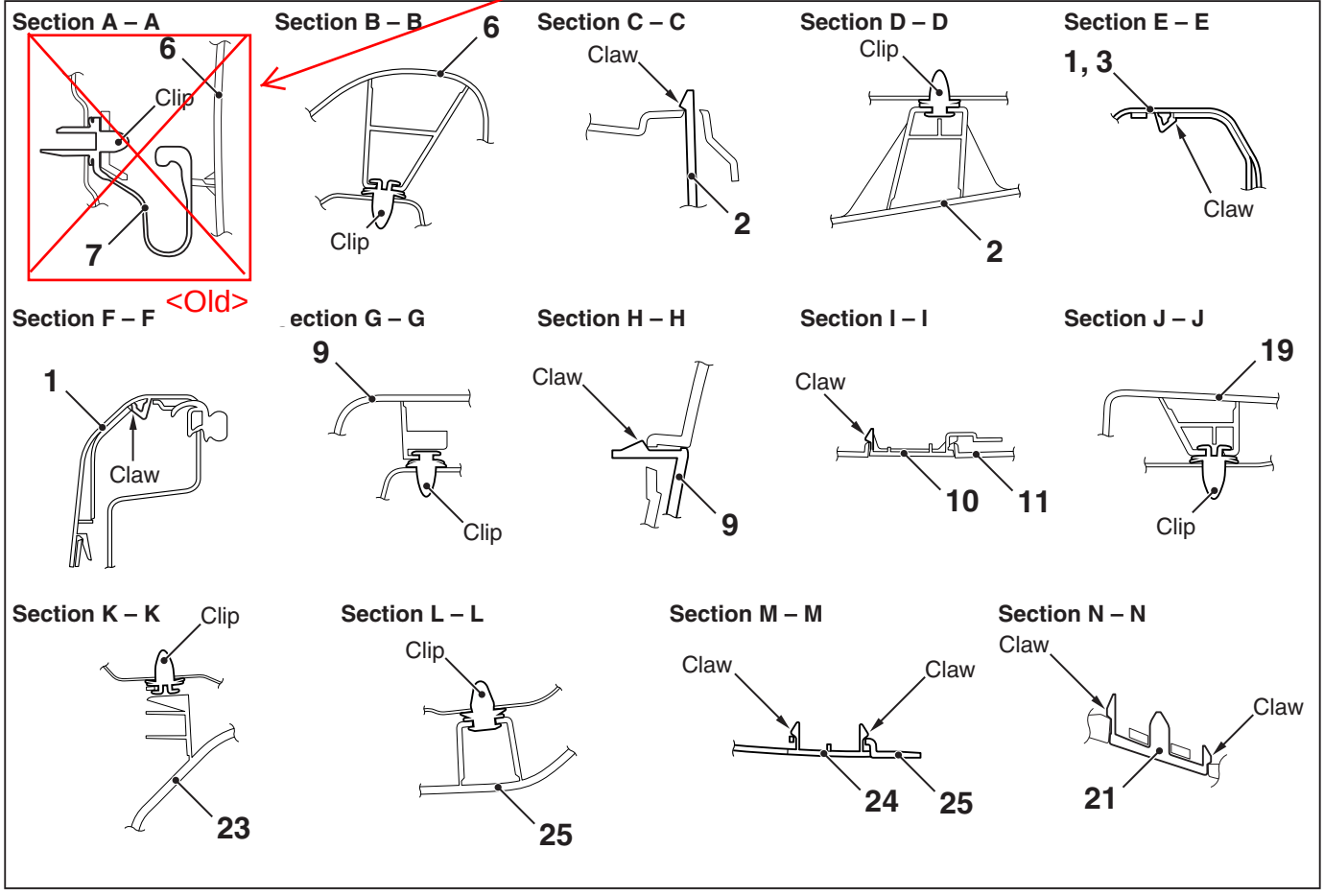

AC904458AB

NOTE: Each number in the illustration indicates a part number.

TSB Revision

REMOVAL SERVICE POINTS

<Old>

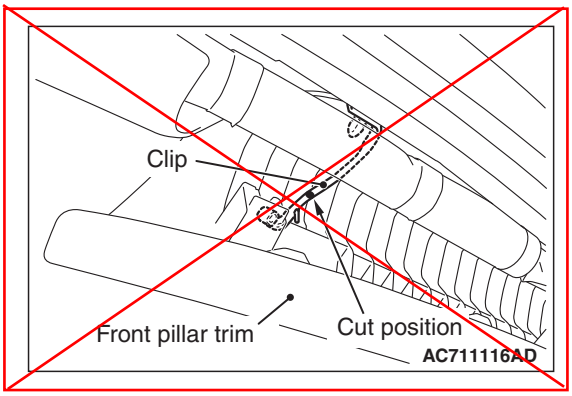

<<A>>FRONT PILLAR TRIM REMOVAL

1. Pull down the front or rear pillar trim as shown in the figure.
2. Cut the clip at the cutting position shown in the figure, taking care not to damage the other components.
3. Remove the clip remaining on the front or rear pillar trim, taking care not to scratch the trim.
4. Remove the clip remaining on the vehicle side by breaking it to prevent damage to the flange of the clip mounting hole.

<<B>> CENTER PILLAR TRIM CAP/QUARTER TRIM UPPER CAP REMOVAL

Remove the opening trim. Remove the trim cap by inserting the special tool ornament remover (MB990784) between the trim and body as shown in the illustration.

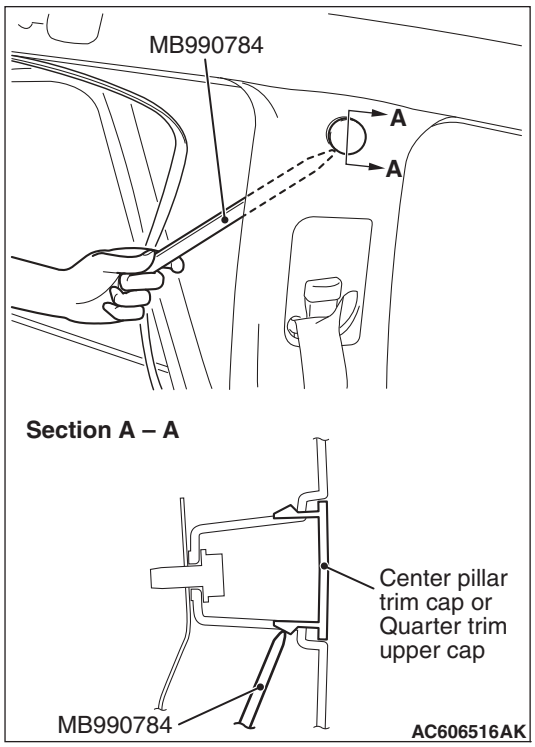

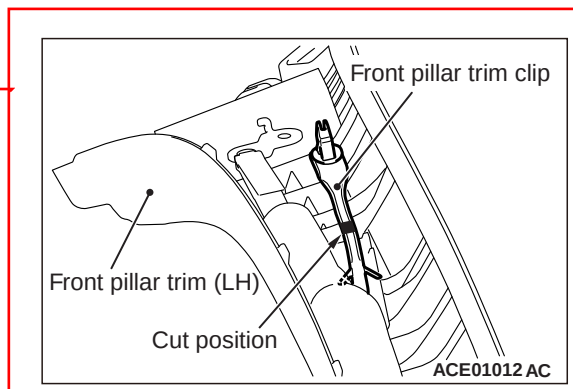

<New>

INSTALLATION SERVICE POINT

>>A<< FRONT PILLAR TRIM INSTALLAION

Make sure that the clip is installed in the correct direction.

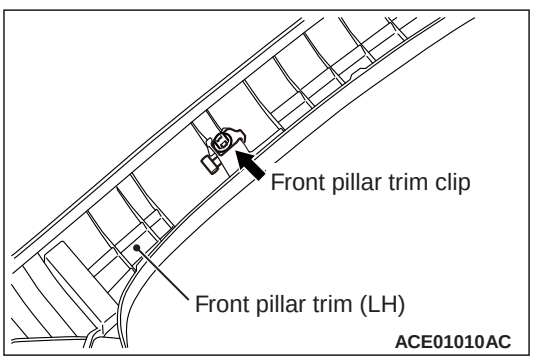

<Added>

Attached sheet 5 (4/4)

CURTAIN AIR BAG MODULE(S)

REMOVAL AND INSTALLATION

M1524013500716

⚠ WARNING

- ***Never attempt to disassemble or repair the curtain air bag modules. If faulty, replace it.***
- ***Do not drop the curtain air bag modules or allow contact with water, grease or oil. Replace it if a dent, crack, deformation or rust is detected.***
- ***Do not expose the curtain air bag modules to temperatures over 93 ℃ (200 ℉).***
- ***Wear gloves and safety glasses when handling air bags that have already deployed.***
- ***Certain components of this vehicle, such as air bag modules and seat belt pre-tensioners, may contain perchlorate materials. Before deployment and/or disposal of these components, review and comply with all applicable Federal, state and local regulations.***
- ***An undeployed curtain air bag module should only be disposed of in accordance with the procedures.***
- ***When removing and installing the front passenger seat, be sure to carry out accuracy check occupant classification sensor after the seat has been installed in the vehicle. (On-vehicle Service.)***

Pre-removal Operation
- Turn the ignition switch to the "LOCK" (OFF) position.

<Added>

・When the front pillar trim is installed after the air bag module has been installed, make sure that the its trim clip faces towards the right direction. (Refer to GROUP 52A - Interior trim)

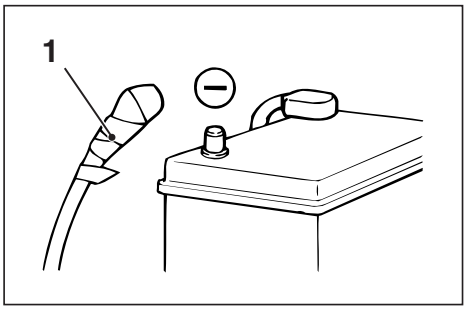

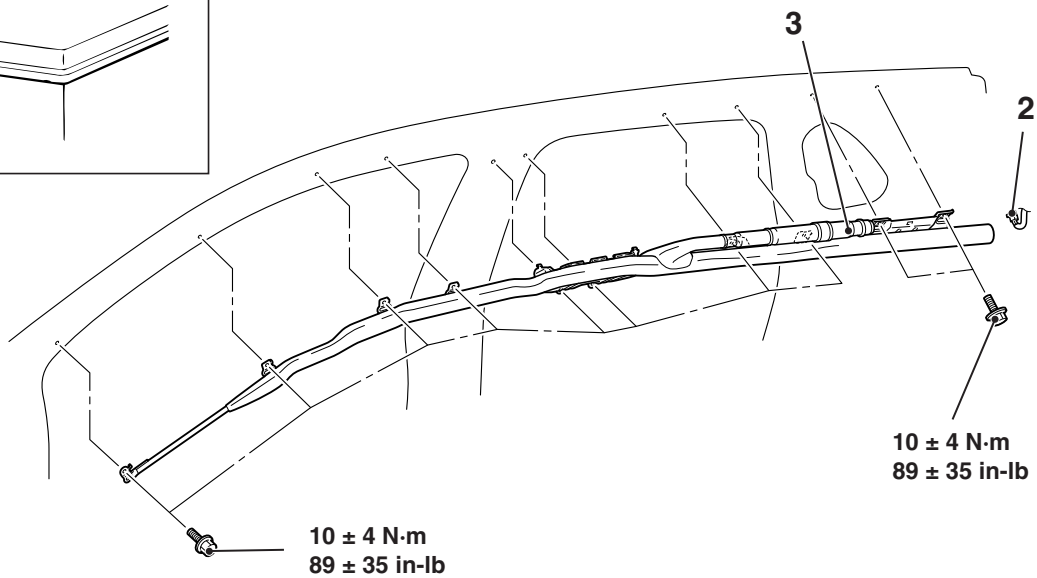

ACA03439AB

Removal steps

<<A>> 1. Negative (–) battery cable connection
- Headlining (Refer to GROUP 52A, Headlining).

<<B>> 2. Curtain air bag module connector connection

<<C>> 3. Curtain air bag module

Installation steps

>>A<< • Pre-installation inspection

>>B<< 3. Curtain air bag module

>>C<< 2. Curtain air bag module connector connection
- Headlining (Refer to GROUP 52A, Headlining).

1. Negative (–) battery cable connection

>>D<< • Post-installation inspection

TSB Revision