# SERVICE BULLETIN

MITSUBISHI MOTORS

GLOBAL AFTER SALES OFFICE, MITSUBISHI MOTORS CORPORATION

| | | |
|---|---|---|
| PURPOSE : CHANGE | ISSUE NO. : MSB-14EXML00-002A | DATE : 2014-02-25 |
| SUBJECT : SPLASH SHIELD REMOVAL AND INSTALLATION & OVERFENDER REMOVAL AND INSTALLATION | | <DESTINATION/MODEL> (As per attached sheet 1) <M/Y> 13-14 |
| GROUP : GENERAL(Gr:00) | | OUTLANDER/OUTLANDER PHEV(GF0W) |

## 1. Description :

Please refer to the attached document for the information about the change of mention in the applicable service manual. (The grommet screw is used instead of the clip, and the splash shield mounting hole at the fender side is changed from the round hole(diameter:6mm) to the rectangle hole(8.5×8.5mm). Also, the moulding removal of both front and rear bumpers are amended.

## 2. Affected service manuals :

Please refer to the attached document (Attached sheet 1)

## 3. About the details :

Please refer to the attached document (Attached sheet 2 and 3(3/4-4/4))

## 4. Effective time :

**1)The grommet screw / The splash shield mounting hole**

~~**13MY : From the vehicle produced in the end of Oct, 2013.**~~

~~**14MY & 14.5MY : From the vehicle produced initially.**~~

**From the vehicles produced in the end of Oct 2013. (Revision A)**

**2) The moulding removal of both front and rear bumpers**

~~**From the vehicle produced initially**~~

**For EUR/RUSSIA/ARGENTINA/SOUTH AFRICA : From 14MY vehicles (Revision A)**

**For G.EXP/GCC/MMAL/NZ/CHINA : From 14.5MY vehicles (Revision A)**

**For MMNA : Out of target (Revision A)**

**※Original MSB(MSB-14EXML00-002)was issued on Jan 17, 2014.**

**※Revised A version was issued on Feb 25, 2014 this time.**

For overseas market Attached sheet 1

| Destination | Application manual | Pub No. | Applicable title (INFO ID) | Contents |
|---|---|---|---|---|
| MMNA | 2014 OUTLANDER Service manual CD-ROM | MSCD-007B-2014 | SPLASH SHIELD REMOVAL AND INSTALLATION (M421-00-970-63600-01) | Attached sheet 2 |
| EU/RUSSIA | 2013 OUTLANDER Workshop manual | CGFE13E1-CD (ENG)<br>CGFF13E1-CD (FRE)<br>CGFG13E1-CD (GER)<br>CGFS13E1-CD (SPA)<br>CGFI13E1-CD (ITA)<br>RUSSIA:N/A | SPLASH SHIELD REMOVAL AND INSTALLATION (M421-00-970-63600-01) | Attached sheet 2 |
| EU/RUSSIA | 2014 OUTLANDER PHEV Workshop manual | CGFE14E1-CD (ENG)<br>CGFF14E1-CD (FRE)<br>CGFG14E1-CD (GER)<br>CGFS14E1-CD (SPA)<br>CGFI14E1-CD (ITA)<br>RUSSIA:N/A | SPLASH SHIELD REMOVAL AND INSTALLATION (M421-00-970-63600-01) | Attached sheet 2 |
| EU/Russia/ ARGENTINA/ SOUTH AFRICA | 2014 OUTLANDER Workshop manual | EUR/ARGENTINA/SOUTH AFRICA<br>CGFE14E2-CD (ENG)<br>CGFF14E2-CD (FRE)<br>CGFG14E2-CD (GER)<br>CGFS14E2-CD (SPA)<br>CGFI14E2-CD (ITA)<br>RUSSIA:N/A | OVERFENDER REMOVAL AND INSTALLATION (M511-02-470-58700-01) | Attached sheet 3 |
| RUSSIA KD | 2013 OUTLANDER Workshop manual (6B3) | N/A | SPLASH SHIELD REMOVAL AND INSTALLATION (M421-00-970-63600-01) | Attached sheet 2 |
| MMAL/NZ/China | 2013 OUTLANDER Workshop manual | MMAL:AU900304<br>NZ/CHINA:DRAFT | SPLASH SHIELD REMOVAL AND INSTALLATION (M421-00-970-64700-01) | Attached sheet 2 |
| MMAL/NZ | 2014.5 OUTLANDER Workshop manual | MMAL:AU900424<br>NZ:DRAFT | OVERFENDER REMOVAL AND INSTALLATION (M511-02-470-61700-01) | Attached sheet 3 |
| G.EXP/GCC | 2014 OUTLANDER Workshop manual | PWRE1303R(ENG)<br>PWRS1304R(SPA) | SPLASH SHIELD REMOVAL AND INSTALLATION (M421-00-970-63600-01) | Attached sheet 2 |

Attached sheet 2

＜国内＞

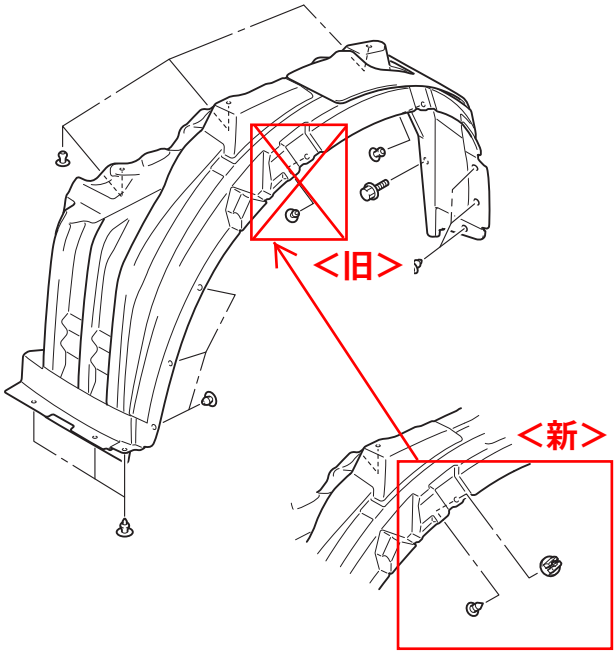


＜For overseas market＞

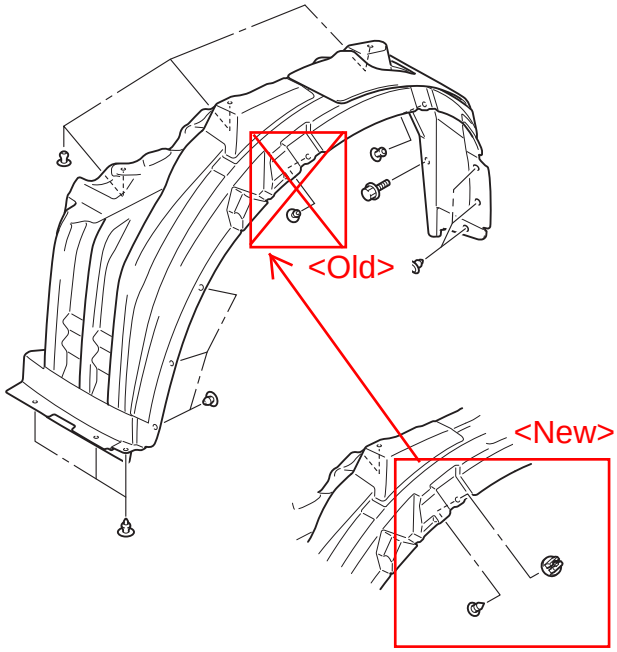


**＜国内＞**

**上図のようにクリップからグロメットスクリューへ変更すると共に，フェンダー側のスプラッシュシールド取付け穴を丸穴（Φ6）から四角穴（□8.5）に変更した。**

＜For overseas market＞

As shown above, a grommet screw is used instead of the clip, and the splash shield mounting hole at the fender side is a rectangle hole (8.5×8.5 mm) in place of the round hole (diameter: 6 mm).

Attached sheet 3 (3/4)

**Double-sided tape affixed location**

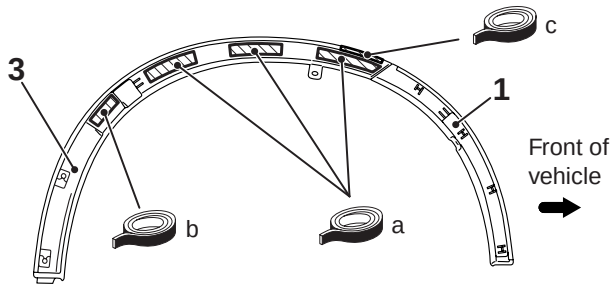


Front wheel arch moulding

ACD03327

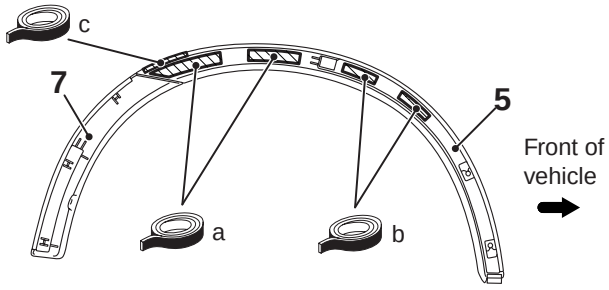


Rear wheel arch moulding

ACD03326

**Double-sided tape: Generic products,**
**a: 25.0 mm width and 2.5 mm thickness**
**b: 20.0 mm width and 1.6 mm thickness**
**c: 4.0 mm width and 1.0 mm thickness**
**Specified primer: 3M K-500**

ACD03509AB

**Removal steps**

- Side air dam (Refer to P.51-25.)

<<A>> 1. Front bumper moulding
2. Front bumper face pad
>>B<< 3. Front wheel arch moulding
4. Front overfender pad
>>A<< 5. Rear wheel arch moulding
6. Rear overfender pad
<<B>> 7. Rear bumper moulding
8. Rear bumper pad

## REMOVAL SERVICE POINT

### <<A>> FRONT BUMPER MOULDING REMOVAL

**⚠ CAUTION**

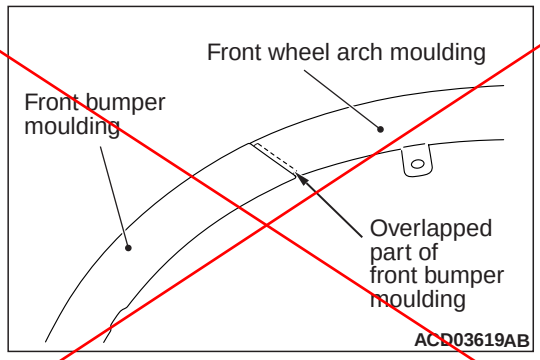


ACD03619AB

**Note that the front wheel arch moulding and the front bumper moulding overlap.**

<Old>

<New>

Insert A of the attached sheet 3(4/4).

### <<B>> REAR BUMPER MOULDING REMOVAL

**⚠ CAUTION**

<Old>

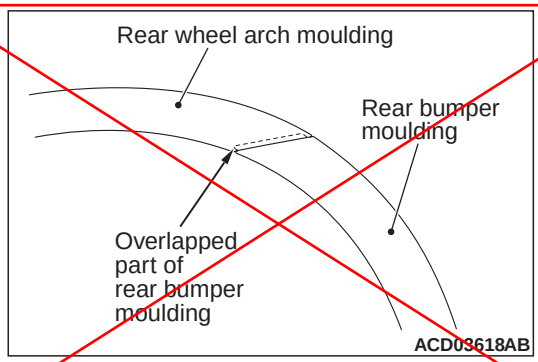


ACD03618AB

**Note that the rear wheel arch moulding and the rear bumper moulding overlap.**

## INSTALLATION SERVICE POINT

### >>A<< REAR WHEEL ARCH MOULDING INSTALLATION

Application position of double-sided adhesive tape

Insert B of the attached sheet 3(4/4).

<New>

A

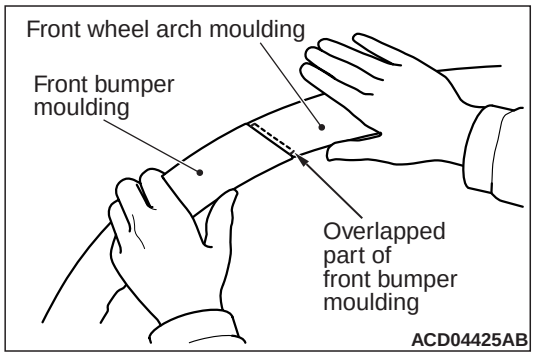


**As the front wheel arch moulding and the front bumper moulding overlap, hold the front wheel arch moulding with hand when removing the front bumper moulding to prevent deformation.**

B

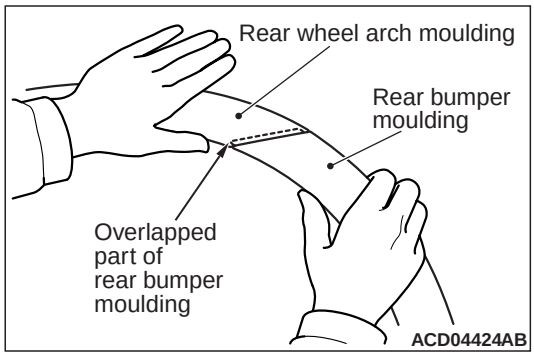


**As the rear wheel arch moulding and the rear bumper moulding overlap, hold the rear wheel arch moulding with hand when removing the rear bumper moulding to prevent deformation.**