SERVICE BULLETIN

MITSUBISHI MOTORS

GLOBAL AFTER SALES OFFICE, MITSUBISHI MOTORS CORPORATION

PURPOSE : CHANGE	ISSUE NO. : MSB-14EXML14-001A	DATE : 2014-03-18
SUBJECT : RADIATOR FAN & CONDENSER FAN		<Destination/Model> (AS SHOWN BELOW) <M/Y> ALL
GROUP : ENGINE COOLING(Gr.14)		

1. Description :

Please refer to the attached document for the information about the change of mention in the applicable service manual.
(The nuts for mounting the radiator fan and condenser fan are not reusable)

2. About the details :

Please refer to the attached document **(Attached sheet 2)**

3. Effective time : From the vehicle produced initially

4. The related models are as shown below :

(For the removal and installation of the radiators of all model years in the affected models)

- **G.EXP :**
  OUTLANDER(CW0W/GF0W)/DELICAD:5(CV0W)/ASX(GA0W)/LANCER EX/LANCER(CY0A)LANCER EVO(CZ4A)

- **MMAL :**
  OUTLANDER(CW0W/GF0W)/OUTLANDER PHEV(GF0W)/ASX(GA0W)/LANCER(CY0A)/ LANCER SPORTBACK(CX0A)/LANCER EVO(CZ4A)

- **NZ :**
  OUTLANDER(CW0W/GF0W)/OUTLANDER PHEV(GF0W)/ASX(GA0W)/LANCER(CY0A)/ LANCER SPORTBACK(CX0A)/LANCER EVO(CZ4A)

- **GCC :**
  OUTLANDER(CW0W/GF0W)/ASX(GA0W)/LANCER(CY0A)/LANCER EVO(CZ4A)

- **MMNA/USTP :** A
  OUTLANDER(CW0W/GF0W)/OUTLANDER SPORT/RVR/ASX(GA0W)/ LANCER(CY0A)/ LANCER SPORTBACK(CX0A)/LANCER EVO(CZ4A)

- **EUR/RUSSIA :** A
  OUTLANDER(CW0W/GF0W)/ASX(GA0W)/LANCER(CY0A)/LANCER SPORTBACK(CX0A) LANCER EVO(CZ4A)/4007(PEUGEOT :CG7W)/C-CROSSER(CH7W)/4008(PEUGEOT: GB0W)/C4 AIRCROSS(GC0W)

Revision history

		MSB No.	Issued Date
Original		MSB-13XL14-001	2013/7/25
Revision	A	MSB-14EXML14-001A	2014/3/18

Attached sheet 2

<OUTLANDER (Up to May, 2013), DELICA D:5, ASX/OUTLANDER SPORT/RVR
LANCER/LANCER EX, LANCER SPORTBACK, LANCER EVOLUTION>

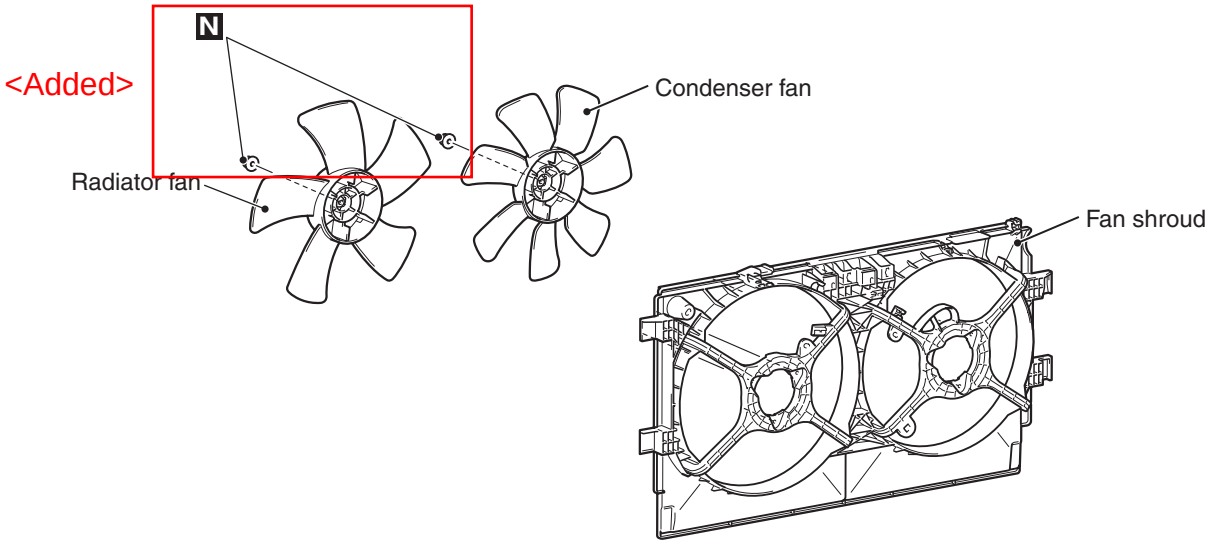

<OUTLANDER (From June, 2013)/OUTLANDER PHEV >

