SERVICE BULLETIN

MITSUBISHI MOTORS

GLOBAL AFTER SALES OFFICE, MITSUBISHI MOTORS CORPORATION

PURPOSE : CHANGE	ISSUE NO. : MSB-14EXML33_42-001	DATE : 2014-09-03
SUBJECT : ADDITION OF THE FRONT SUSPENTION STRUT STIFFENER PLATE AND OMISSION OF CAUTION STATEMENT		<DESTINATION/MODEL> (As per attached sheet 1) <M/Y> 13-15
GROUP : Gr:33(FRONT SUSPENTION) / Gr:42(BODY)		OUTLANDER(GF0W)/ OUTLANDER PHEV(GG0W)

1. Description :

Please refer to the attached document for the information about the change of mention in the applicable service manual.

- The addition of the front suspention stiffener plate for steering stability
- The omission of caution statement regarding the mounting bolt for the strut assembly (Only for EUR/RUSSIA/G.EXP/GCC/MMAL/NZ/CHINA : Except for MMNA/MEXICO)

2. Affected service manuals :

Please refer to the attached document (Attached sheet 1)

3. About the details :

Please refer to the attached document (Attached sheets 4-9)

4. Effective time :

From the vehicles produced from the end of May 2013 : Addition of the front suspention Strut stiffener plate

For oversea market

<EU/RUSSIA>

Applicable manual	Pub. No.	Applicable title (INFO ID)	Contents
2013 OUTLANDER Workshop manual	CGFE13E1-CD (ENG) CGFF13E1-CD (FRE) CGFG13E1-CD (GER) CGFS13E1-CD (SPA) CGFI13E1-CD (ITA) RUSSIA: N/A	Strut assembly removal and installation (M332-00-111-64100-01)	Attached sheet 4
		Loose panel removal and installation (M421-00-311-41300-01)	Attached sheet 5
2014 OUTLANDER /OUTLANDER PHEV Workshop manual	CGFE14E2-CD (ENG) CGFF14E2-CD (FRE) CGFG14E2-CD (GER) CGFS14E2-CD (SPA) CGFI14E2-CD (ITA) RUSSIA: N/A	Strut assembly removal and installation (M332-00-111-64101-01)	Attached sheet 4
		Loose panel removal and installation (M421-00-311-41301-01)	Attached sheet 5
2014.5 OUTLANDER /OUTLANDER PHEV Workshop manual	CGFE14E3-CD (ENG) CGFF14E3-CD (FRE) CGFG14E3-CD (GER) CGFS14E3-CD (SPA) CGFI14E3-CD (ITA) RUSSIA: N/A	Strut assembly removal and installation (M332-00-111-72600-01)	Attached sheet 4
		Loose panel removal and installation (M421-00-311-41301-01)	Attached sheet 5

<G.EXP/GCC>

Applicable manual	Pub. No.	Applicable title (INFO ID)	Contents
2014 OUTLANDER Workshop manual	PWRE1303R (ENG) PWRS1304R (SPA)	Strut assembly removal and installation (M332-00-111-64100-01)	Attached sheet 4
		Loose panel removal and installation (M421-00-311-49100-01)	Attached sheet 6

<MMAL/NZ>

Applicable manual	Pub. No.	Applicable title (INFO ID)	Contents
2013 OUTLANDER Workshop manual	AU900304 NZ: DRAFT	Strut assembly removal and installation (M332-00-111-64100-01)	Attached sheet 4
		Loose panel removal and installation (M421-00-311-44600-01)	Attached sheet 7

<CHINA>

Applicable manual	Pub. No.	Applicable title (INFO ID)	Contents
2013 OUTLANDER Workshop manual	DRAFT	Strut assembly removal and installation (M332-00-111-64100-01)	Attached sheet 4
		Loose panel removal and installation (M421-00-311-44600-01)	Attached sheet 7

<MMNA/MEXICO>

Applicable manual	Pub. No.	Applicable title (INFO ID)	Contents
2014 OUTLANDER Service manual	MSCD-007B-2014 MEXICO: DRAFT	Strut assembly removal and installation (M332-00-111-64101-01)	Attached sheet 8
		Loose panel removal and installation (M421-00-311-56500-01)	Attached sheet 9
2015 OUTLANDER Service manual	MSCD-007B-2015 MEXICO: DRAFT	Strut assembly removal and installation (M332-00-111-64101-01)	Attached sheet 8
		Loose panel removal and installation (M421-00-311-56500-01)	Attached sheet 9

STRUT ASSEMBLY

REMOVAL AND INSTALLATION

<Correct>

M1332001101641

⚠ CAUTION

- **The parts indicated by *1 indicates parts which should be temporarily tightened, and then fully tightened with the vehicle standing on the ground at kerb weight.**
- **The parts indicated by *2 are the nuts with friction coefficient stabilizer. Prior to reinstallation, ensure there is no damage, clean dust and soiling from the bearing and thread surfaces, and tighten them to the specified torque.**

<Incorrect>

⚠ CAUTION

- **The part indicated by * is the nut with friction coefficient stabilizer. In removal, ensure there is no damage, clean dust and soiling from the bearing and thread surfaces, and tighten it to the specified torque.**

Pre-removal Operation	Post-installation Operation
• Front Height Sensor Removal (Refer to GROUP 54A – Height Sensor). <Vehicles with headlamp automatic levelling system>	• Front Height Sensor Installation (Refer to GROUP 54A – Height Sensor). <Vehicles with headlamp automatic levelling system> • Front Wheel Alignment Check and Adjustment.

<Old>

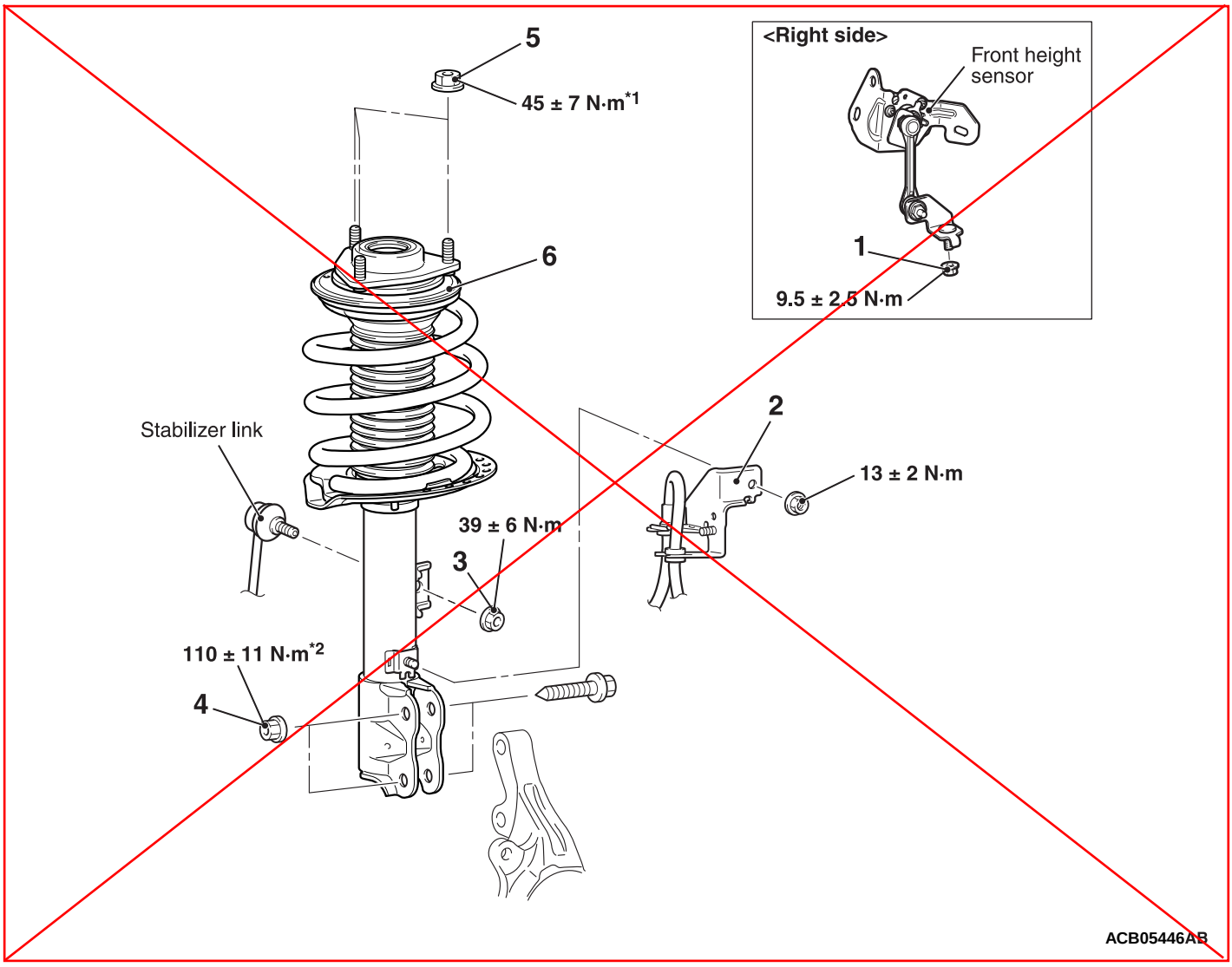

<New>

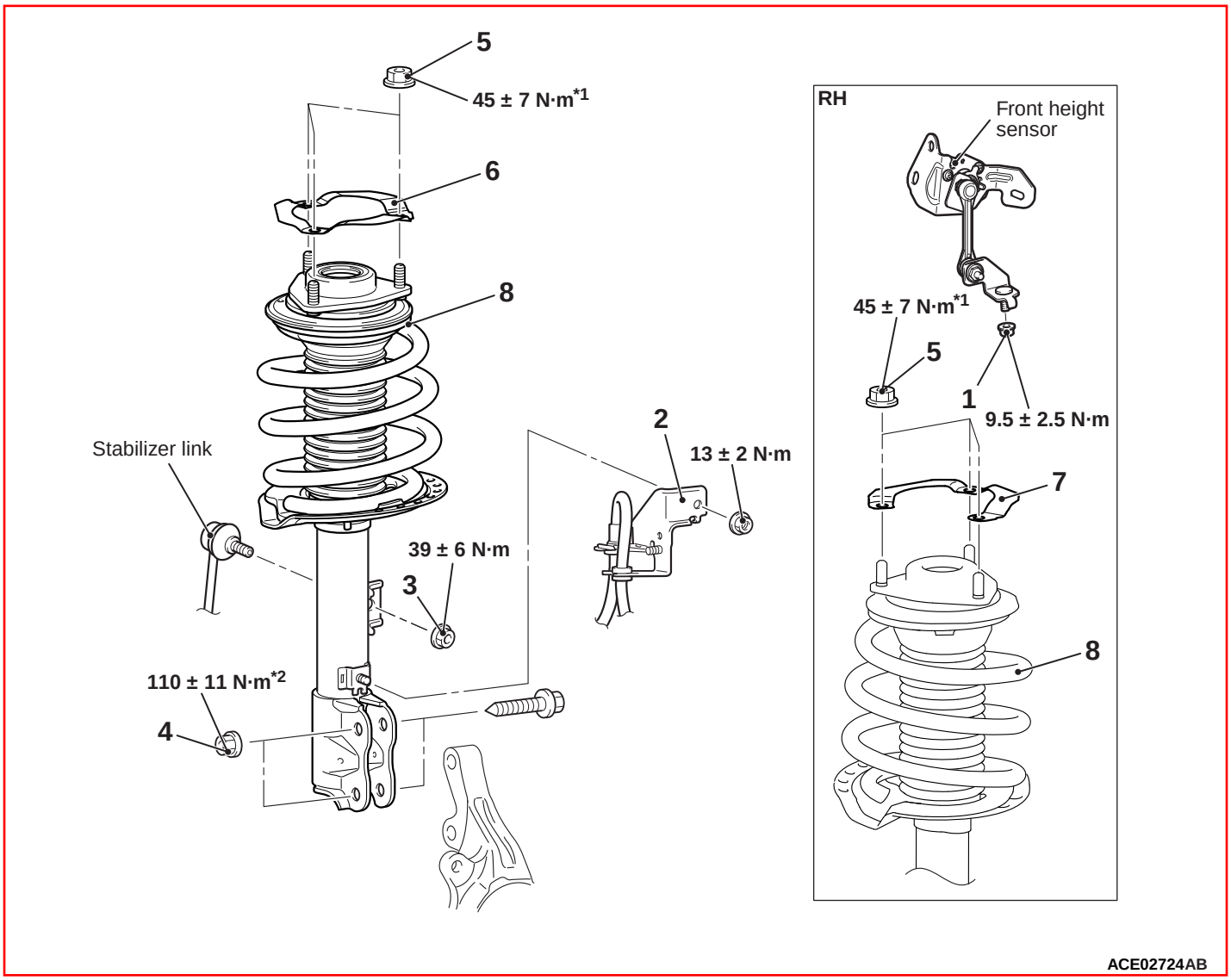

Removal steps

1. Front height sensor and lower arm connecting nut <Vehicles with headlamp automatic levelling system>
2. Brake hose bracket
3. <<**A**>> >>**A**<< Stabilizer link and strut connection nut
4. Knuckle and strut connection
5. Strut mounting nut
6. >>**B**<< Front suspension strut stiffener plate (LH)
7. >>**B**<< Front suspension strut stiffener plate (RH)
8. Strut assembly <Added>

REMOVAL SERVICE POINT
<<A>> STABILIZER LINK AND STRUT CONNECTION NUT REMOVAL

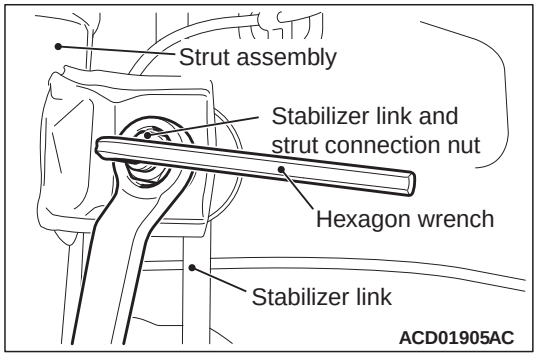

Use a hexagon wrench to counterhold the stabilizer link as shown. Then use a wrench to remove the nut securing the stabilizer link to the strut.

<Added>

INSTALLATION SERVICE POINT
>>A<< STABILIZER LINK AND STRUT CONNECTION NUT INSTALLATION

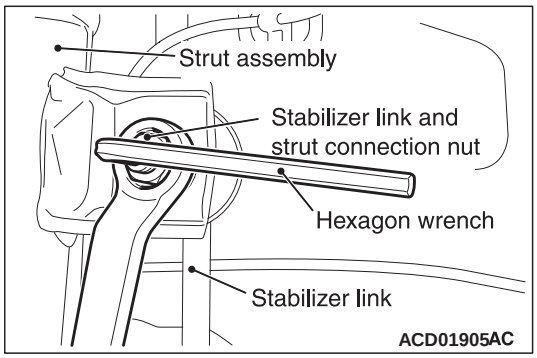

Use a hexagon wrench to counterhold the stabilizer link as shown. Then use a wrench to install the nut securing the stabilizer link to the strut.

>>B<< FRONT SUSPENSION STRUT STIFFENER PLATE (LH, RH) INSTALLATION

⚠ CAUTION

The front suspension strut stiffener plate (LH, RH) must be installed in a particular direction. Be sure to install them as shown.

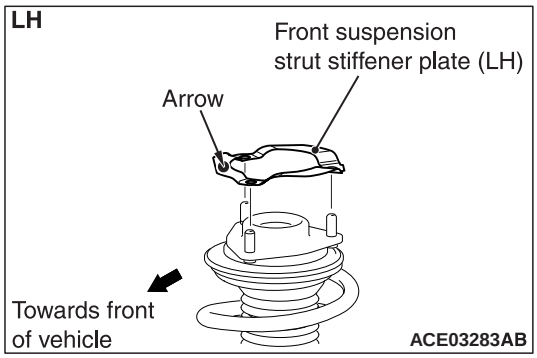

1. Install the front suspension strut stiffener plate (LH) so that the arrow faces towards the front of the vehicle.

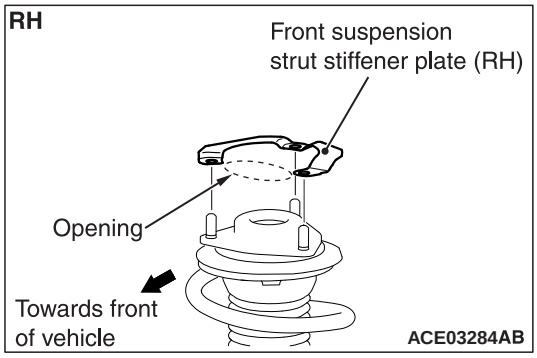

2. Install the front suspension strut stiffener plate (RH) so that the opening faces towards the front of the vehicle.

LOOSE PANEL

REMOVAL AND INSTALLATION

M1421003101413

⚠ CAUTION

- **Disconnect the battery (–) terminal and wait for 60 seconds or more before starting work. Insulate the disconnected (–) terminal by wrapping a tape.**
- **Handle the front impact sensor with sufficient caution, and do not drop the sensor or allow contact with water, oil, or others. If a dent, crack, deformation and others are discovered, replace it with a new one.** <Added>

- **The parts indicated by * indicates parts which should be temporarily tightened, and then fully tightened with the vehicle standing on the ground at kerb weight.**

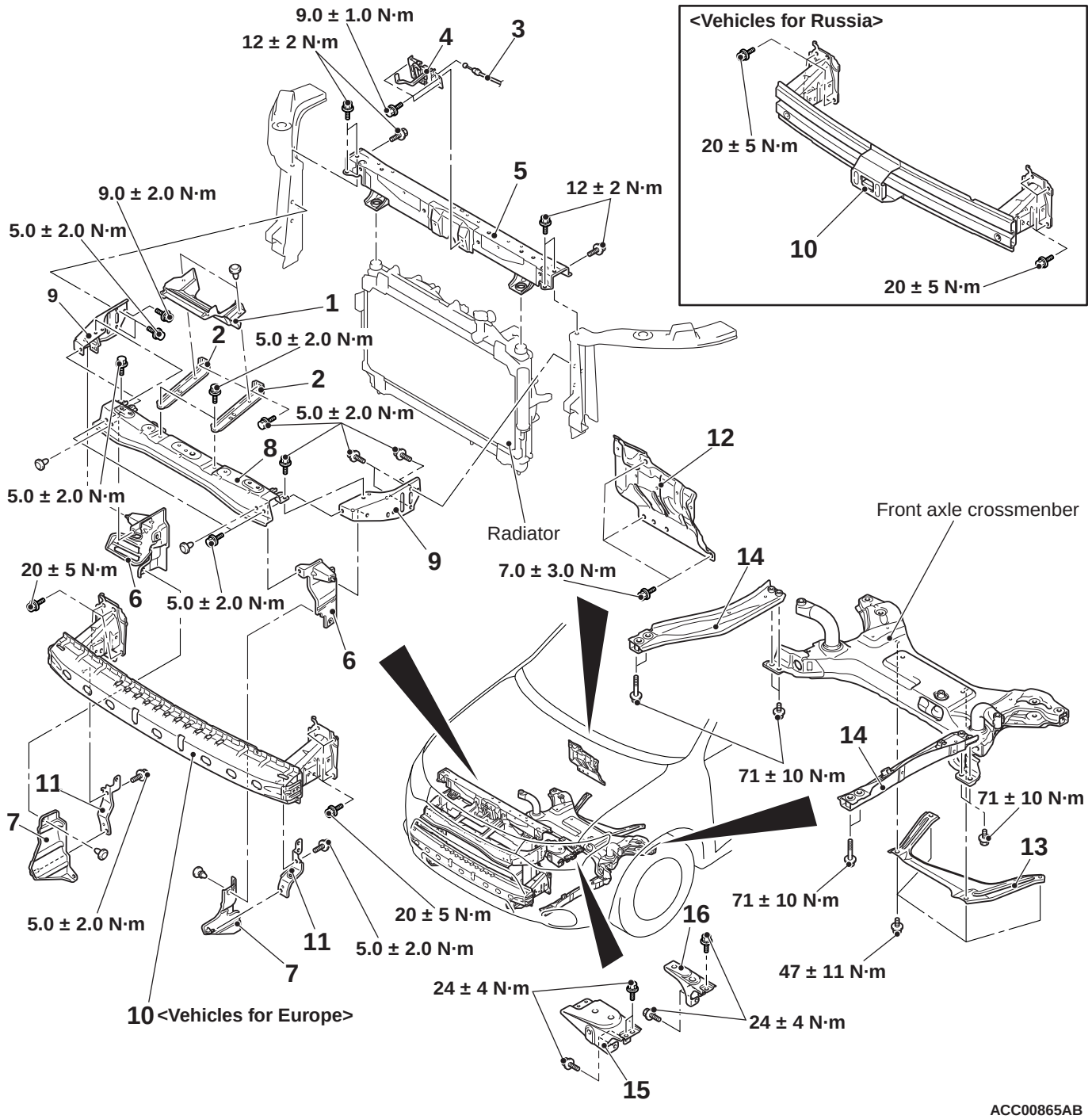

ACC00865AB

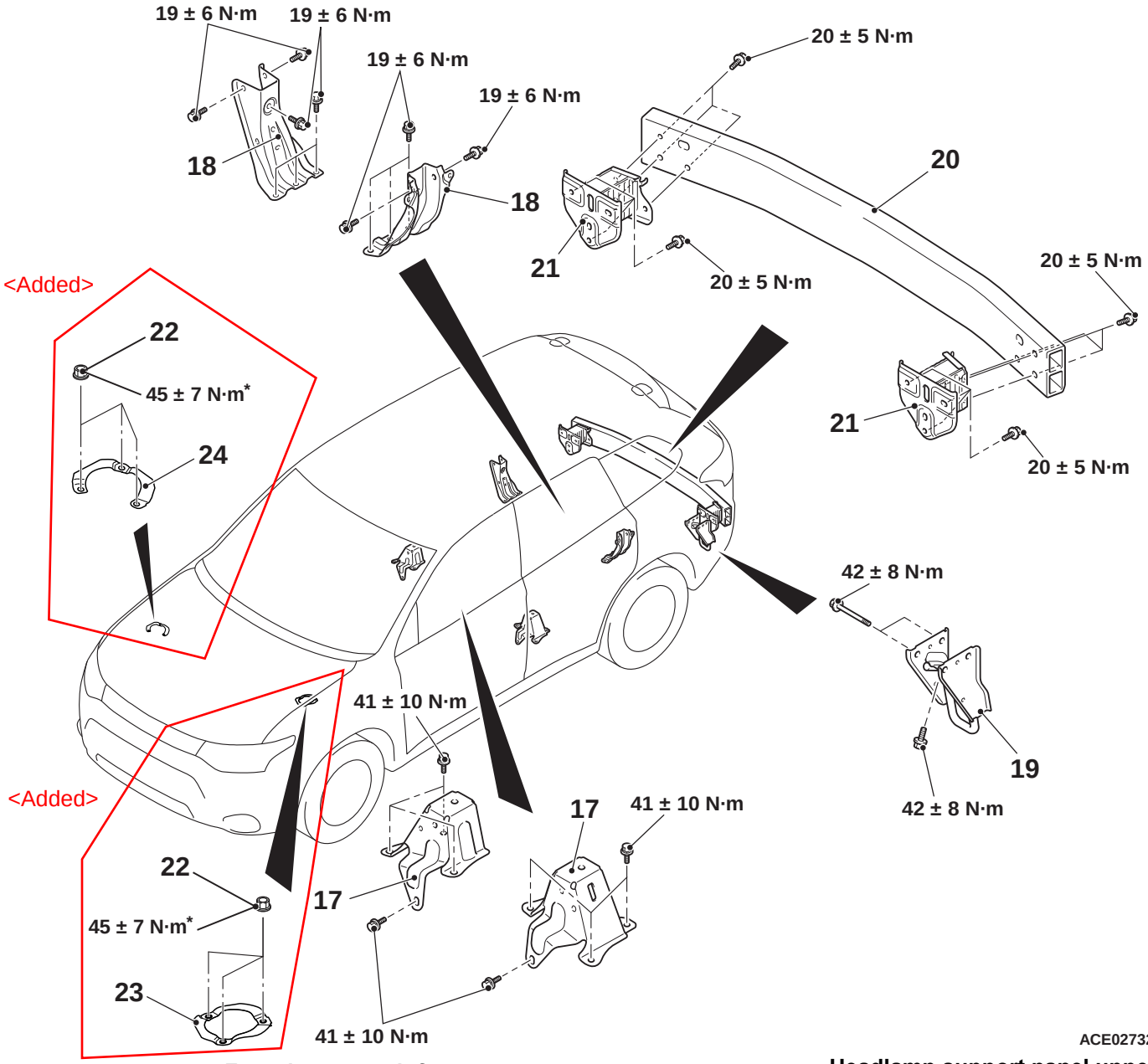

Front bumper reinforcement stay removal steps

- Radiator grille (Refer to GROUP 51 – Radiator Grille .)

1. Latch cover
2. Front bumper reinforcement stay

Headlamp support panel upper removal steps

- Radiator grille (Refer to GROUP 51 – Radiator Grille .)

1. Latch cover
2. Front bumper reinforcement stay
3. Hood lock release cable
4. Hood latch

- Front impact sensor (Refer to GROUP 52B – Front Impact Sensor .)

Headlamp support panel upper removal steps (Continued)

- Support upper insulator (Refer to GROUP 14A – Radiator <4B1, 4J1>, <4N1>.)

>>D<< 5. Headlamp support panel upper

Airguide removal steps

- Front bumper assembly (Refer to GROUP 51 – Front Bumper Assembly .)

6. Airguide upper
7. Airguide lower

Front bumper reinforcement A removal steps

- Radiator grille (Refer to GROUP 51 – Radiator Grille .)

1. Latch cover
2. Front bumper reinforcement stay

Front bumper reinforcement A removal steps (Continued)

- Front bumper assembly (Refer to GROUP 51 – Front Bumper Assembly .)

6. Airguide lower
7. Airguide upper
8. Front bumper reinforcement A

Front bumper side reinforcement removal steps

- Radiator grille (Refer to GROUP 51 – Radiator Grille .)

1. Latch cover
2. Front bumper reinforcement stay

- Front bumper assembly (Refer to GROUP 51 – Front Bumper Assembly .)

6. Airguide lower
7. Airguide upper
8. Front bumper reinforcement A
9. Front bumper side reinforcement

Front bumper reinforcement B removal

- Front bumper assembly (Refer to GROUP 51 – Front Bumper Assembly .)

>>C<< 10. Front bumper reinforcement B

Front bumper side reinforcement lower removal

- Engine room under cover front A (Refer to GROUP 51 – Under Cover .)

11. Front bumper side reinforcement lower

Dash panel heat protector removal

12. Dash panel heat protector

Front floor backbone brace removal

13. Front floor backbone brace

Front end side panel removal

14. Front end side panel

Battery bracket removal steps <2200>

- Battery tray (Refer to GROUP 54A – Battery .)

>>B<< 15. Battery bracket A
>>B<< 16. Battery bracket B

Body loose panel bracket removal

- Second seat assembly (Refer to GROUP 52A – Second Seat .)

17. Body loose panel bracket

Rear wheelhouse inner panel brace removal steps

- Quarter trim, lower (Refer to GROUP 52A – Interior Trim .)

18. Rear wheelhouse inner panel brace

Tie down hook rear removal

19. Tie down hook rear

Rear bumper reinforcement removal steps

- Rear bumper assembly (Refer to GROUP 51 – Rear Bumper Assembly .)

>>A<< 20. Rear bumper beam <Vehicles for Europe>
21. Rear bumper reinforcement <Added>

Front suspension strut stiffener plate removal steps

22. Strut mounting nut
>>E<< 23. Front suspension strut stiffener plate (LH)
>>E<< 24. Front suspension strut stiffener plate (RH)

INSTALLATION SERVICE POINTS

>>A<< REAR BUMPER BEAM INSTALLATION

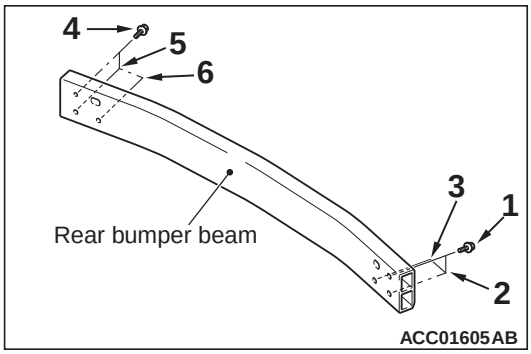

Tighten the rear bumper beam bolts in the numerical order to 20 ± 5 N·m.

>>B<< BATTERY BRACKET A, B INSTALLATION

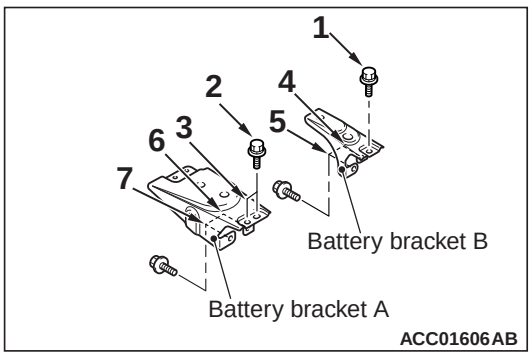

Tighten the battery bracket A, B bolts in the numerical order to 24 ± 4 N·m.

<Added>

>>C<< FRONT BUMPER REINFORCEMENT B INSTALLATION

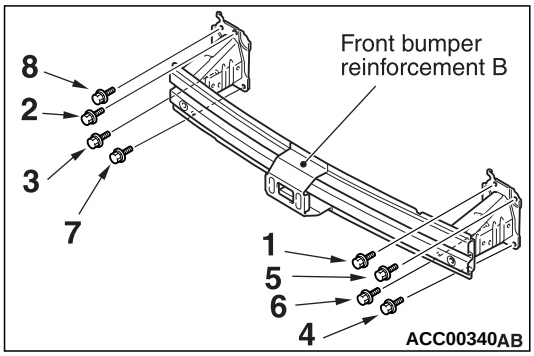

Tighten the front bumper reinforcement B bolts in the numerical order to 20 ± 5 N·m.

>>D<< HEADLAMP SUPPORT PANEL UPPER INSTALLATION

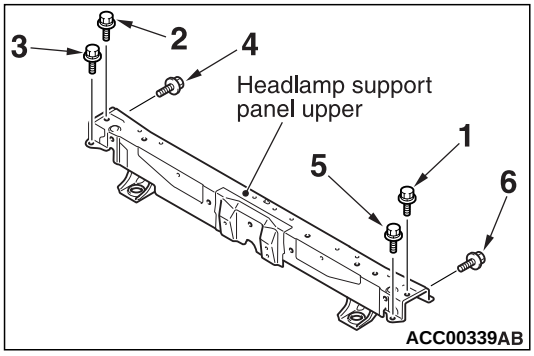

Tighten the headlamp support panel upper bolts in the numerical order to 12 ± 2 N·m.

>>E<< FRONT SUSPENSION STRUT STIFFENER PLATE (LH, RH) INSTALLATION

⚠ CAUTION

The front suspension strut stiffener plate (LH, RH) must be installed in a particular direction. Be sure to install them as shown.

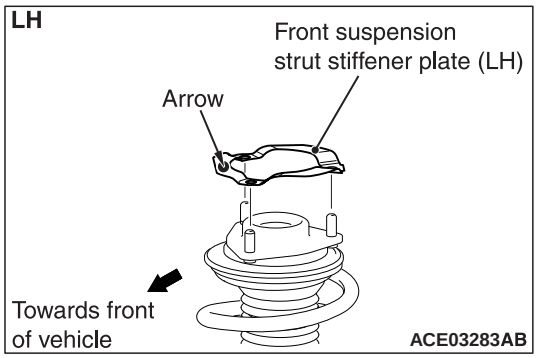

1. Install the front suspension strut stiffener plate (LH) so that the arrow faces towards the front of the vehicle.

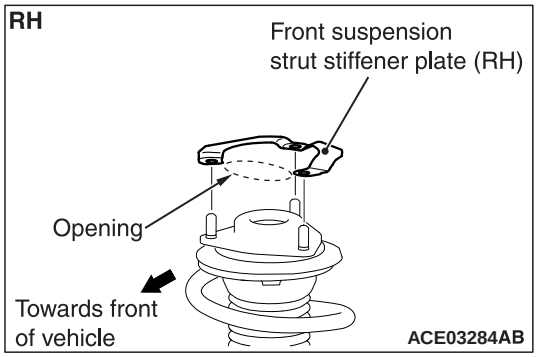

2. Install the front suspension strut stiffener plate (RH) so that the opening faces towards the front of the vehicle.

LOOSE PANEL

REMOVAL AND INSTALLATION

M1421003101491

⚠ CAUTION

- **Disconnect the battery (–) terminal and wait for 60 seconds or more before starting work. Insulate the disconnected (–) terminal by wrapping a tape.**
- **Handle the front impact sensor with sufficient caution, and do not drop the sensor or allow contact with water, oil, or others. If a dent, crack, deformation and others are discovered, replace it with a new one.** <Added>

- **The parts indicated by * indicates parts which should be temporarily tightened, and then fully tightened with the vehicle standing on the ground at kerb weight.**

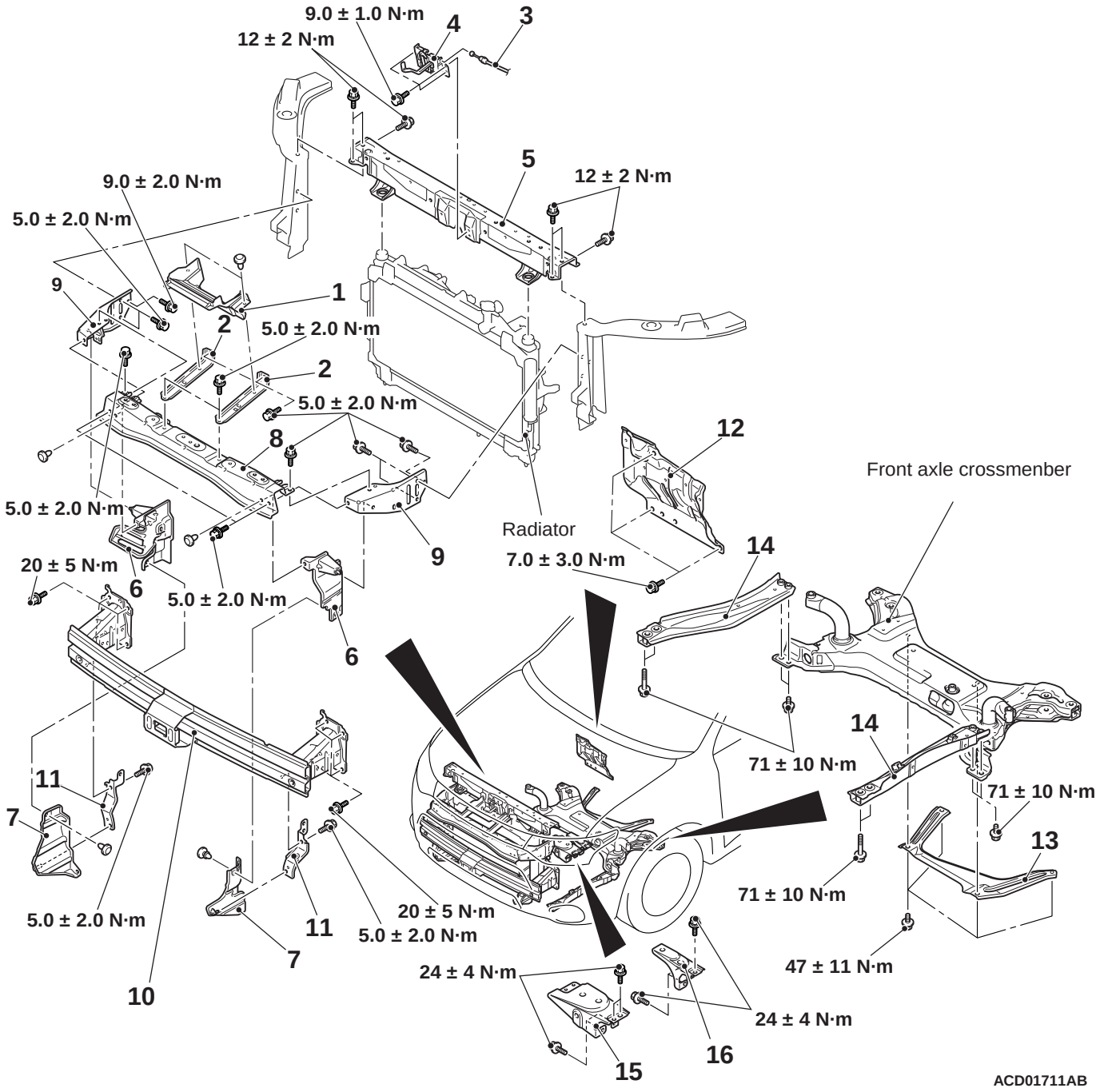

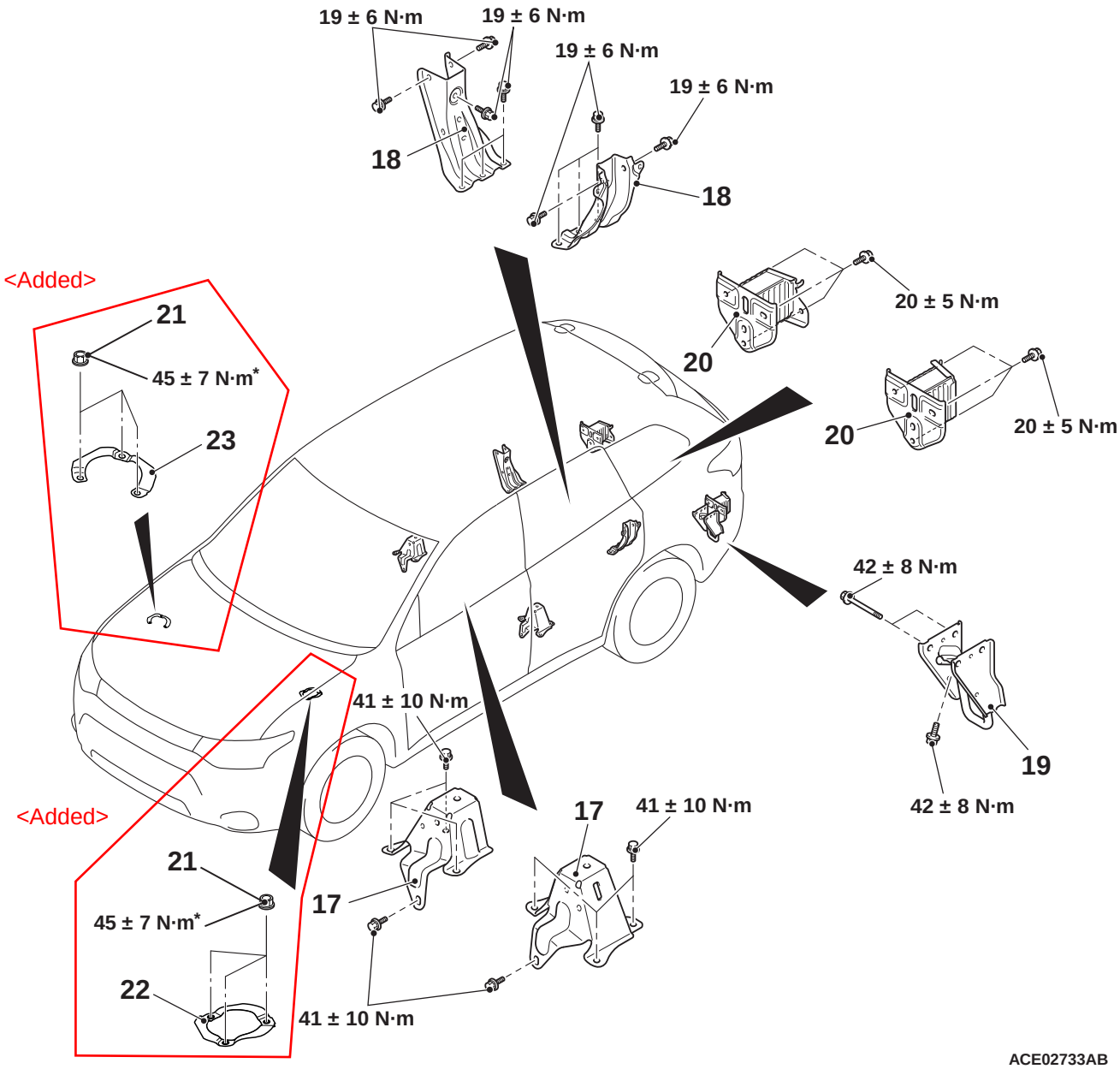

ACE02733AB

Front bumper reinforcement stay removal steps

- Radiator grille (Refer to GROUP 51 – Radiator Grille .)

1. Latch cover
2. Front bumper reinforcement stay

Headlamp support panel upper removal steps

- Radiator grille (Refer to GROUP 51 – Radiator Grille .)

1. Latch cover
2. Front bumper reinforcement stay
3. Hood lock release cable
4. Hood latch

- Front impact sensor (Refer to GROUP 52B – Front Impact Sensor .)

Headlamp support panel upper removal steps (Continued)

- Support upper insulator (Refer to GROUP 14 – Radiator <4B1>, <6B3>).

>>C<< 5. Headlamp support panel upper

Airguide removal steps

- Front bumper assembly (Refer to GROUP 51 – Front Bumper Assembly .)

6. Airguide upper
7. Airguide lower

Front bumper reinforcement A removal steps

- Radiator grille (Refer to GROUP 51 – Radiator Grille .)

1. Latch cover
2. Front bumper reinforcement stay

Front bumper reinforcement A removal steps (Continued)

- Front bumper assembly (Refer to GROUP 51 – Front Bumper Assembly .)

6. Airguide lower
7. Airguide upper
8. Front bumper reinforcement A

Front bumper side reinforcement removal steps

- Radiator grille (Refer to GROUP 51 – Radiator Grille .)

1. Latch cover
2. Front bumper reinforcement stay

- Front bumper assembly (Refer to GROUP 51 – Front Bumper Assembly .)

6. Airguide lower
7. Airguide upper
8. Front bumper reinforcement A
9. Front bumper side reinforcement

Front bumper reinforcement B removal

- Front bumper assembly (Refer to GROUP 51 – Front Bumper Assembly .)

>>B<< 10. Front bumper reinforcement B

Front bumper side reinforcement lower removal

- Engine room under cover front A (Refer to GROUP 51 – Under Cover .)

11. Front bumper side reinforcement lower

Dash panel heat protector removal

12. Dash panel heat protector

Front floor backbone brace removal

13. Front floor backbone brace

Front end side panel removal

14. Front end side panel

Battery bracket removal steps <6B3>

- Battery tray (Refer to GROUP 54A – Battery .)

>>A<< 15. Battery bracket A
>>A<< 16. Battery bracket B

Body loose panel bracket removal

- Second seat assembly (Refer to GROUP 52A – Second Seat .)

17. Body loose panel bracket

Rear wheelhouse inner panel brace removal steps

- Quarter trim, lower (Refer to GROUP 52A – Interior Trim .)

18. Rear wheelhouse inner panel brace

Tie down hook rear removal

19. Tie down hook rear

Rear bumper reinforcement removal steps

- Rear bumper assembly (Refer to GROUP 51 – Rear Bumper Assembly .)

20. Rear bumper reinforcement <Added>

Front suspension strut stiffener plate removal steps

21. Strut mounting nut
>>D<< 22. Front suspension strut stiffener plate (LH)
>>D<< 23. Front suspension strut stiffener plate (RH)

INSTALLATION SERVICE POINTS

>>A<< BATTERY BRACKET A, B INSTALLATION

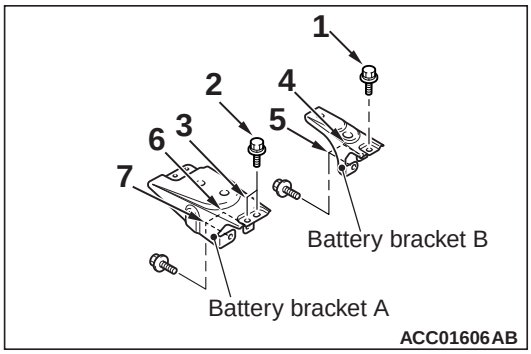

Tighten the battery bracket A, B bolts in the numerical order to 24 ± 4 N·m.

>>B<< FRONT BUMPER REINFORCEMENT B INSTALLATION

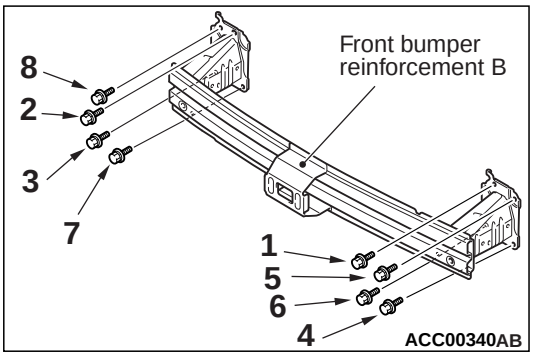

Tighten the front bumper reinforcement B bolts in the numerical order to 20 ± 5 N·m.

<Added>

>>C<< HEADLAMP SUPPORT PANEL UPPER INSTALLATION

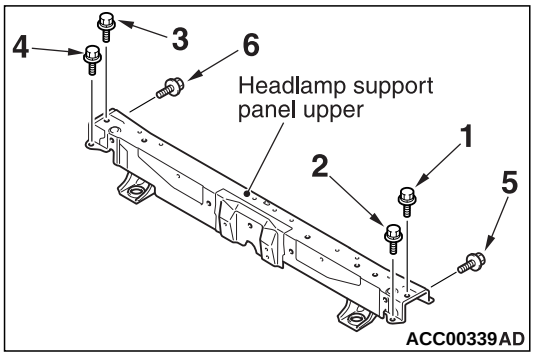

Tighten the headlamp support panel upper bolts in the numerical order to 12 ± 2 N·m.

>>D<< FRONT SUSPENSION STRUT STIFFENER PLATE (LH, RH) INSTALLATION

⚠ CAUTION

The front suspension strut stiffener plate (LH, RH) must be installed in a particular direction. Be sure to install them as shown.

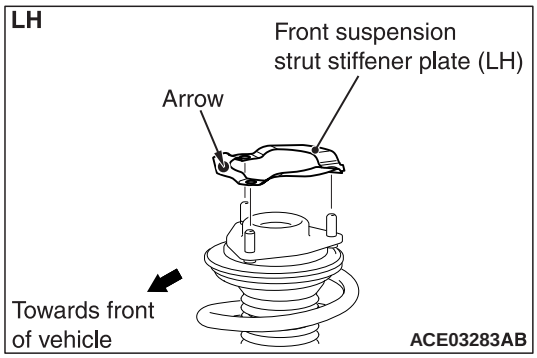

1. Install the front suspension strut stiffener plate (LH) so that the arrow faces towards the front of the vehicle.

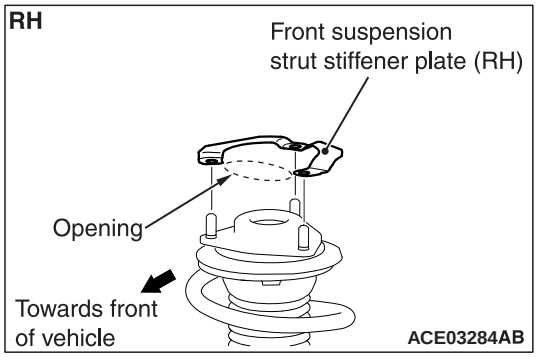

2. Install the front suspension strut stiffener plate (RH) so that the opening faces towards the front of the vehicle.

LOOSE PANEL

REMOVAL AND INSTALLATION

M1421003101446

⚠ CAUTION

- **Disconnect the battery (–) terminal and wait for 60 seconds or more before starting work. Insulate the disconnected (–) terminal by wrapping a tape.**
- **Handle the front impact sensor with sufficient caution, and do not drop the sensor or allow contact with water, oil, or others. If a dent, crack, deformation and others are discovered, replace it with a new one.** <Added>

- **The parts indicated by * indicates parts which should be temporarily tightened, and then fully tightened with the vehicle standing on the ground and the kerb weight condition.**

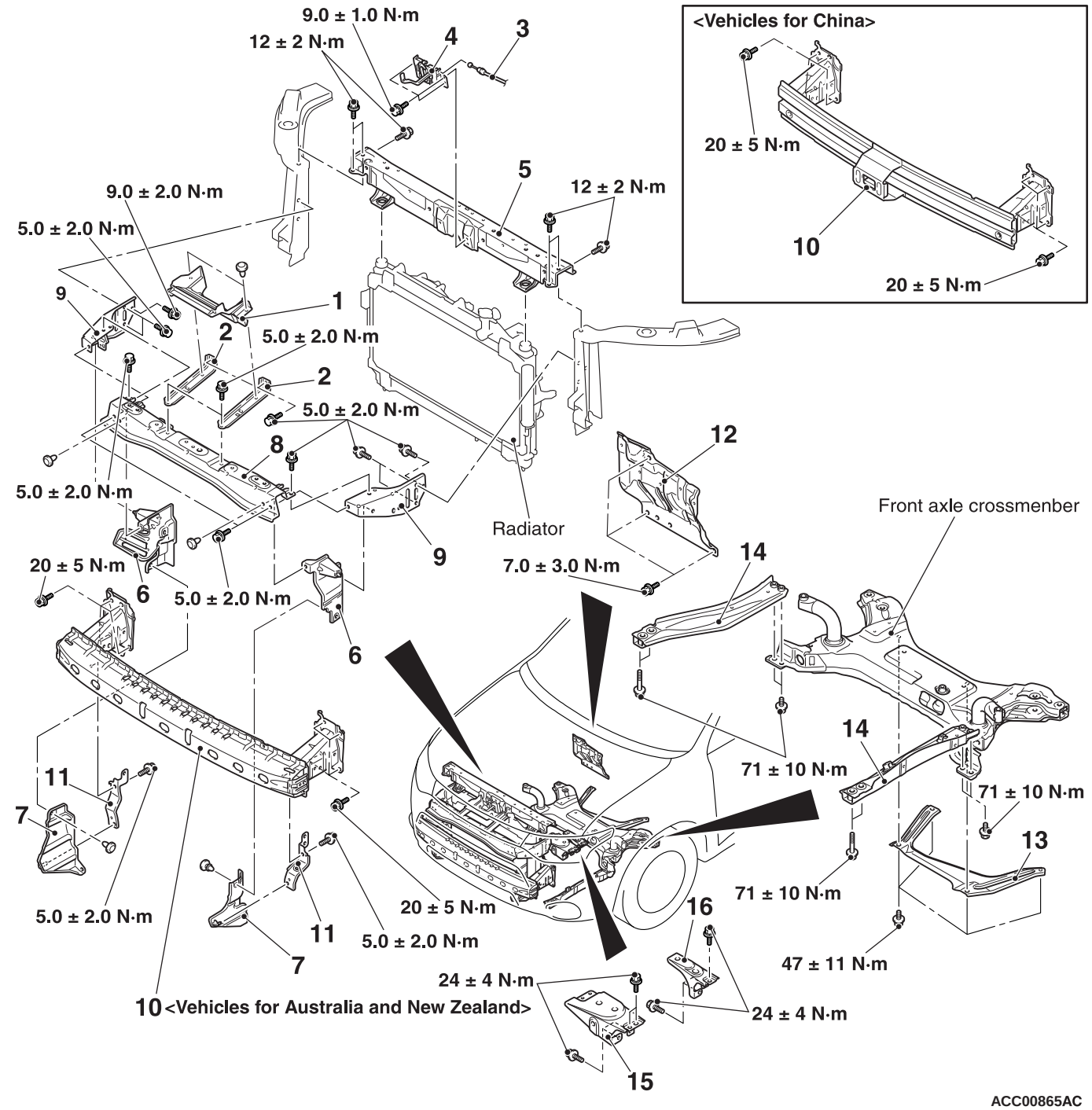

ACC00865AC

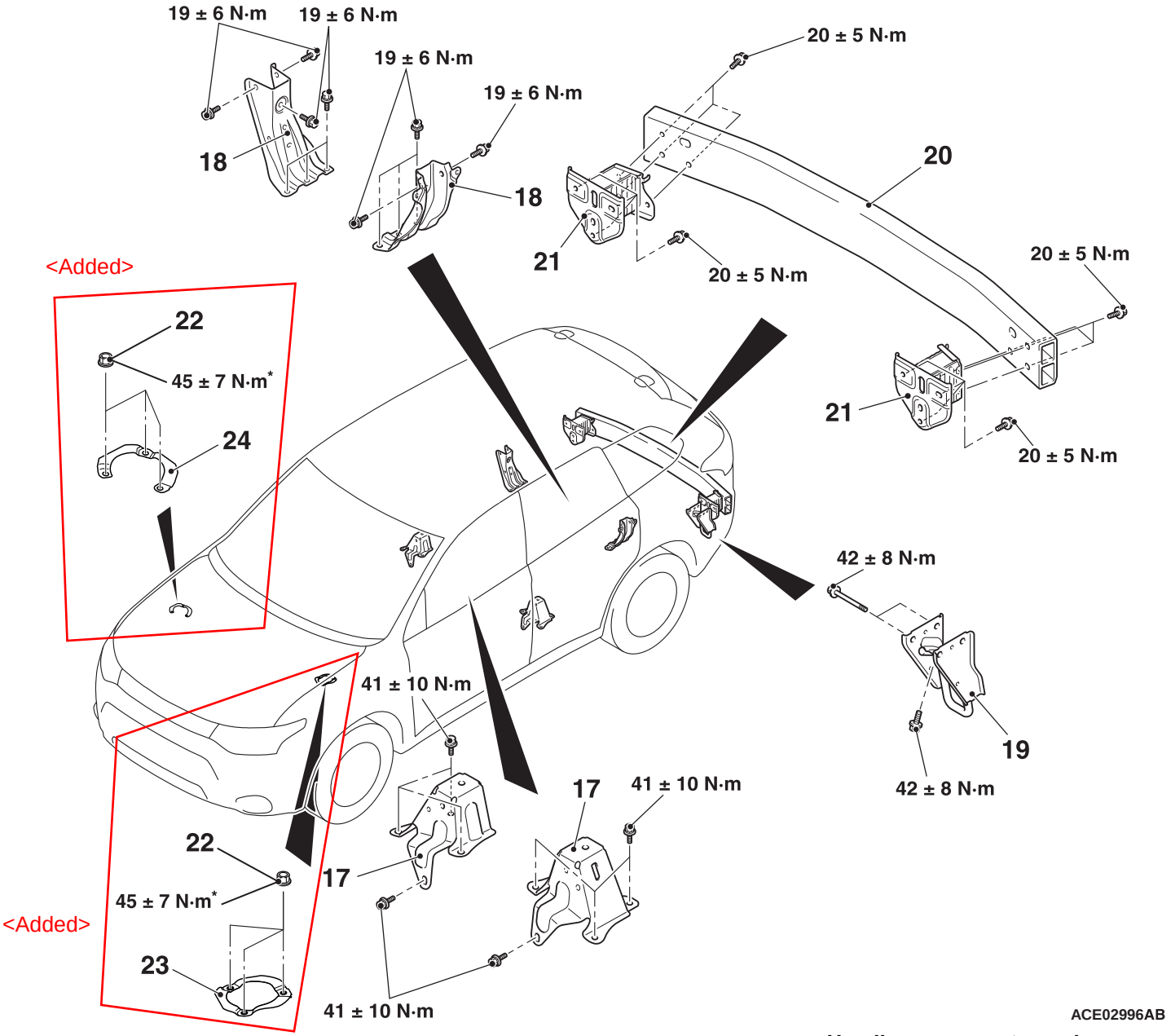

ACE02996AB

Front bumper reinforcement stay removal steps

- Radiator grille (Refer to GROUP 51 – Radiator Grille .)

1. Latch cover
2. Front bumper reinforcement stay

Headlamp support panel upper removal steps

- Radiator grille (Refer to GROUP 51 – Radiator Grille .)

1. Latch cover
2. Front bumper reinforcement stay
3. Hood lock release cable
4. Hood latch

- Front impact sensor (Refer to GROUP 52B – Front Impact Sensor .)

Headlamp support panel upper removal steps (Continued)

- Support upper insulator (Refer to GROUP 14 – Radiator <4J1>, <4N1>.)

>>D<< 5. Headlamp support panel upper

Airguide removal steps

- Front bumper assembly (Refer to GROUP 51 – Front Bumper Assembly .)

6. Airguide upper
7. Airguide lower

Front bumper reinforcement A removal steps

- Radiator grille (Refer to GROUP 51 – Radiator Grille .)

1. Latch cover
2. Front bumper reinforcement stay

Front bumper reinforcement A removal steps (Continued)

- Front bumper assembly (Refer to GROUP 51 – Front Bumper Assembly .)

6. Airguide lower
7. Airguide upper
8. Front bumper reinforcement A

Front bumper side reinforcement removal steps

- Radiator grille (Refer to GROUP 51 – Radiator Grille .)

1. Latch cover
2. Front bumper reinforcement stay

- Front bumper assembly (Refer to GROUP 51 – Front Bumper Assembly .)

6. Airguide lower
7. Airguide upper
8. Front bumper reinforcement A
9. Front bumper side reinforcement

Front bumper reinforcement B removal

- Front bumper assembly (Refer to GROUP 51 – Front Bumper Assembly .)

>>C<< 10. Front bumper reinforcement B

Front bumper side reinforcement lower removal

- Engine room under cover front A (Refer to GROUP 51 – Under Cover .)

11. Front bumper side reinforcement lower

Dash panel heat protector removal <2000, 2400>

12. Dash panel heat protector

Front floor backbone brace removal

13. Front floor backbone brace

Front end side panel removal

14. Front end side panel

Battery bracket removal steps <2200>

- Battery tray (Refer to GROUP 54A – Battery .)

>>B<< 15. Battery bracket A
>>B<< 16. Battery bracket B

Body loose panel bracket removal

- Second seat assembly (Refer to GROUP 52A – Second Seat .)

17. Body loose panel bracket

Rear wheelhouse inner panel brace removal steps

- Quarter trim, lower (Refer to GROUP 52A – Interior Trim .)

18. Rear wheelhouse inner panel brace

Tie down hook rear removal

19. Tie down hook rear

Rear bumper reinforcement removal steps

- Rear bumper assembly (Refer to GROUP 51 – Rear Bumper Assembly .)

>>A<< 20. Rear bumper beam <Vehicles for China>

<Added>
21. Rear bumper reinforcement

Front suspension strut stiffener plate removal steps

22. Strut mounting nut
>>E<< 23. Front suspension strut stiffener plate (LH)
>>E<< 24. Front suspension strut stiffener plate (RH)

INSTALLATION SERVICE POINTS

>>A<< REAR BUMPER BEAM INSTALLATION

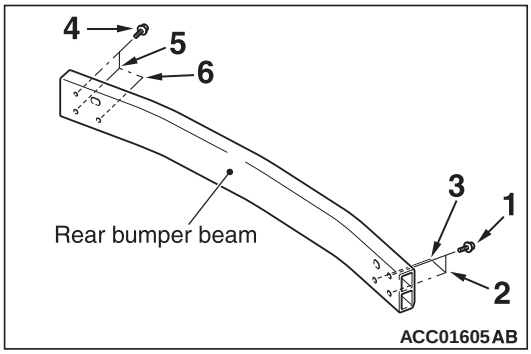

Tighten the rear bumper beam bolts in the numerical order to 20 ± 5 N·m.

>>B<< BATTERY BRACKET A, B INSTALLATION

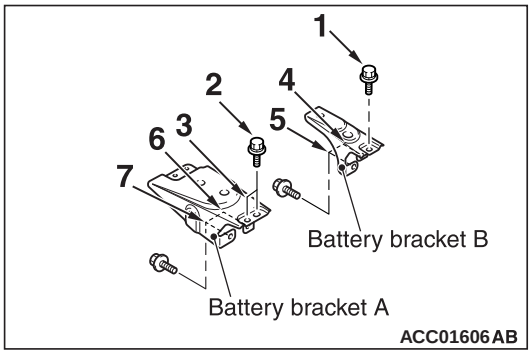

Tighten the battery bracket A, B bolts in the numerical order to 24 ± 4 N·m.

<Added>

>>C<< FRONT BUMPER REINFORCEMENT B INSTALLATION

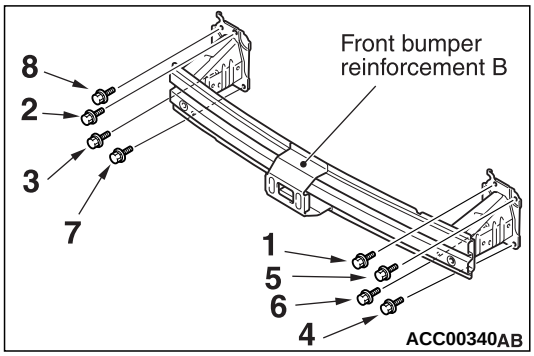

Tighten the front bumper reinforcement B bolts in the numerical order to 20 ± 5 N·m.

>>D<< HEADLAMP SUPPORT PANEL UPPER INSTALLATION

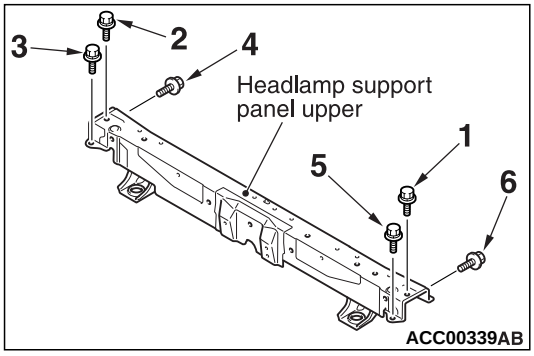

Tighten the headlamp support panel upper bolts in the numerical order to 12 ± 2 N·m.

>>E<< FRONT SUSPENSION STRUT STIFFENER PLATE (LH, RH) INSTALLATION

⚠ CAUTION

The front suspension strut stiffener plate (LH, RH) must be installed in a particular direction. Be sure to install them as shown.

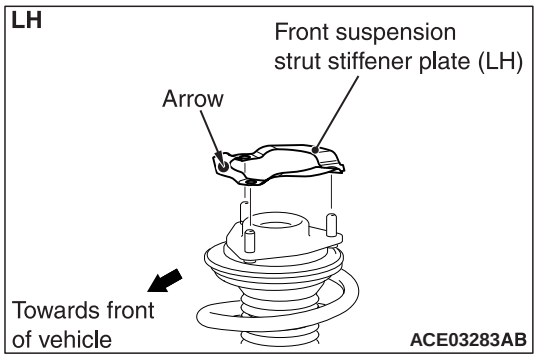

1. Install the front suspension strut stiffener plate (LH) so that the arrow faces towards the front of the vehicle.

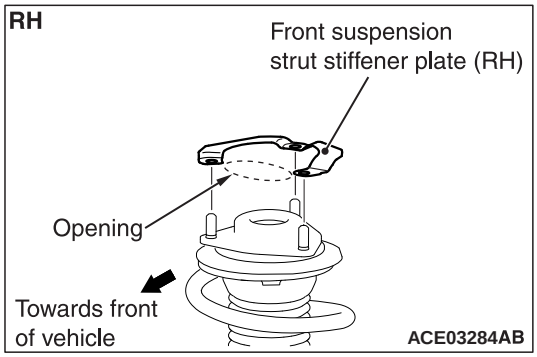

2. Install the front suspension strut stiffener plate (RH) so that the opening faces towards the front of the vehicle.

STRUT ASSEMBLY

REMOVAL AND INSTALLATION

M1332001101641

⚠ CAUTION

- **The parts indicated by *1 indicates parts which should be temporarily tightened, and then fully tightened with the vehicle standing on the ground at curb weight.**
- **The parts indicated by *2 is the nuts with friction coefficient stabilizer. Prior to reinstallation, ensure there is no damage, clean dust and soiling from the bearing and thread surfaces, and tighten it to the specified torque.**

Post-installation Operation
- Front Wheel Alignment Check and Adjustment.

<Old>

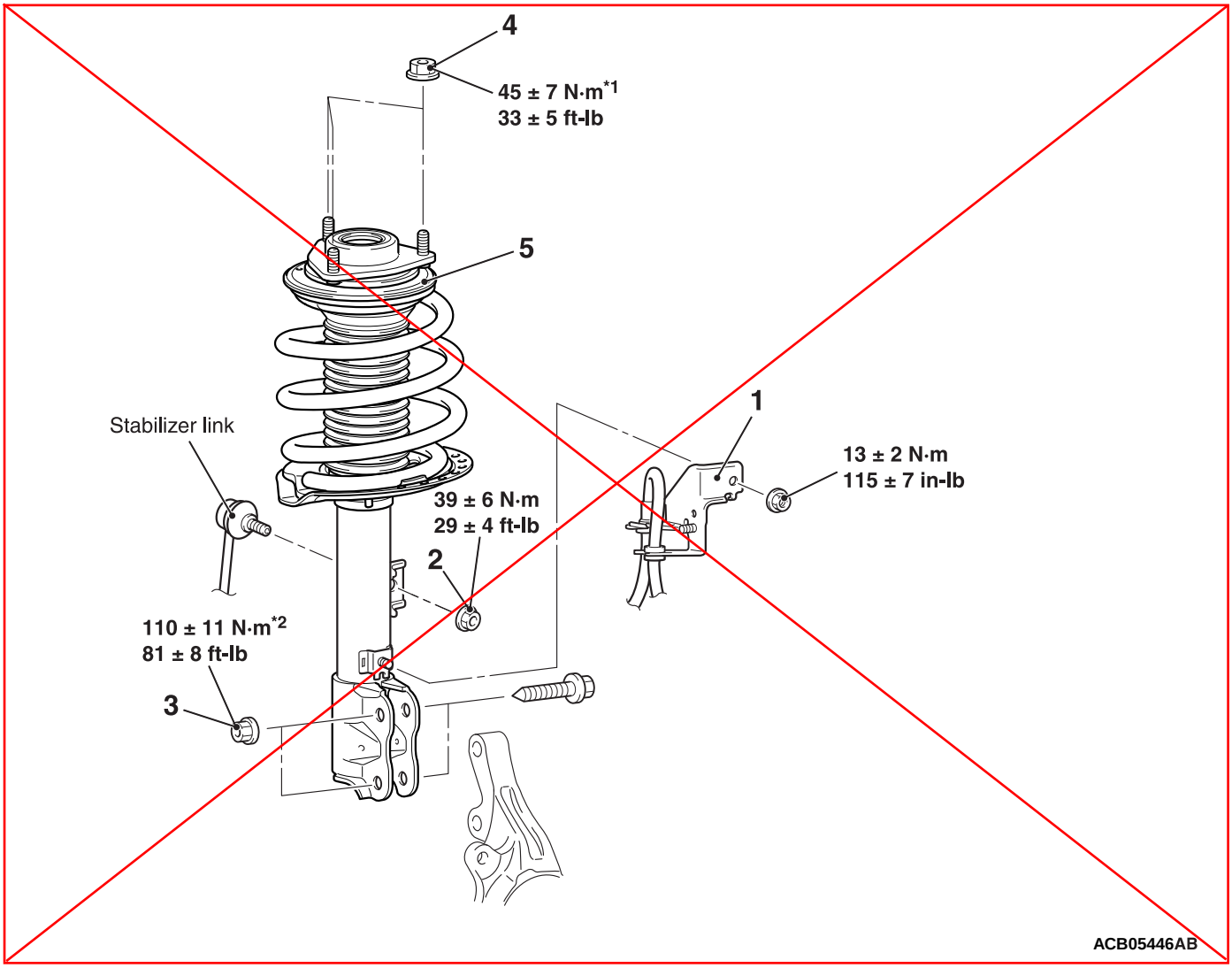

<New>

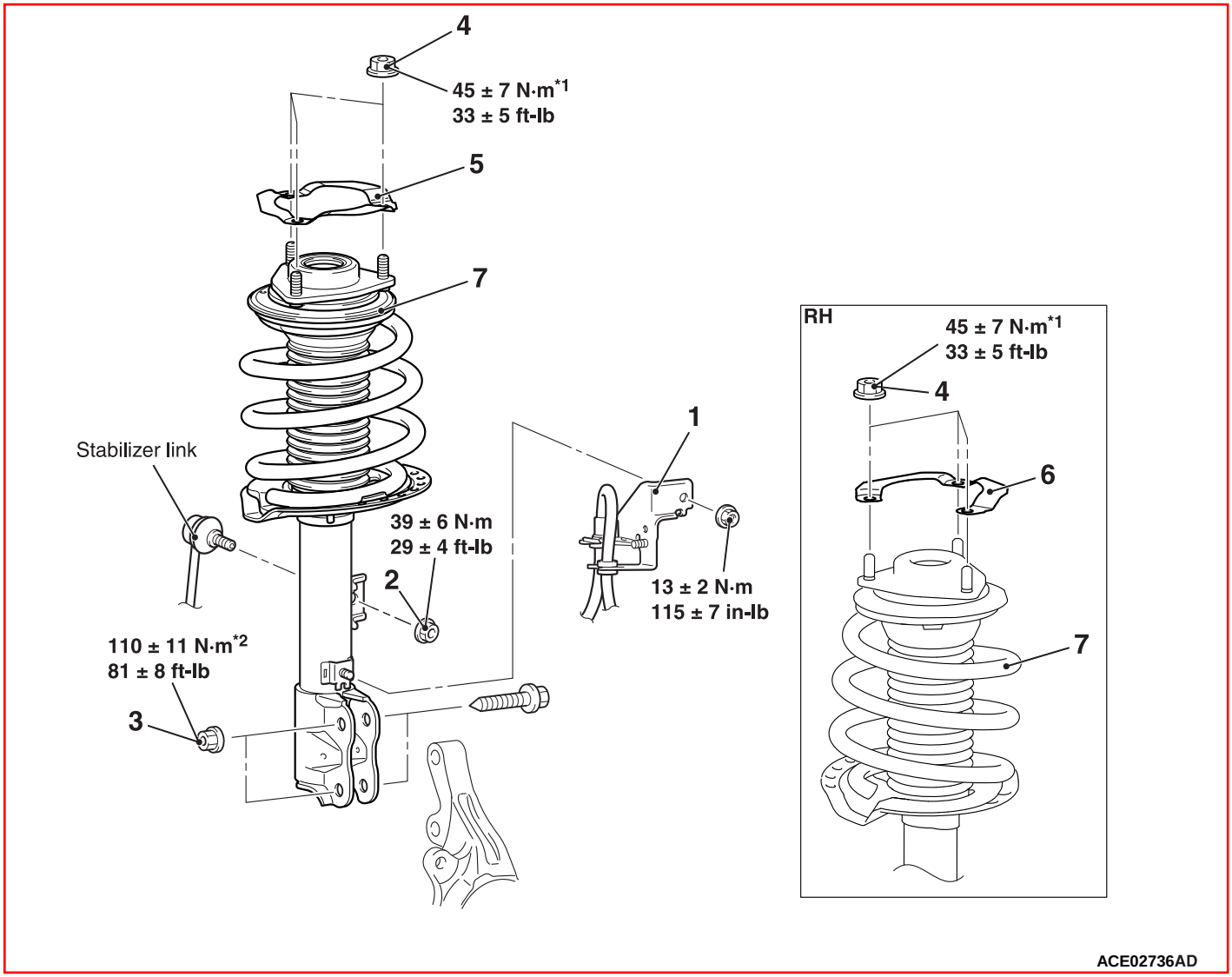

Removal steps

	1.	Brake hose bracket
<<A>> >>A<<	2.	Stabilizer link and strut connection nut
	3.	Knuckle and strut connection
<Added>	4.	Strut mounting nut
>>B<<	5.	Front suspension strut stiffener plate (LH)
>>B<<	6.	Front suspension strut stiffener plate (RH)
	7.	Strut assembly

REMOVAL SERVICE POINT
<<A>> STABILIZER LINK AND STRUT CONNECTION NUT REMOVAL

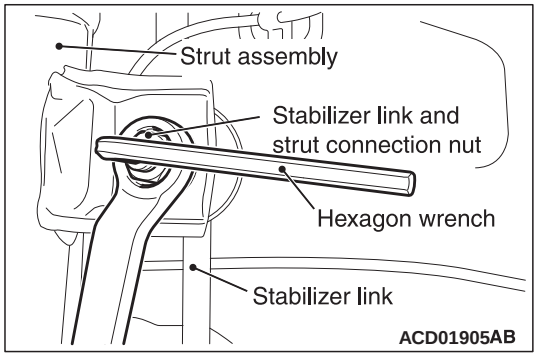

Use a wrench to counterhold the stabilizer link as shown. Then use a hexagon wrench to remove the nut securing the stabilizer link to the strut.

<Added>

INSTALLATION SERVICE POINT
>>A<< STABILIZER LINK AND STRUT CONNECTION NUT INSTALLATION

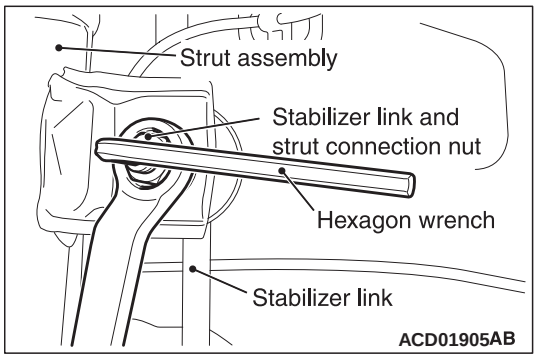

Use a wrench to counterhold the stabilizer link as shown. Then use a hexagon wrench to install the nut securing the stabilizer link to the strut.

>>B<< FRONT SUSPENSION STRUT STIFFENER PLATE (LH, RH) INSTALLATION

⚠ CAUTION

The front suspension strut stiffener plate (LH, RH) must be installed in a particular direction. Be sure to install them as shown.

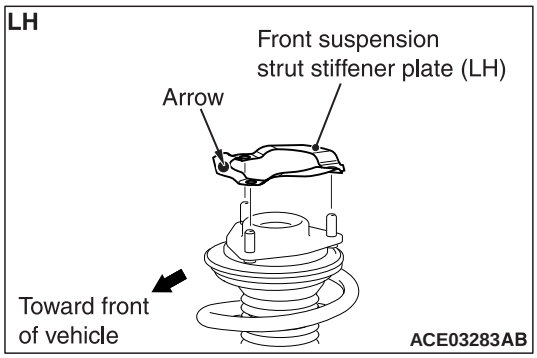

1. Install the front suspension strut stiffener plate (LH) so that the arrow faces toward the front of the vehicle.

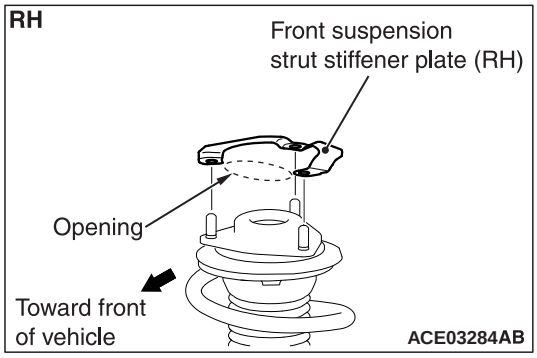

2. Install the front suspension strut stiffener plate (RH) so that the opening faces toward the front of the vehicle.

LOOSE PANEL

REMOVAL AND INSTALLATION

M1421003101565

⚠ CAUTION

- **Disconnect the battery (–) terminal and wait for 60 seconds or more before starting work. Insulate the disconnected (–) terminal by wrapping a tape.**
- **Handle the front impact sensor with sufficient caution, and do not drop the sensor or allow contact with water, oil, or others. If a dent, crack, deformation and others are discovered, replace it with a new one.** <Added>
- **The parts indicated by * indicates parts which should be temporarily tightened, and then fully tightened with the vehicle standing on the ground at curb weight.**

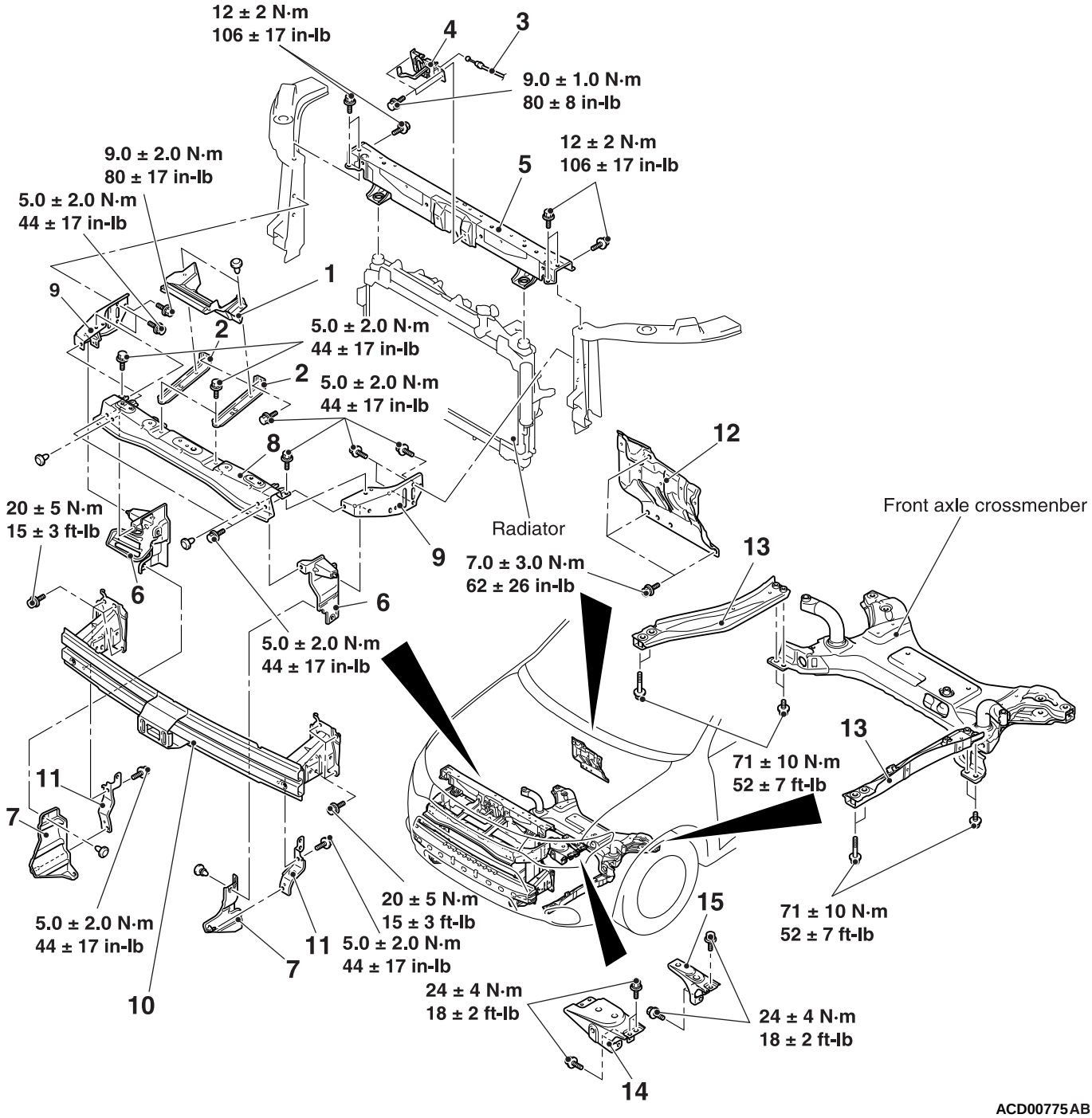

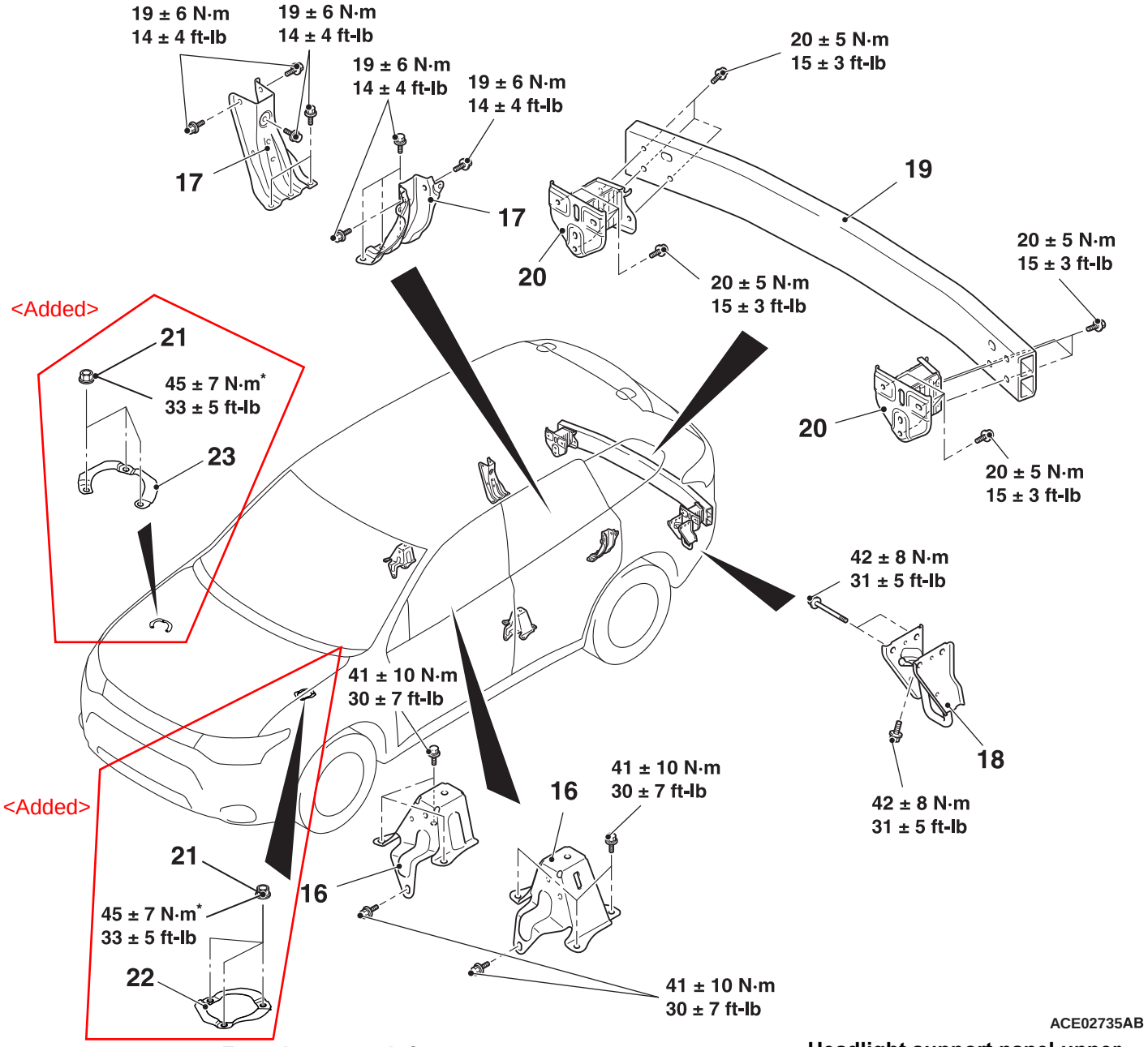

Front bumper reinforcement stay removal steps

- Radiator grille (Refer to GROUP 51 – Radiator Grille .)

1. Latch cover
2. Front bumper reinforcement stay

Headlight support panel upper removal steps

- Radiator grille (Refer to GROUP 51 – Radiator Grille .)

1. Latch cover
2. Front bumper reinforcement stay
3. Hood lock release cable
4. Hood latch

- Front impact sensor (Refer to GROUP 52B – Front Impact Sensor .)

Headlight support panel upper removal steps (Continued)

- Support upper insulator (Refer to GROUP 14 – Radiator .)

>>D<< 5. Headlight support panel upper

Airguide removal steps

- Front bumper assembly (Refer to GROUP 51 – Front Bumper Assembly .)

6. Airguide upper
7. Airguide lower

Front bumper reinforcement A removal steps

- Radiator grille (Refer to GROUP 51 – Radiator Grille .)

1. Latch cover
2. Front bumper reinforcement stay

Front bumper reinforcement A removal steps (Continued)

- Front bumper assembly (Refer to GROUP 51 – Front Bumper Assembly .)

6. Airguide lower
7. Airguide upper
8. Front bumper reinforcement A

Front bumper side reinforcement removal steps

- Radiator grille (Refer to GROUP 51 – Radiator Grille .)

1. Latch cover
2. Front bumper reinforcement stay

- Front bumper assembly (Refer to GROUP 51 – Front Bumper Assembly .)

6. Airguide lower
7. Airguide upper
8. Front bumper reinforcement A
9. Front bumper side reinforcement

Front bumper reinforcement B removal

- Front bumper assembly (Refer to GROUP 51 – Front Bumper Assembly .)

>>C<< 10. Front bumper reinforcement B

Front bumper side reinforcement lower removal

- Engine room under cover front A (Refer to GROUP 51 – Under Cover .)

11. Front bumper side reinforcement lower

Dash panel heat protector removal

12. Dash panel heat protector

Front end side panel removal

13. Front end side panel

Battery bracket removal steps

- Battery tray (Refer to GROUP 54A – Battery .)

>>B<< 14. Battery bracket A
>>B<< 15. Battery bracket B

Body loose panel bracket removal

- Second seat assembly (Refer to GROUP 52A – Second Seat .)

16. Body loose panel bracket

Rear wheelhouse inner panel brace removal steps

- Quarter trim, lower (Refer to GROUP 52A – Interior Trim .)

17. Rear wheelhouse inner panel brace

Tie down hook rear removal

18. Tie down hook rear

Rear bumper reinforcement removal steps

- Rear bumper assembly (Refer to GROUP 51 – Rear Bumper Assembly .)

>>A<< 19. Rear bumper beam
20. Rear bumper reinforcement <Added>

Front suspension strut stiffener plate removal steps

21. Strut mounting nut
>>E< 22. Front suspension strut stiffener plate (LH)
>>E<< 23. Front suspension strut stiffener plate (RH)

INSTALLATION SERVICE POINTS

>>A<< REAR BUMPER BEAM INSTALLATION

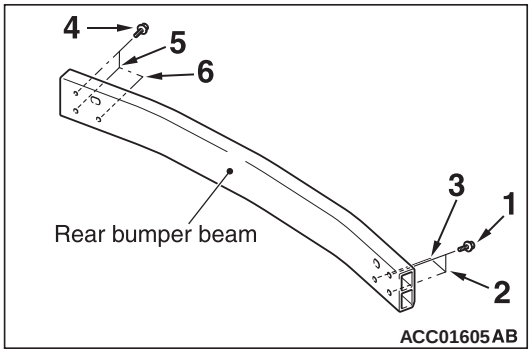

Tighten the rear bumper beam bolts in the numerical order to 20 ± 5 N·m (15 ± 3 ft-lb).

>>B<< BATTERY BRACKET A, B INSTALLATION

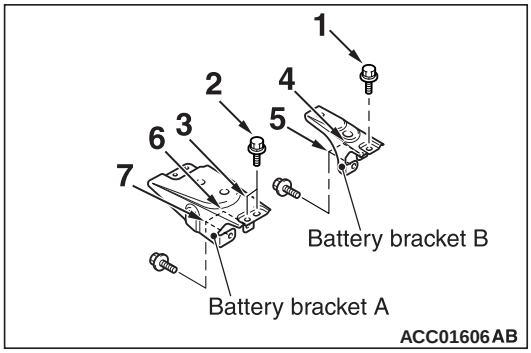

Tighten the battery bracket A, B bolts in the numerical order to 24 ± 4 N·m (18 ± 2 ft-lb).

<Added>

>>C<< FRONT BUMPER REINFORCEMENT B INSTALLATION

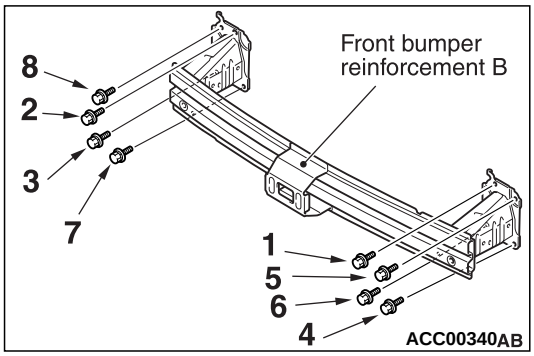

Tighten the front bumper reinforcement B bolts in the numerical order to 20 ± 5 N·m (15 ± 3 ft-lb).

>>D<< HEADLIGHT SUPPORT PANEL UPPER INSTALLATION

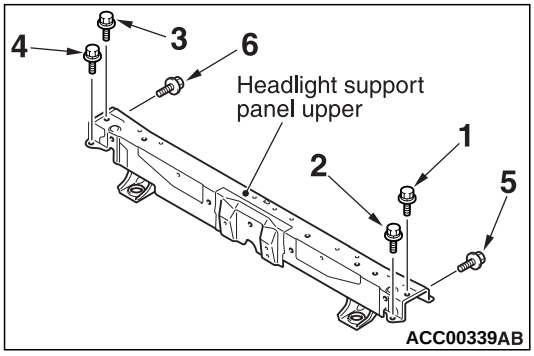

Tighten the headlight support panel upper bolts in the numerical order to 12 ± 2 N·m (106 ± 17 in-lb).

>>E<< FRONT SUSPENSION STRUT STIFFENER PLATE (LH, RH) INSTALLATION

⚠ CAUTION

The front suspension strut stiffener plate (LH, RH) must be installed in a particular direction. Be sure to install them as shown.

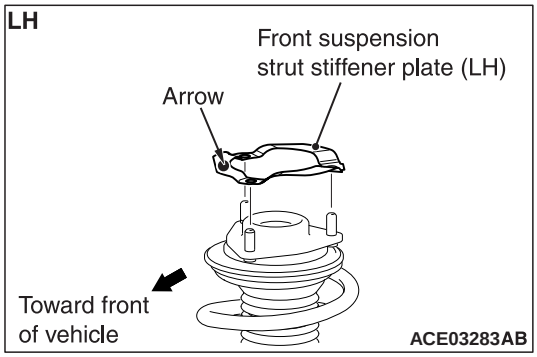

1. Install the front suspension strut stiffener plate (LH) so that the arrow faces toward the front of the vehicle.

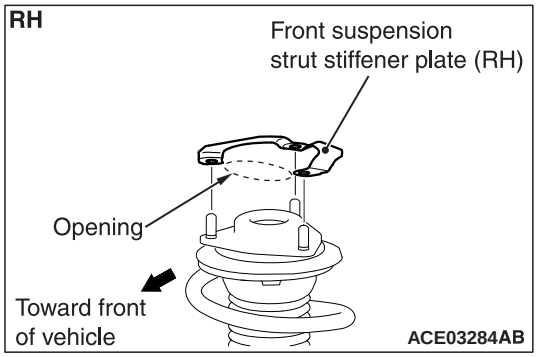

2. Install the front suspension strut stiffener plate (RH) so that the opening faces toward the front of the vehicle.