# SERVICE BULLETIN

MITSUBISHI MOTORS

GLOBAL AFTER SALES OFFICE, MITSUBISHI MOTORS CORPORATION

| | | |
|---|---|---|
| PURPOSE : CHANGE | ISSUE NO. : MSB-14EXML34-001 | DATE : 2014-04-23 |
| SUBJECT : SHOCK ABSORBER ASSEMBLY INSTALLATION | | <DESTINATION/MODEL> (MMNA/USTP/EUR/RUSSIA /G.EXP/GCC/MMAL/NZ) OUTLANDER SPORT/ASX(GA0W) <M/Y> 13-15 |
| GROUP : REAR SUSPENTION(Gr:34) | | |

**1. Description :**

Please refer to the attached document for the information about the change of mention in the applicable service manual. (The procedure of how to install the shock absorber assembly has been changed for its productivity improvement)

**2. Affected service manuals :**

Please refer to the attached document (Attached sheet 1)

**3. About the details :**

Please refer to the attached document (Attached sheets 2-4)

<EU/Russia>

| Applicable manual | Pub. No. | Applicable title (INFO ID) | Content |
|---|---|---|---|
| 2013<br>ASX<br>Workshop manual | CGAE13E2-CD (ENG)<br>CGAF13E2-CD (FRE)<br>CGAG13E2-CD (GER)<br>CGAS13E2-CD (SPA)<br>CGAI13E2-CD (ITA)<br>RUSSIA:N/A | Shock absorber assembly removal and installation<br>(M341-00-250-89600-01) | Attached sheet 2 |
| 2014<br>ASX<br>Workshop manual | CGAE14E1-CD (ENG)<br>CGAF14E1-CD (FRE)<br>CGAG14E1-CD (GER)<br>CGAS14E1-CD (SPA)<br>CGAI14E1-CD (ITA)<br>RUSSIA:N/A | Shock absorber assembly removal and installation<br>(M341-00-250-89600-01) | |
| 2015<br>ASX<br>Workshop manual | CGAE15E1-CD (ENG)<br>CGAF15E1-CD (FRE)<br>CGAG15E1-CD (GER)<br>CGAS15E1-CD (SPA)<br>CGAI15E1-CD (ITA)<br>RUSSIA:N/A | Shock absorber assembly removal and installation<br>(M341-00-250-89600-01) | |

<G.EXP/GCC>

| Applicable manual | Pub. No. | Applicable title (INFO ID) | Content |
|---|---|---|---|
| 2013<br>ASX<br>Workshop manual | PWPE1204R (ENG)<br>PWPS1205R (SPA) | Shock absorber assembly removal and installation<br>(M341-00-250-90400-01) | Attached sheet 3 |
| 2014<br>ASX<br>Workshop manual | PWPE1312R (ENG)<br>PWPS1313R (SPA) | Shock absorber assembly removal and installation<br>(M341-00-250-90400-01) | |
| 2015<br>ASX<br>Workshop manual | PWPE1412R (ENG)<br>PWPS1413R (SPA) | Shock absorber assembly removal and installation<br>(M341-00-250-90400-01) | |

<MMNA>

| Applicable manual | Pub. No. | Applicable title (INFO ID) | Content |
|---|---|---|---|
| 2013<br>Outlander sport/<br>ASX/RVR<br>Service manual | MSCD-017B-2013 | Shock absorber assembly removal and installation<br>(M341-00-250-92601-01) | Attached sheet 4 |
| 2014<br>Outlander Sport/<br>ASX/RVR<br>Service manual | MSCD-017B-2014 | Shock absorber assembly removal and installation<br>(M341-00-250-92602-01) | |

<Old> **INSTALLATION SERVICE POINT**

~~For installation service points, follow the same service procedures as 10 MY OUTLANDER.~~

<New>

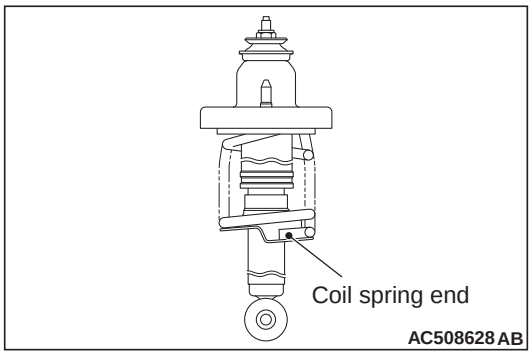


**>>A<< SHOCK ABSORBER ASSEMBLY INSTALLATION**

**<Vehicles for Europe>**

- The procedure is the same as that for 10 MY OUTLANDER.

**<Vehicles for Russia>**

- Install the shock absorber assembly so that the coil spring end faces the rear of the vehicle.

**>>B<< STABILIZER LINK AND LOWER ARM CONNECTION NUT INSTALLATION**

The procedure is the same as that for 10 MY OUTLANDER.

## INSTALLATION SERVICE POINT

<Old> >>A<< SHOCK ABSORBER ASSEMBLY INSTALLATION

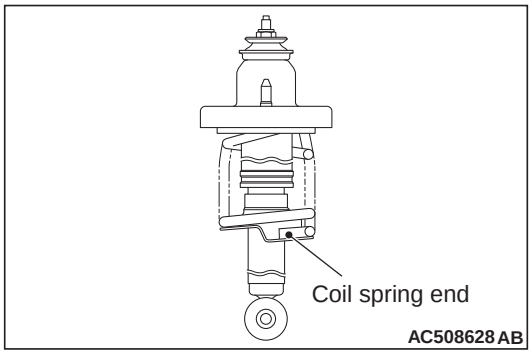


~~Install the shock absorber assembly so that the coil spring end faces the rear of the vehicle <LH>, or the coil spring end faces the front of the vehicle <RH>.~~

<New>

**<Except vehicles for General Export (MMNA production)>**

- Install the shock absorber assembly so that the coil spring end faces the rear of the vehicle <LH>, or the coil spring end faces the front of the vehicle <RH> .

**<Vehicles for General Export (MMNA production)>**

- Install the shock absorber assembly so that the coil spring end faces the rear of the vehicle.

## INSTALLATION SERVICE POINT

<Old> >>A<< SHOCK ABSORBER ASSEMBLY INSTALLATION

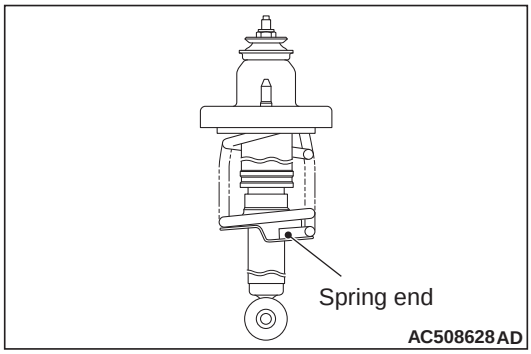


~~Install the shock absorber assembly so that the coil spring end faces the rear of the vehicle <LH>, or the coil spring end faces the front of the vehicle <RH>.~~

<New>

Install the shock absorber assembly so that the coil spring end faces the rear of the vehicle.