SERVICE BULLETIN

MITSUBISHI MOTORS

GLOBAL AFTER SALES OFFICE, MITSUBISHI MOTORS CORPORATION

PURPOSE : CHANGE	ISSUE NO. : MSB-14EXML34-001A	DATE : 2014-07-07
SUBJECT : SHOCK ABSORBER ASSEMBLY INSTALLATION		<DESTINATION/MODEL> (MMNA/USTP/EUR/RUSSIA /G.EXP/GCC/MMAL/NZ) OUTLANDER SPORT/ASX(GA0W) <M/Y> 13-15
GROUP : REAR SUSPENTION(Gr:34)		

1. Description :

Please refer to the attached document for the information about the change of mention in the applicable service manual. (The procedure of how to install the shock absorber assembly has been changed)

2. Affected service manuals :

Please refer to the attached document (Attached sheet 1)

3. About the details :

Please refer to the attached document (Attached sheets 2-4)

Attached sheet 1

<EU/Russia>

Applicable manual	Pub. No.	Applicable title (INFO ID)	Content
2013 ASX Workshop manual	CGAE13E2-CD (ENG) CGAF13E2-CD (FRE) CGAG13E2-CD (GER) CGAS13E2-CD (SPA) CGAI13E2-CD (ITA) RUSSIA:N/A	Shock absorber assembly removal and installation (M341-00-250-89600-01)	Attached sheet 2
2014 ASX Workshop manual	CGAE14E1-CD (ENG) CGAF14E1-CD (FRE) CGAG14E1-CD (GER) CGAS14E1-CD (SPA) CGAI14E1-CD (ITA) RUSSIA:N/A	Shock absorber assembly removal and installation (M341-00-250-89600-01)	
2015 ASX Workshop manual	CGAE15E1-CD (ENG) CGAF15E1-CD (FRE) CGAG15E1-CD (GER) CGAS15E1-CD (SPA) CGAI15E1-CD (ITA) RUSSIA:N/A	Shock absorber assembly removal and installation (M341-00-250-89600-01)	

<G.EXP/GCC>

Applicable manual	Pub. No.	Applicable title (INFO ID)	Content
2013 ASX Workshop manual	PWPE1204R (ENG) PWPS1205R (SPA)	Shock absorber assembly removal and installation (M341-00-250-90400-01)	Attached sheet 3
2014 ASX Workshop manual	PWPE1312R (ENG) PWPS1313R (SPA)	Shock absorber assembly removal and installation (M341-00-250-90400-01)	
2015 ASX Workshop manual	PWPE1412R (ENG) PWPS1413R (SPA)	Shock absorber assembly removal and installation (M341-00-250-90400-01)	

<MMNA>

Applicable manual	Pub. No.	Applicable title (INFO ID)	Content
2013 Outlander sport/ ASX/RVR Service manual	MSCD-017B-2013	Shock absorber assembly removal and installation (M341-00-250-92601-01)	Attached sheet 4
2014 Outlander Sport/ ASX/RVR Service manual	MSCD-017B-2014	Shock absorber assembly removal and installation (M341-00-250-92602-01)	

<Old> **INSTALLATION SERVICE POINT**

~~For installation service points, follow the same service procedures as 10 MY OUTLANDER.~~

<New>

>>A<< SHOCK ABSORBER ASSEMBLY INSTALLATION

~~**<Vehicles for Europe>**~~

~~• The procedure is the same as that for 10 MY OUTLANDER.~~

~~**<Vehicles for Russia>**~~

~~• Install the shock absorber assembly so that the coil spring end faces the rear of the vehicle.~~

<Incorrect> A

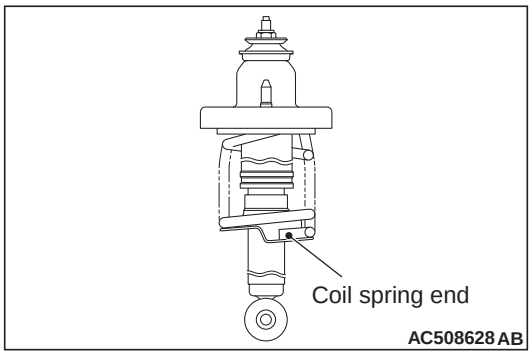

>>B<< STABILIZER LINK AND LOWER ARM CONNECTION NUT INSTALLATION

The procedure is the same as that for 10 MY OUTLANDER.

<Correct> A

<Vehicles for Europe> <Vehicles for Russia (Old)>
Install the shock absorber assembly so that the coil spring end faces the rear of the vehicle.

<Vehicles for Russia (New)>
The procedure is the same as that for 10 MY OUTLANDER.

INSTALLATION SERVICE POINT

<Old> >>A<< SHOCK ABSORBER ASSEMBLY INSTALLATION

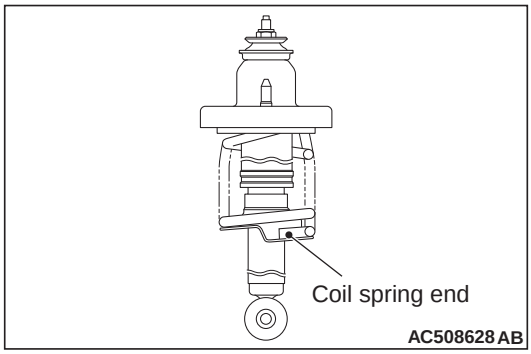

~~Install the shock absorber assembly so that the coil spring end faces the rear of the vehicle <LH>, or the coil spring end faces the front of the vehicle <RH>.~~

<New>

<Incorrect> A

~~**<Except vehicles for General Export (MMNA production)>**~~
- ~~Install the shock absorber assembly so that the coil spring end faces the rear of the vehicle <LH>, or the coil spring end faces the front of the vehicle <RH> .~~

~~**<Vehicles for General Export (MMNA production)>**~~
- ~~Install the shock absorber assembly so that the coil spring end faces the rear of the vehicle.~~

<Correct> A

<Except MMNA production> <MMNA production (Old)>
Install the shock absorber assembly so that the coil spring end faces the rear of the vehicle.

<MMNA production (New)>
The procedure is the same as that for 10 MY OUTLANDER.

INSTALLATION SERVICE POINT

<Old> >>A<< SHOCK ABSORBER ASSEMBLY INSTALLATION

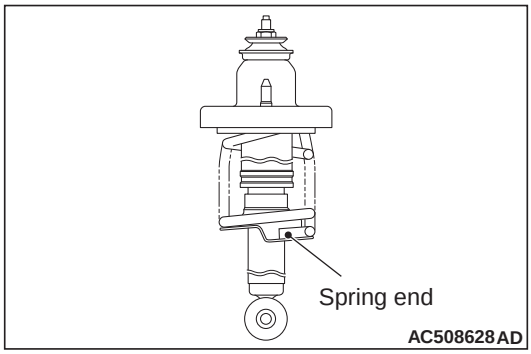

~~Install the shock absorber assembly so that the coil spring end faces the rear of the vehicle <LH>, or the coil spring end faces the front of the vehicle <RH>.~~

<New>

<Incorrect> A

~~Install the shock absorber assembly so that the coil spring end faces the rear of the vehicle.~~

<Correct> A

<Old>
Install the shock absorber assembly so that the coil spring end faces the rear of the vehicle.

<New>
Install the shock absorber assembly so that the coil spring end faces the rear of the vehicle <LH>, or the coil spring end faces the front of the vehicle <RH>.