SERVICE BULLETIN

MITSUBISHI MOTORS

GLOBAL AFTER SALES OFFICE, MITSUBISHI MOTORS CORPORATION

PURPOSE : CORRECTION	ISSUE NO. : MSB-14EXML42-501	DATE : 2014-01-22
SUBJECT : FRONT END CROSSMEMBER		<DESTINATION/MODEL> (MMNA/USTP/EUR/G.EXP/ GCC/MMAL/NZ/THAILAND) <M/Y> 13-14
GROUP : BODY(Gr:42)		MIRAGE/SPACE STAR/ATTRAGE/MIRAGE G4

1. Description :

Please refer to the attached document for the correction of the error in writing existing in the applicable service manual. (There are some errors in writing about the repair procedure for the front end cross member)

2. Affected service manuals :

For EUR

Applicable manual	Pub. No.	Applicable title (INFO ID)	Content
2013 MIRAGE/SPACE STAR Workshop Manual CD-ROM	CA0E13E1-CD CA0F13E1-CD CA0G13E1-CD CA0S13E1-CD CA0I13E1-CD	FRONT END CROSSMEMBER (M030-00-310-39000-01)	Attached sheet 2

For G.EXP/GCC/MMAL/NZ/THAILAND

Applicable manual	Pub. No.	Applicable title (INFO ID)	Content
2013 MIRAGE Workshop Manual CD-ROM	PWFE1201R MMAL:AU900305 NZ:DRAFT	FRONT END CROSSMEMBER (M030-00-310-39000-01)	Attached sheet 2

For MMNA/USTP

Applicable manual	Pub. No.	Applicable title (INFO ID)	Content
2014 MIRAGE Service Manual CD-ROM	MSCD-016B-2014	FRONT END CROSSMEMBER (M030-00-310-39000-01)	Attached sheet 3

3. About the details :

Please refer to the attached document (Attached sheet 2-3)

<Incorrect>

Attached sheet 2(1/2)

FRONT END CROSSMEMBER

M4030003100390

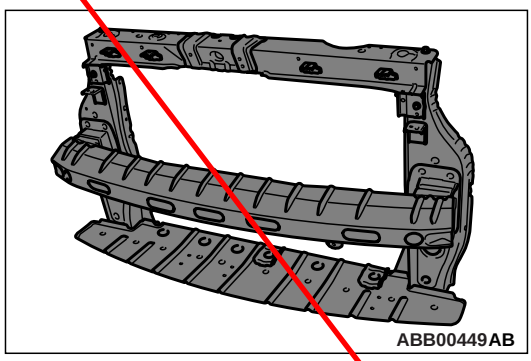

Symbol	Operation description
● ● ● ●	Spot welding
■ ■ ▲ ▲	MIG plug welding (■: indicates two panels to be welded ▲: indicates three panels to be welded)
+ + + +	MIG spot welding
|||||||||||	MIG arc welding (continuous)
ooooooooo	Braze welding
	Anti-corrosion agent application locations (Use access holes to apply liberally to butt-welded joints.)

REPAIR WELDS

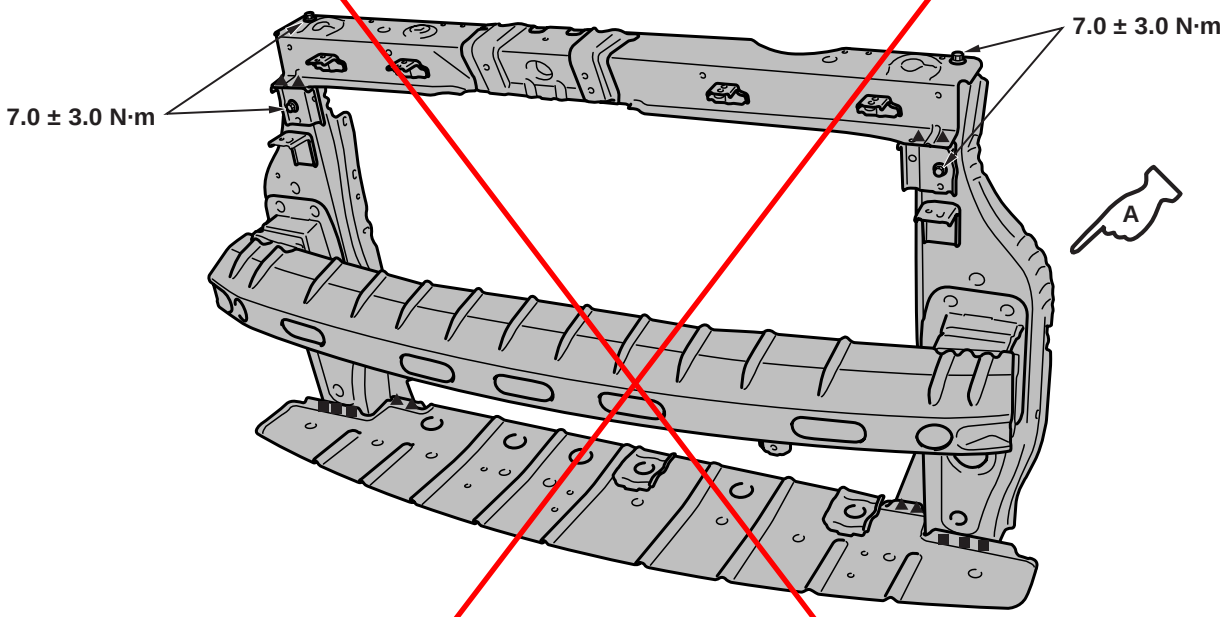

Insert the attached sheet 2(2/2)

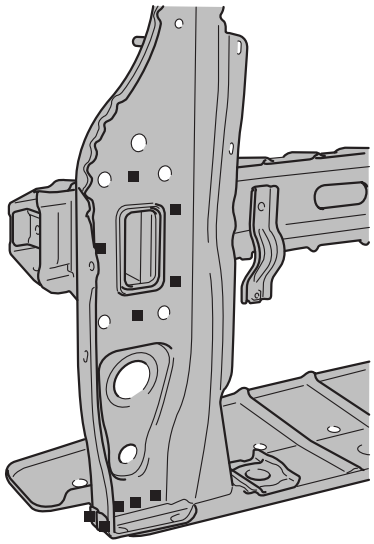

ABB00534AB

<Correct>

Attached sheet 2(2/2)

FRONT END CROSSMEMBER

M4030003100390

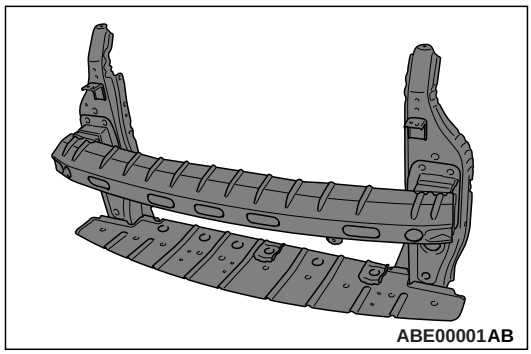
ABE00001AB

Symbol	Operation description
● ● ● ●	Spot welding
■ ■ ▲ ▲	MIG plug welding (■: indicates two panels to be welded ▲: indicates three panels to be welded)
+ + + +	MIG spot welding
|||||||||||	MIG arc welding (continuous)
∞∞∞∞∞∞∞∞	Braze welding
	Anti-corrosion agent application locations (Use access holes to apply liberally to butt-welded joints.)

REPAIR WELDS

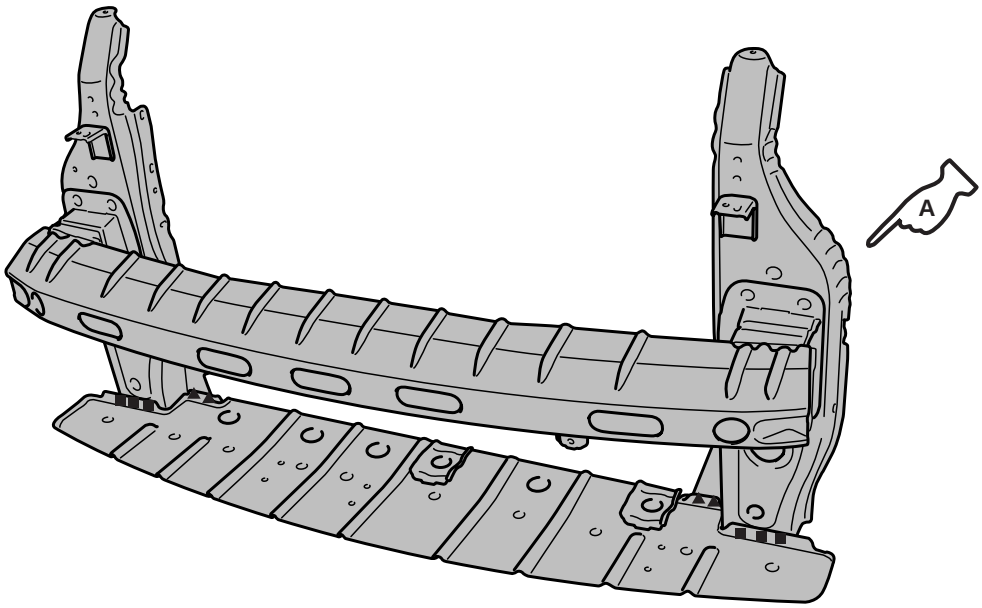

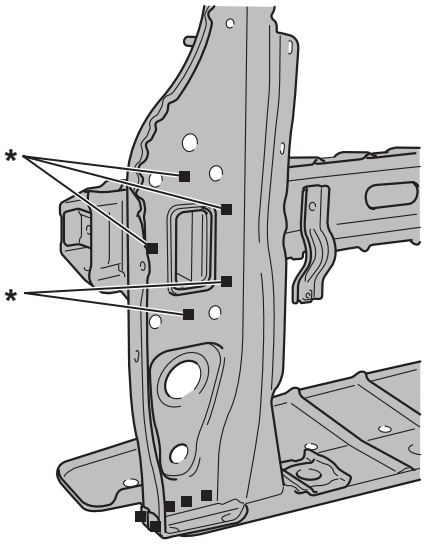

A

ABE00002AB

*NOTE: * : indicates the welding points of maker joint. (It is not necessary for repair)*

<Incorrect>

Attached sheet 3(1/2)

FRONT END CROSSMEMBER

M4030003100390

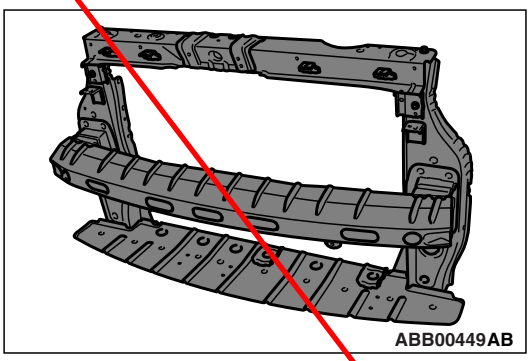

Symbol	Operation description
● ● ● ●	Spot welding
■ ■ ▲ ▲	MIG plug welding (■: indicates two panels to be welded ▲: indicates three panels to be welded)
+ + + +	MIG spot welding
⫴⫴⫴⫴⫴⫴⫴⫴⫴⫴	MIG arc welding (continuous)
∞∞∞∞∞∞∞∞	Braze welding
	Anti-corrosion agent application locations (Use access holes to apply liberally to butt-welded joints.)

REPAIR WELDS

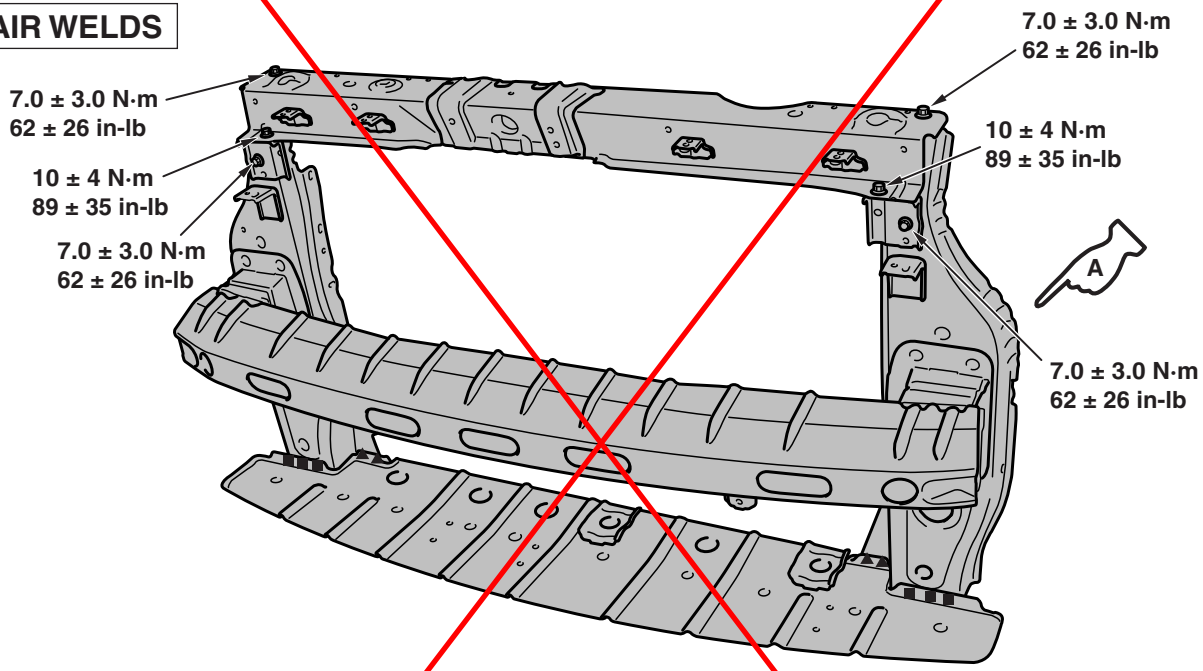

Insert the attached sheet 3(2/2)

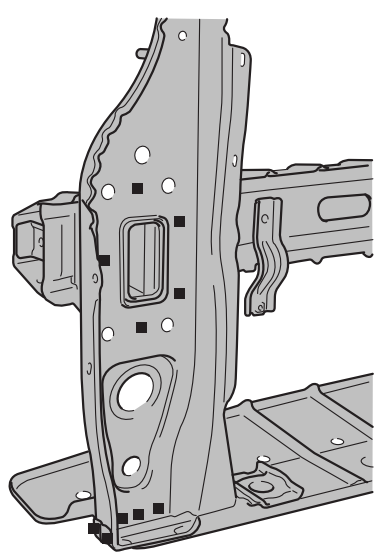

ABC00529AB

<Correct>

Attached sheet 3(2/2)

FRONT END CROSSMEMBER

M4030003100390

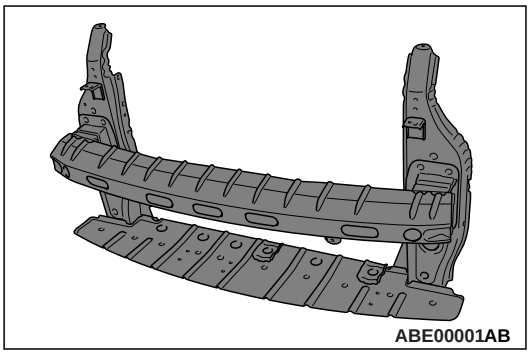

Symbol	Operation description
● ● ● ●	Spot welding
■ ■ ▲ ▲	MIG plug welding (■: indicates two panels to be welded ▲: indicates three panels to be welded)
+ + + +	MIG spot welding
╫╫╫╫╫╫╫╫╫╫	MIG arc welding (continuous)
∞∞∞∞∞∞∞∞	Braze welding
	Anti-corrosion agent application locations (Use access holes to apply liberally to butt-welded joints.)

REPAIR WELDS

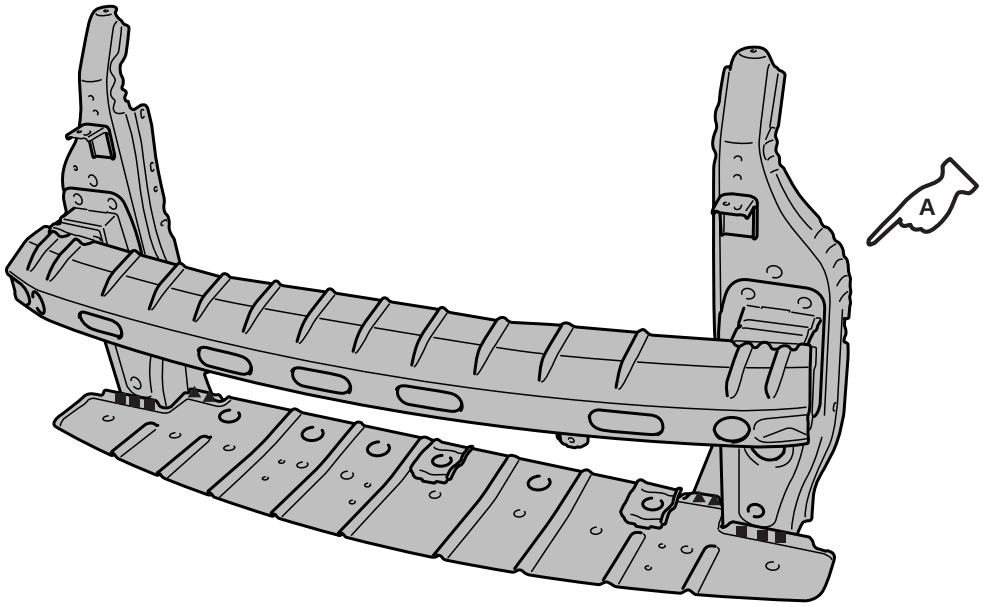

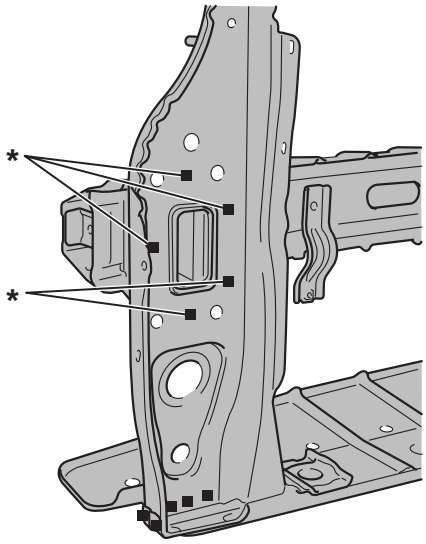

ABE00002AB

*NOTE: * : indicates the welding points of maker joint. (It is not necessary for repair)*