SERVICE BULLETIN

MITSUBISHI MOTORS

GLOBAL AFTER SALES OFFICE, MITSUBISHI MOTORS CORPORATION

PURPOSE : CHANGE	ISSUE NO. : MSB-15E37-001	DATE : 2015-10-01
SUBJECT : Change regarding the replacement of the heated steering wheel-ECU		<DESTINATION/MODEL> (EU) <M/Y> 16
GROUP : Gr:37(Steering)		OUTLANDER PHEV(GG0W)

1. Description :

Please refer to the attached document for the information about the change of mention in the applicable service manual.

2. Affected service manuals :

<EU>

Applicable manual	Pub No.	Applicable title (INFO ID))	Contents
2016 OUTLANDER/ OUTLANDER PHEV Workshop Manual	CGFE16E1-CD (ENG) CGFF16E1-CD (FRE) CGFG16E1-CD (GER) CGFS16E1-CD (SPA) CGFI16E1-CD (ITA)	Inspection Procedure 1: When the heated steering wheel switch is turned on, the heated steering wheel is not activated （M372-02-240-01300-01）	Attached sheet 5
		Inspection Procedure 3: The indicator for the heated steering wheel switch does not come on. （M372-02-270-01400-01）	Attached sheet 6
		Steering wheel removal and installation （M372-01-142-30500-01）	Attached sheet 7, 8

3. About the details :

Please refer to the attached document (Attached sheet 5-8)

Attached sheet 5

STEP 13. Retest the system

Q: Is the check result normal?

YES : Intermittent malfunction (Refer to GROUP 00 – How to Cope with Intermittent Malfunctions).

<Old>

~~**NO :** Replace the steering wheel.~~

<New>

NO : Replace the heated steering wheel-ECU. Then go to Step 14.

STEP 14. Retest the system

Q: Is the check result normal?

YES : This diagnosis is complete.

NO : Replace the steering wheel.

<Added>

Attached sheet 6

STEP 10. Retest the system

Q: Is the check result normal?

YES : Intermittent malfunction (Refer to GROUP 00 – How to Cope with Intermittent Malfunctions).

<Old>

~~**NO :** Replace the steering wheel.~~

<New>

NO : Replace the heated steering wheel-ECU. Then go to Step 11.

STEP 11. Retest the system

Q: Is the check result normal?

YES : This diagnosis is complete.

NO : Replace the steering wheel.

<Added>

<Old>

STEERING WHEEL

REMOVAL AND INSTALLATION

⚠ CAUTION

- **Before removing the steering wheel and driver's air bag module assembly (Refer to GROUP 52B – Service Precautions and Driver's Air Bag Module and Clock Spring).**
- **After the installation, perform a calibration for the ASC-ECU to learn the steering wheel sensor neutral point. (Refer to GROUP 35C – On-vehicle Service, Steering Wheel Sensor Calibration).**

Pre-removal Operation	Post-installation Operation
Steering Wheel Straight-ahead Position Check	• Steering Wheel Straight-ahead Position Check • Steering Wheel Shake Check

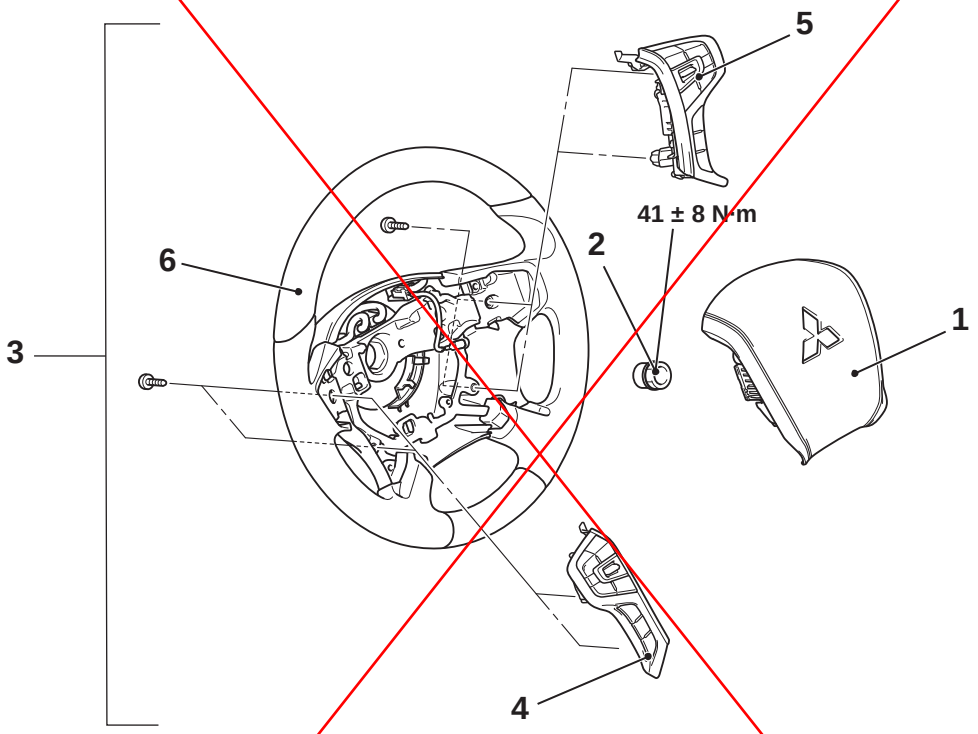

ACF00033AB

Removal steps

>>A<< 1. Driver's air bag module (GROUP 52B – Driver's Air Bag Module and Clock Spring)
2. Steering wheel nut
<<A>> >>A<< 3. Steering wheel assembly
4. Steering wheel remote control switch
5. Cruise control switch
6. Steering wheel

REMOVAL SERVICE POINT

<<A>> STEERING WHEEL ASSEMBLY REMOVAL

1. Position the steering wheel in a straight ahead position.

⚠ CAUTION

Use the special tool to remove the steering wheel since the steering column collision adsorbing mechanism may be damaged.

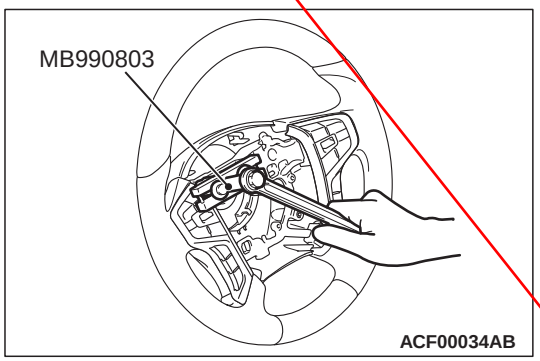

ACF00034AB

2. Use special tool steering wheel puller (MB990803) to remove the steering wheel.

<New>

Insert the attached sheet 8

<Old>

INSTALLATION SERVICE POINT

>>A<< STEERING WHEEL ASSEMBLY/DRIVER'S AIR BAG MODULE INSTALLATION

⚠ CAUTION

When installing the steering wheel assembly and air bag module, do not trap the clock spring harness.

1. After centring the clock spring (Refer to GROUP 52B – Driver's Air Bag Module and Clock Spring)

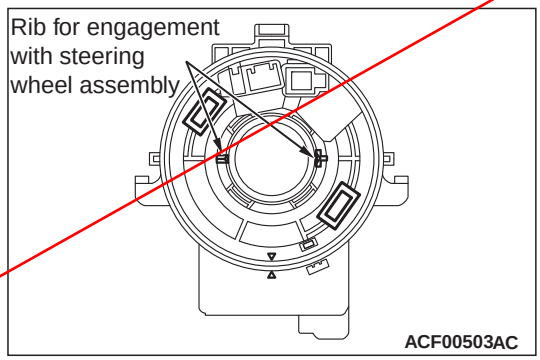

2. After checking that the clock spring centre alignment is already performed, install the steering wheel assembly so that its boss part is aligned with the rib of the clock spring slowly.
3. Install the driver's air bag module.
4. After the installation, check that there is no abnormality when the steering wheel is fully turned to left and right.

<New>

Insert the attached sheet 8

<New>

STEERING WHEEL

REMOVAL AND INSTALLATION

⚠ CAUTION

- **Before removing the steering wheel and driver's air bag module assembly (Refer to GROUP 52B – Service Precautions and Driver's Air Bag Module and Clock Spring).**
- **After the installation, perform a calibration for the ASC-ECU to learn the steering wheel sensor neutral point. (Refer to GROUP 35C – On-vehicle Service, Steering Wheel Sensor Calibration).**

Pre-removal Operation	Post-installation Operation
Steering Wheel Straight-ahead Position Check	• Steering Wheel Straight-ahead Position Check • Steering Wheel Shake Check

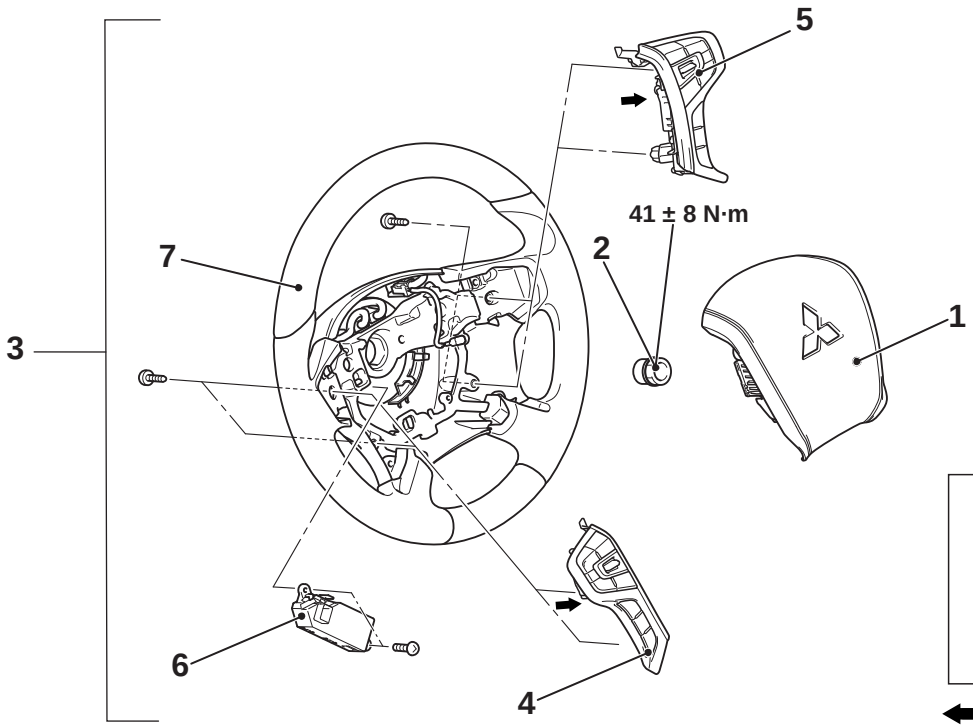

ACF04162AB

Removal steps

	>>C<<	1. Driver's air bag module (GROUP 52B – Driver's Air Bag Module and Clock Spring)
		2. Steering wheel nut
<<A>>	>>C<<	3. Steering wheel assembly
<<B>>		4. Steering wheel remote control switch
<<B>>		5. Cruise control switch
	>>B<<	● Steering wheel remote control switch wiring harness
	>>B<<	● Heated steering wheel ECU wiring harness
<<C>>	>>A<<	6. Heated steering wheel ECU

Removal steps (Continued)

<<D>>	>>A<<	● Heater element connector connection
		7. Steering wheel

REMOVAL SERVICE POINTS

<<A>> STEERING WHEEL ASSEMBLY REMOVAL

1. Position the steering wheel in a straight ahead position.

<New>

⚠ CAUTION
Use the special tool to remove the steering wheel since the steering column collision adsorbing mechanism may be damaged.

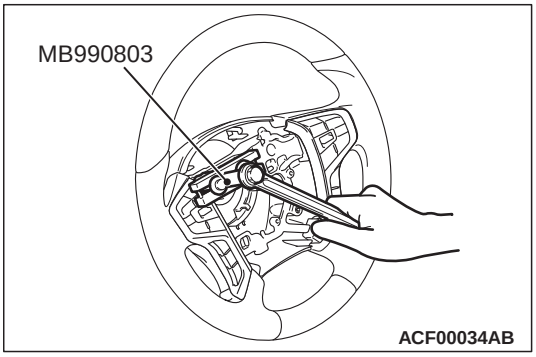

2. Use special tool steering wheel puller (MB990803) to remove the steering wheel.

<<B>> STEERING WHEEL REMOTE CONTROL SWITCH/CRUISE CONTROL SWITCH

⚠ CAUTION
To remove the steering wheel remote control switch or cruise control switch, remove the left or right side only.If fail to observe this, the steering lower cover will fall down, thus damaging it.

<<C>> HEATED STEERING WHEEL ECU REMOVAL

⚠ CAUTION
Remove only the left side of steering wheel remote control switch.If fail to observe this, the steering lower cover will fall down, thus damaging it.
Loosen the tapping screws behind the steering wheel, and then slide the steering wheel lower cover away from the steering wheel to allow sufficient clearance to remove the ECU mounting screws.

<<D>> HEATER ELEMENT CONNECTOR CONNECTION REMOVAL

⚠ CAUTION
- **To remove the heated steering wheel ECU, disconnect the heater element connector carefully to avoid damage to the heater element.**
- **Do not remove the lower cover completely as the heater element is adhered to the lower cover by using an adheseive tape.Also be careful not to peel off the adhesive tape.**

INSTALLATION SERVICE POINT

>>A<< HEATER ELEMENT CONNECTOR CONNECTION INSTALLATION

⚠ CAUTION
To installing the heated steering wheel ECU, reconnect the heater element connector carefully to avoid damage to the heater element.

>>B<< HEATED STEERING WHEEL ECU WIRING HARNESS/STEERING WHEEL REMOTE CONTROL SWITCH WIRING HARNESS/CRUISE CONTROL SWITCH WIRING HARNESS INSTALLATION

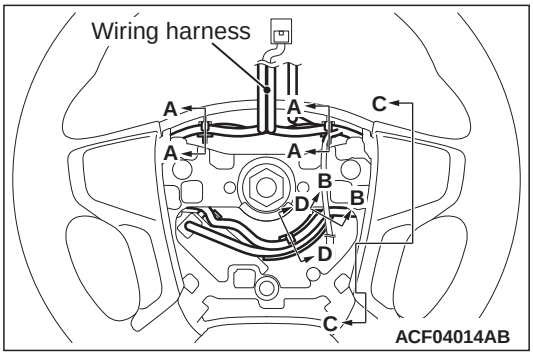

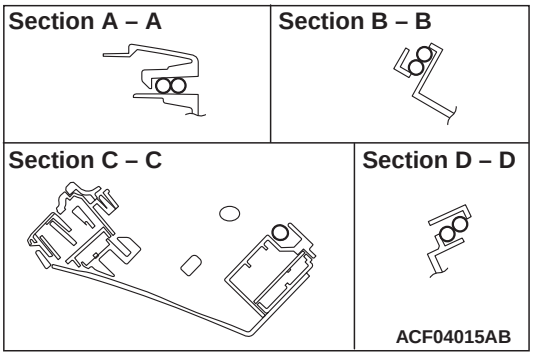

Route the heated steering wheel ECU wiring harness, the steering wheel remote control switch and the cruise control switch wiring harness as shown.

>>C<< STEERING WHEEL ASSEMBLY/DRIVER'S AIR BAG MODULE INSTALLATION

⚠ CAUTION
When installing the steering wheel assembly and air bag module, do not trap the clock spring harness.

1. After centring the clock spring (Refer to 52B – Driver's air bag module and clock spring).

<New>

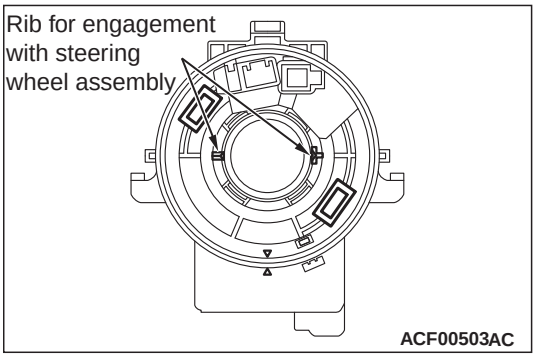

2. After checking that the clock spring centre alignment is already performed, install the steering wheel assembly so that its boss part is aligned with the rib of the clock spring slowly.
3. Install the driver's airbag module.
4. After the installation, check that there is no abnormality when the steering wheel is fully turned to left and right.