SERVICE BULLETIN

MITSUBISHI MOTORS

GLOBAL AFTER SALES OFFICE, MITSUBISHI MOTORS CORPORATION

PURPOSE : INFORMATION	ISSUE NO. : MSB-15E42-003	DATE : 2015-04-24
SUBJECT : INFORMATION ON 2016 OUTLANDER/OUTLANDER PHEV BODY REPAIR MANUAL		<DESTINATION/MODEL> (EUR/RUSSIA) <M/Y> 16
GROUP : Gr:42(Body)		OUTLANDER(GF0W)/ OUTLANDER PHEV(GG0W)

1. Description :

This Service Bulletin contains the information about the 2016 OUTLANDER / OUTLANDER PHEV Body Repair Manual. The related groups are Gr:01, Gr:03, Gr:05 and GR:06.

Gr:01 : Changes of the components in the front body, the side body and the under body.
Additions of the stiffener and the damp sheet
Gr:03 : Changes of the repair procedure of the front pillar
Gr:05 : Changes of the components in the front bumper
Additions of the door garnish
Gr:06 : Changes of the body colours
Additions of the painting in different colours

2. Affected service manuals :

Applicable manual	Pub. No.	Contents
2014 OUTLANDER Service Manual	MSB-13EX00-001	attached sheet

3. About the details :

Please refer to the attached document

4. Effective time : From 16MY Outlander and Outlander PHEV.

GROUP 1

BODY CONSTRUCTION

CONTENTS

GENERAL INFORMATION 1-2

BODY CONSTRUCTION CHARACTERISTICS 1-2

FRONT BODY. 1-2

SIDE BODY 1-4

UNDER BODY. 1-4

STIFFENER AND DAMP SHEET APPLICATION LOCATIONS 1-5

GENERAL INFORMATION

M4010000200910

OUTLINE OF CHANGE

The sections "FRONT BODY", "SIDE BODY", "UNDER BODY" and "STIFFENER AND DAMP SHEET APPLICATION LOCATIONS" have been changed.

BODY CONSTRUCTION CHARACTERISTICS

FRONT BODY

M4010010001880

FENDER SHIELD

A spring house corner gusset front has been added to improve the rigidity of the vehicle body.

<Right side>

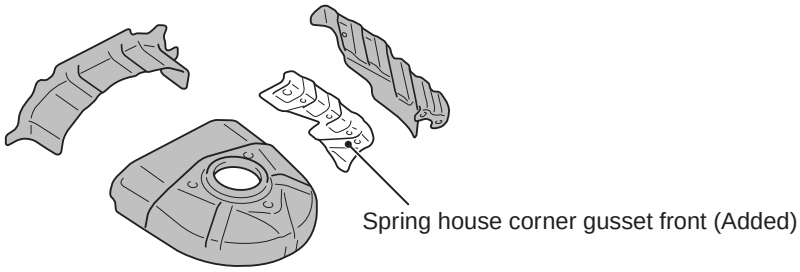

NOTE :
: Indicate the same parts as for previous models.

ABE00578AB

<Left side>

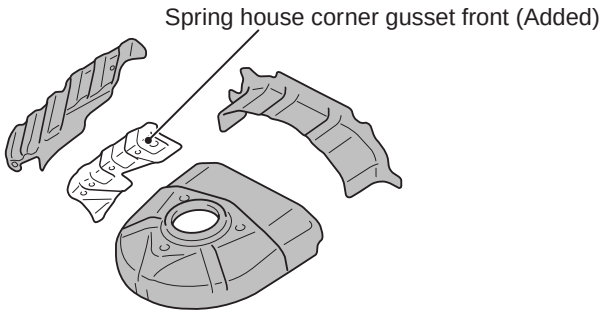

NOTE :
: Indicate the same parts as for previous models.

ABE00579AB

FRONT SIDEMEMBER REINFORCEMENT

The following component has been added.

<Left side>

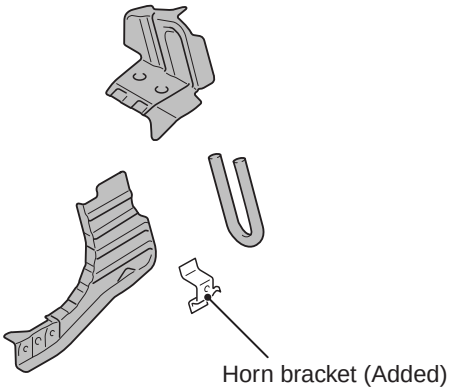

NOTE :
: Indicate the same parts as for previous models.

ABE00580AB

FRONT DECK

The following components have been added to improve the rigidity of the front deck.

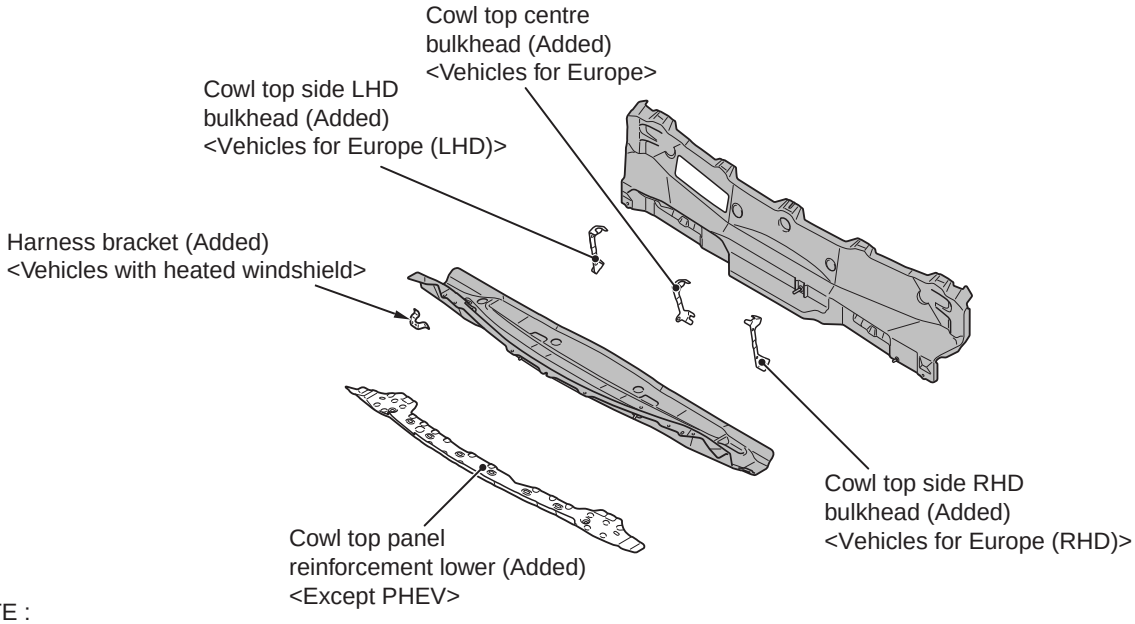

NOTE :
: Indicate the same parts as for previous models.

ABF00113AB

SIDE BODY

M4010011001805

SIDE STRUCTURE

An upper frame-to-front pillar brace and an upper frame brace extension have been added to improve the rigidity of the vehicle body.

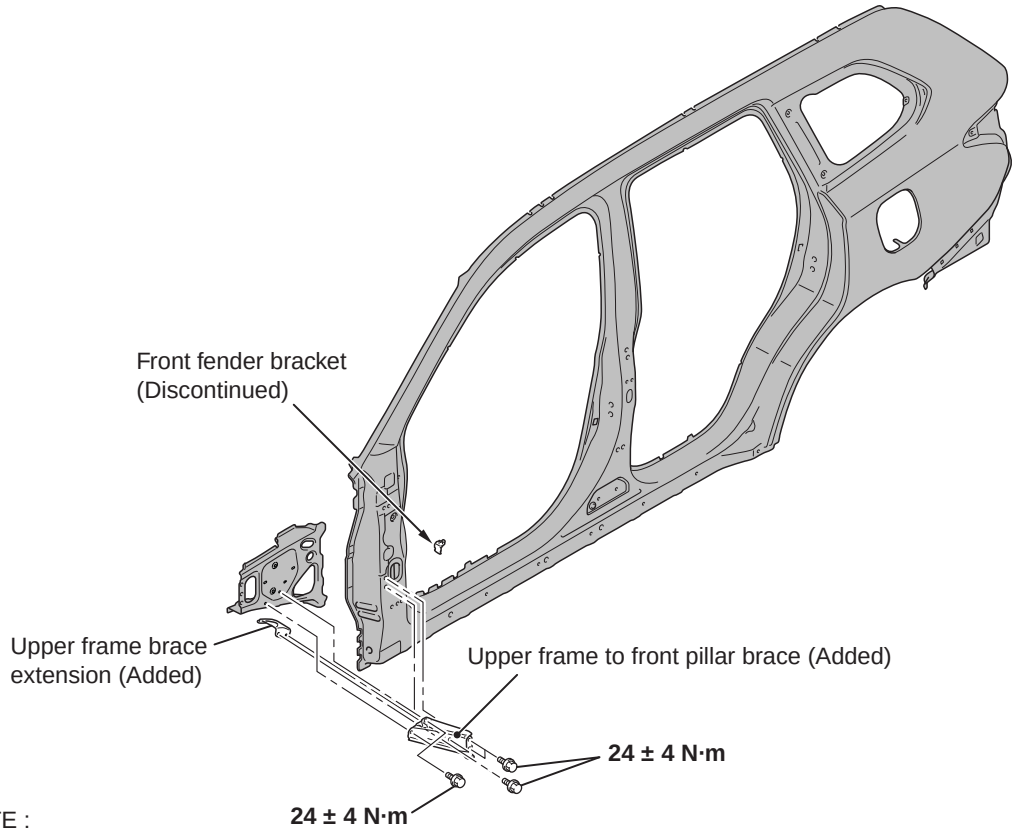

NOTE :
: Indicate the same parts as for previous models.

ABE00586AB

UNDER BODY

M4010014001826

FRONT FLOOR <PHEV>

The following component has been changed.

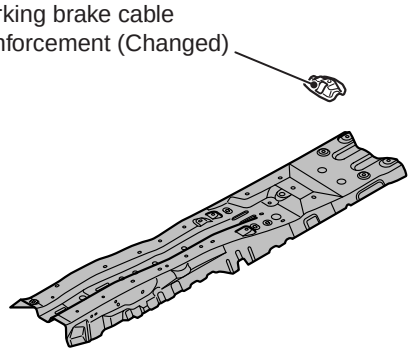

NOTE :
: Indicate the same parts as for previous models.

ABF00114AB

STIFFENER AND DAMP SHEET APPLICATION LOCATIONS

M4010001400553

Stiffeners and damping sheets have been added to improve sound insulation performance.

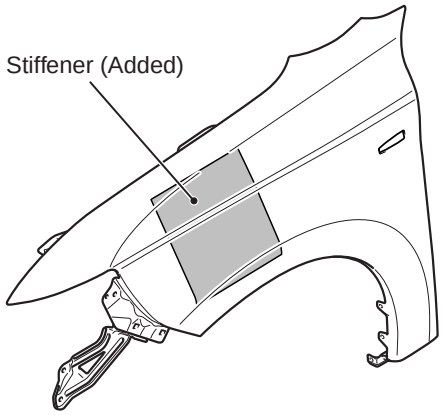

ABE00612AB

<Right side>

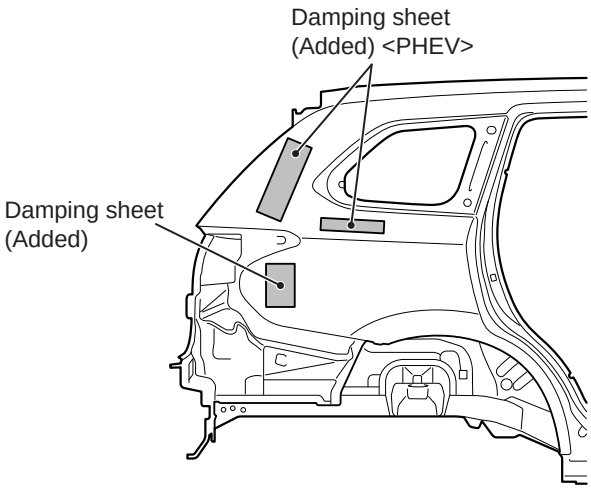

<Left side>

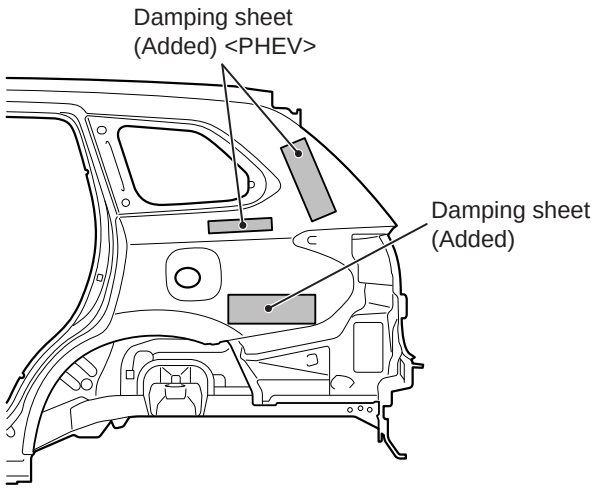

ABF00119AB

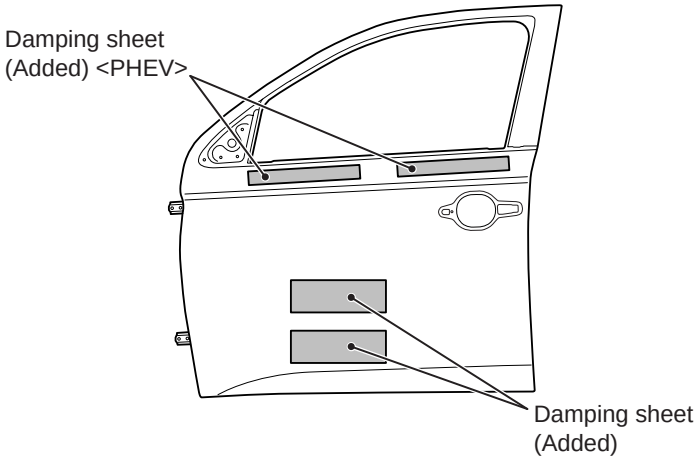

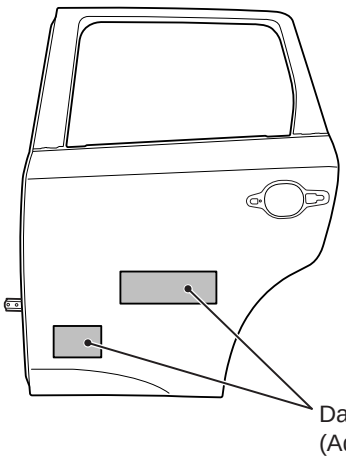

ABF00115AB

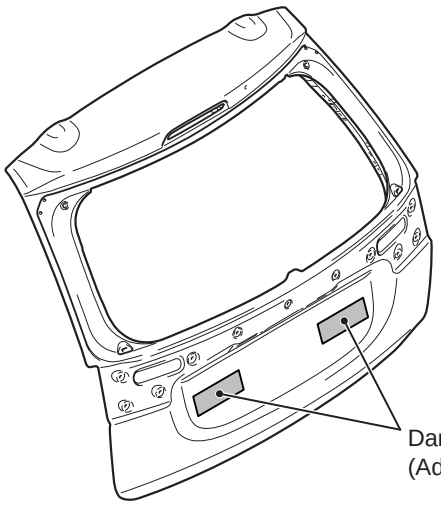

ABE00583AB

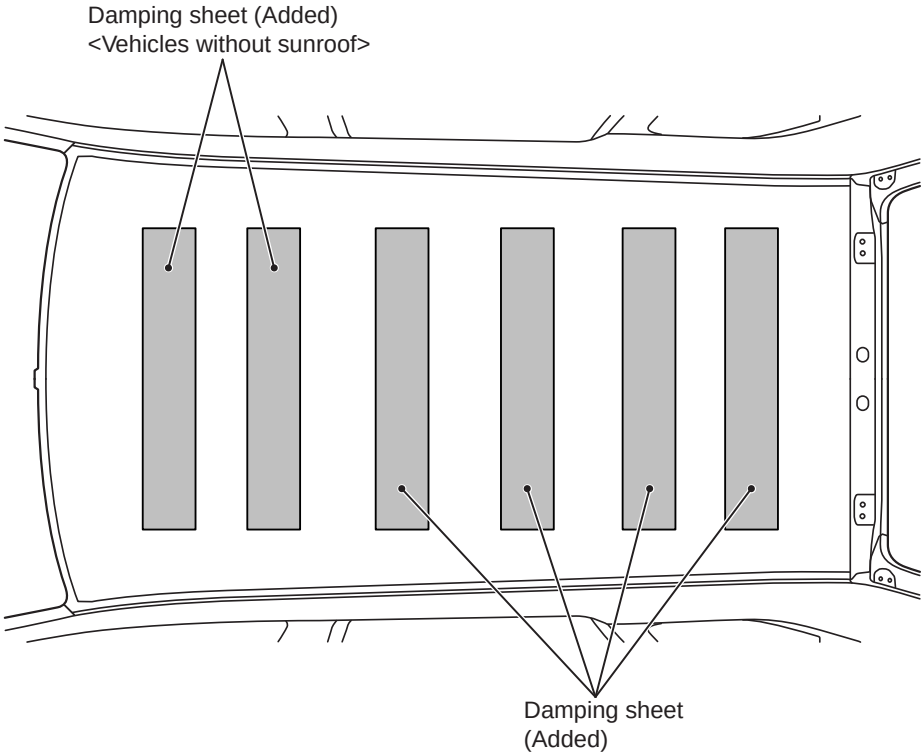

ABE00604AB

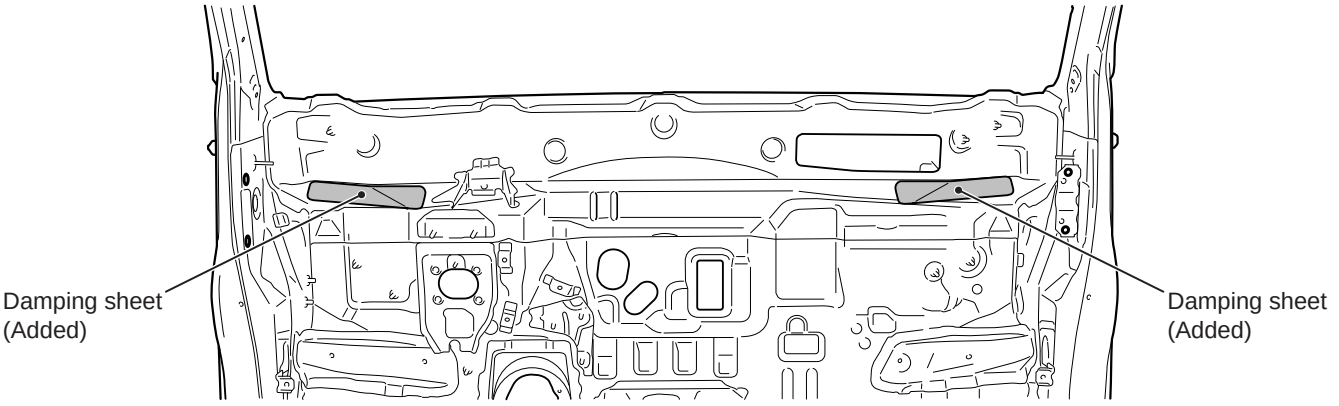

ABE00577AB

NOTES

GROUP 3

WELDED PANEL REPLACEMENT

CONTENTS

GENERAL INFORMATION 3-2
FRONT PILLAR 3-2

GENERAL INFORMATION

M4030000900494

OUTLINE OF CHANGE

The section "FRONT PILLAR" has been changed.

FRONT PILLAR

M4030005002210

Due to the addition of upper frame to front pillar brace, the repair procedures have been changed. The other service procedures are the same as before.

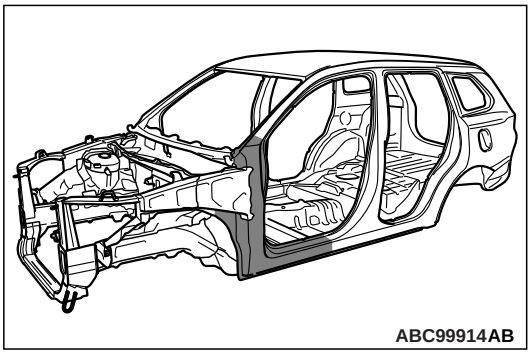
ABC99914AB

Symbol	Operation description
● ● ● ●	Spot welding
■ ■ ▲ ▲	MIG plug welding (■: indicates two panels to be welded ▲: indicates three panels to be welded)
+ + + +	MIG spot welding
⫴⫴⫴⫴⫴⫴⫴⫴⫴⫴	MIG arc welding (continuous)
∞∞∞∞∞∞∞∞	Braze welding
	Anti-corrosion agent application locations (Use access holes to apply liberally to butt-welded joints.)

REPAIR WELDS

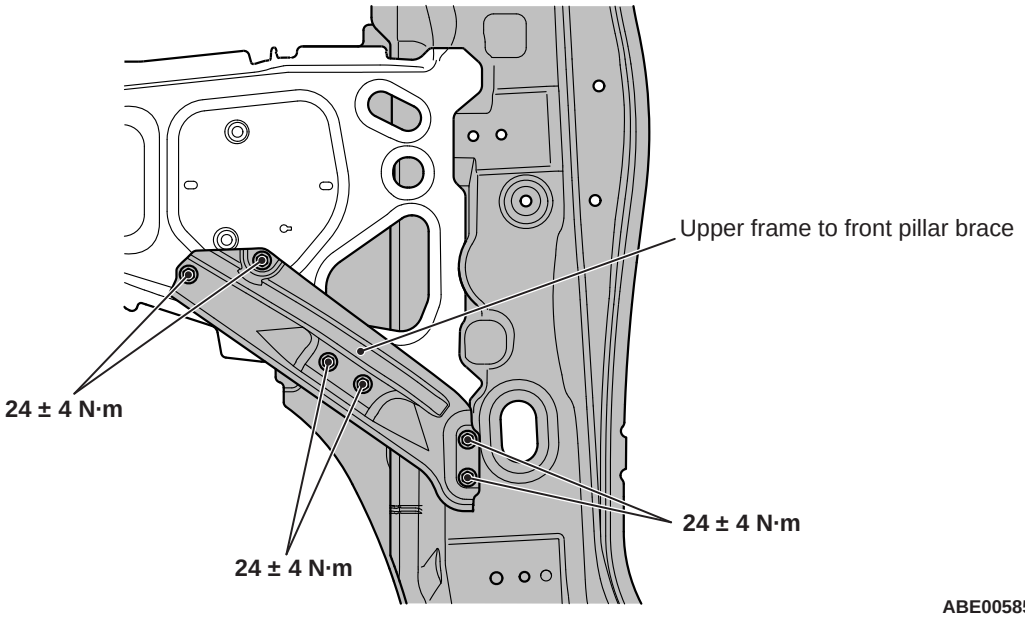

ABE00585AB

NOTE ON REPAIR WORK

INSTALLATION

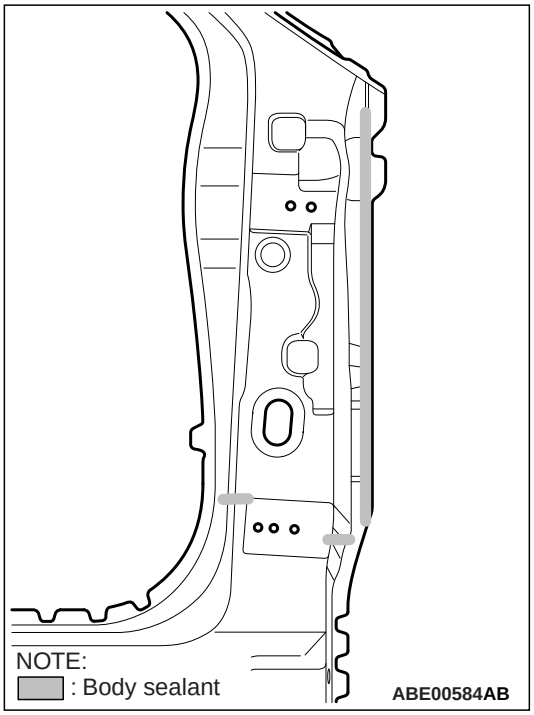

Prior to assembling the new front outer pillar parts, apply the body sealant to the area shown in the figure.

NOTES

GROUP 5

SYNTHETIC-RESIN PARTS

CONTENTS

LOCATION OF SYNTHETIC-RESIN PARTS 5-2

LOCATION OF SYNTHETIC-RESIN PARTS

M4050001002298

Indicates the main usage locations that have been changed or added.

<Except PHEV>

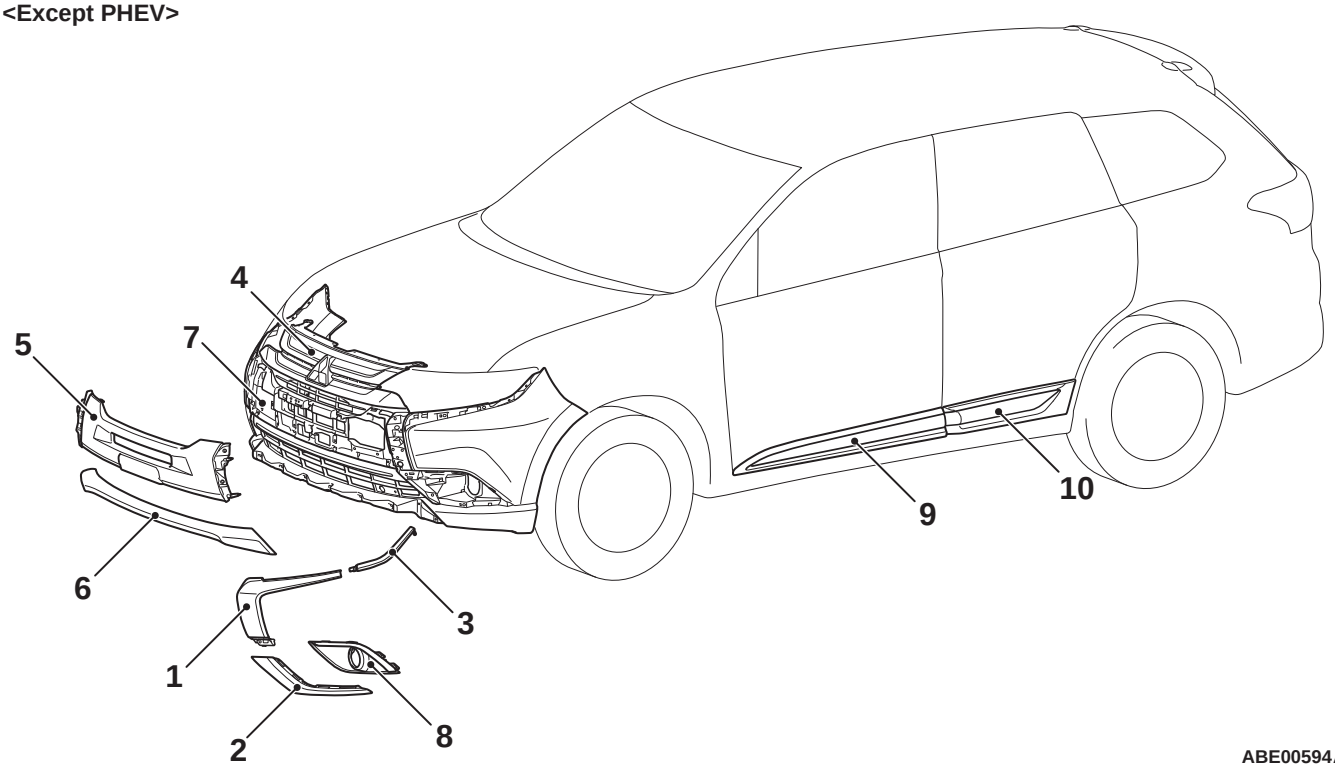

ABE00594AC

<PHEV>

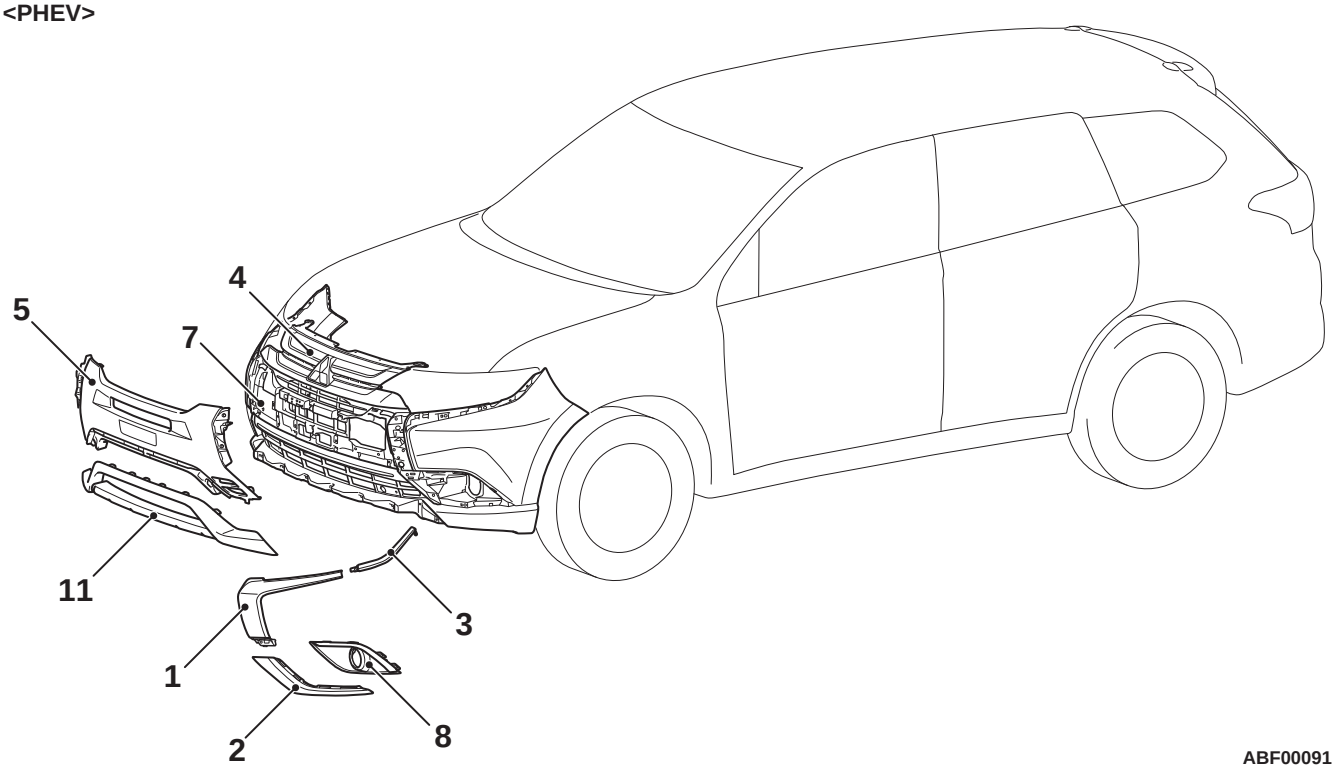

ABF00091AB

No.	Part Name	Name Of Resin	Abbreviation	Heat-resistant Temp [°C]
1	Front bumper side centre garnish	Acrylonitrile butadiene styrene	ABS	80
2	Front bumper side lower garnish			
3	Front bumper side upper garnish			
4	Radiator grille			
5	Front bumper centre cover	Rubber modified polypropylene	PP+E/P	80
6	Front bumper extension			
7	Front bumper face			
8	Front fog lamp bezel			
9	Front door garnish			
10	Rear door garnish			
11	Front bumper extension	Talc filled rubber modified polypropylene (10%)	PP+E/P-TD10	80

NOTE:

- *A slash (/) in the material symbol indicates that two different materials make two-layer construction. A plus sign (+) indicates that the two different materials mix each other.*
- *The material symbols for synthetic-resin parts are embossed on the parts in hidden places.*

NOTES

GROUP 6

BODY COLOUR

CONTENTS

GENERAL INFORMATION 6-2

BODY COLOUR CHARTS <EXCEPT PHEV> 6-2

BODY COLOUR CHARTS <PHEV>. 6-3

BODY COLOURING 6-4

FRONT BUMPER 6-4

REAR BUMPER 6-4

GENERAL INFORMATION

M4060000201338

OUTLINE OF CHANGE

- The section "BODY COLOUR CHARTS" has been changed.
- The section body colouring of "FRONT BUMPER" and "REAR BUMPER" have been changed.

BODY COLOUR CHARTS <EXCEPT PHEV>

M4060002004599

Check the vehicle's body colour code, and then use this body colour chart to determine the refinishing paint supplier from which the colour can be purchased.

Colour	Colour code	Colour number	Colour name	Coating film structure	Composition of film
SILVER	A31	CMA10031	Cool Silver Metallic	2M	Metallic
GREYISH BROWN	C06	CMC10006	Quartz Brown Metallic	2M	Metallic
DARK BLUE	D14	CMD10014	Cosmic Blue Mica	2P	Interferenced Pearl
RED	P26	CMP10026	Red Metallic	2M	Metallic
GREY	U17	CMU10017	Titanium Grey Metallic	2M	Metallic
BLUISH SILVER	U21	CMU10021	Technical Silver Metallic	2M	Metallic
WHITE	W13	CMW10013	White Pearl	3P	Pearl
WHITE	W37	CMW10037	White Solid	2S	Solid
BLACK	X42	AC11342	Black Mica	2P	Interferenced Pearl

NOTE:

- *The coating film structure indicates top coating only (2S: 2 coat solid, 2M: 2 coat metallic, 2P: 2 coat pearl, 3P: 3 coat pearl).*
- *For painting, inner panel colours should be similar to the outer panel colours.*
- *The roof rail is coated in black (AC10657) or silver (AC11169).*

BODY COLOUR CHARTS <PHEV>

M4060002004607

Check the vehicle's body colour code, and then use this body colour chart to determine the refinishing paint supplier from which the colour can be purchased.

Colour	Colour code	Colour number	Colour name	Coating film structure	Composition of film
GREYISH BROWN	C06	CMC10006	Quartz Brown Metallic	2M	Metallic
RED	P26	CMP10026	Red Metallic	2M	Metallic
GREY	U17	CMU10017	Titanium Grey Metallic	2M	Metallic
BLUISH SILVER	U21	CMU10021	Technical Silver Metallic	2M	Metallic
WHITE	W13	CMW10013	White Pearl	3P	Pearl
WHITE	W37	CMW10037	White Solid	2S	Solid
BLACK	X40	CMX10040	Ruby Black Pearl	2P	Metallic
BLACK	X42	AC11342	Black Mica	2P	Interferenced Pearl

NOTE:

- *The coating film structure indicates top coating only (2S: 2 coat solid, 2M: 2 coat metallic, 2P: 2 coat pearl, 3P: 3 coat pearl).*
- *For painting, inner panel colours should be similar to the outer panel colours.*
- *The roof rail is coated in silver (AC11169).*
- *The lower part of the front bumper extension is painted in silver (AC11169).*

BODY COLOURING

FRONT BUMPER

M4060000500455

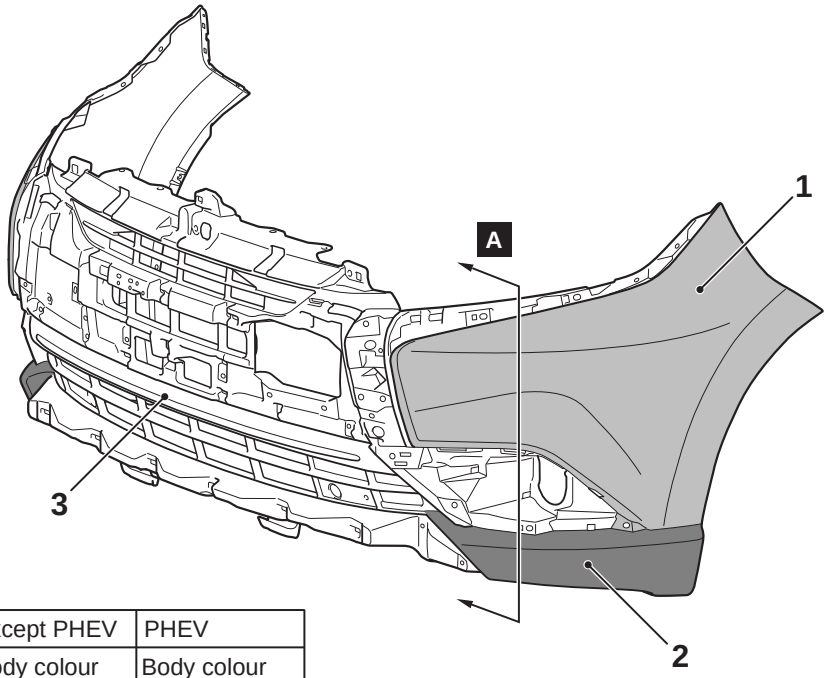

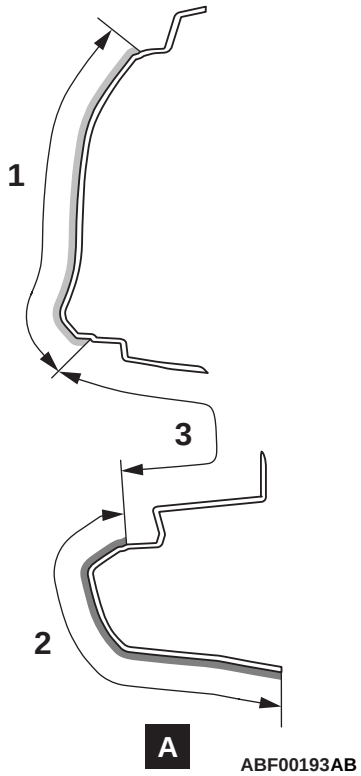

ABF00193AB

	Except PHEV	PHEV
1	Body colour	Body colour
2	Material colour	Body colour
3	Material colour	Material colour

REAR BUMPER

M4060000300332

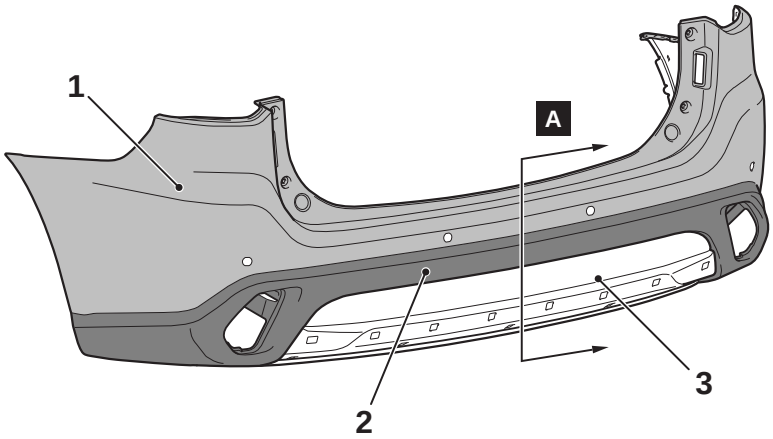

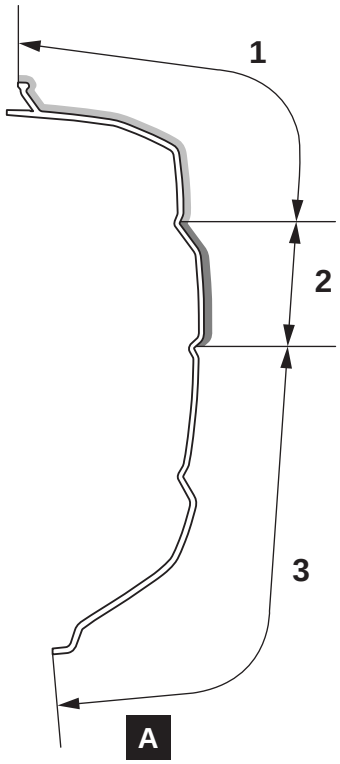

ABF00194AB

	Except PHEV	PHEV
1	Body colour	Body colour
2	Material colour	Body colour
3	Material colour	Material colour