SERVICE BULLETIN

MITSUBISHI MOTORS

GLOBAL AFTER SALES OFFICE, MITSUBISHI MOTORS CORPORATION

PURPOSE : INFORMATION	ISSUE NO. : MSB-15E42-006	DATE : 2015-10-06
SUBJECT : Information on 2016MY Mirage/Space Star for EU Body Repair Manual		<DESTINATION/MODEL> (EU) Mirage/Space Star(A00A) <M/Y> 16
GROUP : Gr:42(Body)		

1. Description :

This Service Bulletin contains the information about the 2016MY Mirage/Space Star Body Repair Manual. The groups to be changed are as follows.

1)Gr:01 : Changes of the components parts of the rear floor side member.
Addition of the stiffener in the hood outer panel.
2)Gr:03 : Changes of the repair procedures for the rear end panel and the rear floor.
3)Gr:06 : Changes of the body colors

2. Affected service manuals :

Applicable manual	Pub. No.
2013 MIRAGE/SPACE STAR Workshop Manual (Body Repair Manual)	CA0E13E1-CD (ENG) CA0F13E1-CD (FRE) CA0G13E1-CD (GER) CA0S13E1-CD (SPA) CA0I13E1-CD (ITA)

3. About the details :

Please refer to the attached document (Attached sheet)

4. Effective time : From the vehicles of 16MY

GROUP 1

BODY CONSTRUCTION

CONTENTS

GENERAL INFORMATION 1-2

BODY CONSTRUCTION CHARACTERISTICS 1-2

UNDER BODY 1-2

STIFFENER APPLICATION LOCATIONS 1-3

GENERAL INFORMATION

M4010000200943

OUTLINE OF CHANGE

- The section "UNDER BODY" below has been changed.
- The section "STIFFENER APPLICATION LOCATIONS" below has been added.

BODY CONSTRUCTION CHARACTERISTICS

UNDER BODY

M4010014001860

REAR FLOOR SIDEMEMBER REINFORCEMENT

The rear floor sidemember reinforcement (right side) and the rear floor sidemember extension (left and right side) has been reshaped. The rear floor sidemember reinforcement (right side) and the rear floor sidemember reinforcement rear (left and right side) have been added.

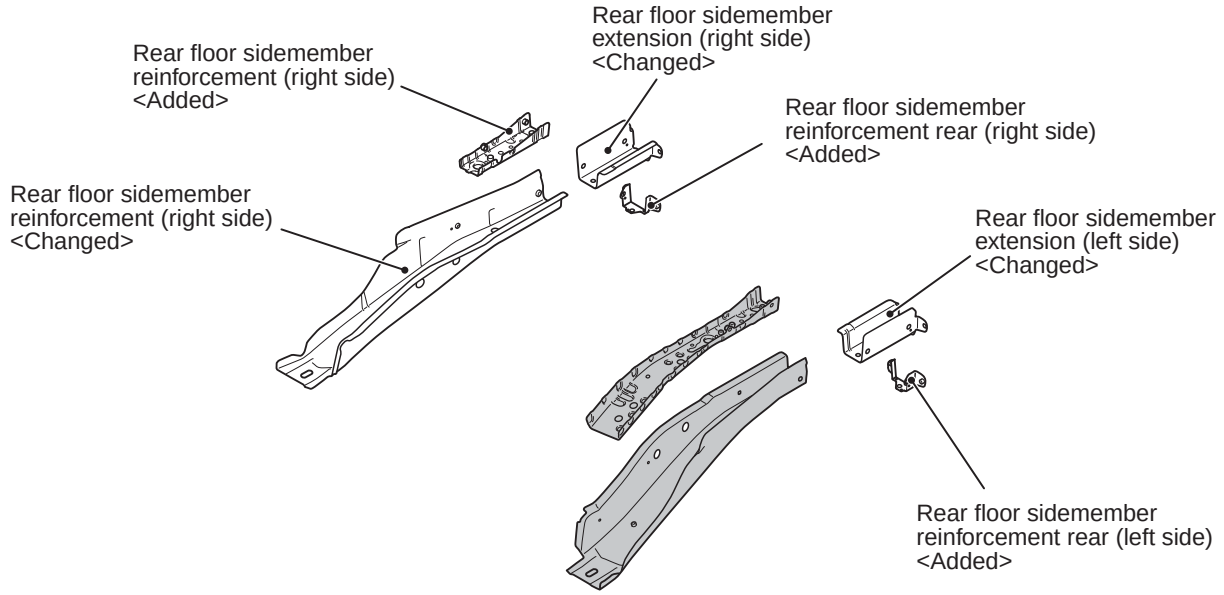

NOTE: ▭: Indicate same parts as for previous models.

ABF00396 AB

STIFFENER APPLICATION LOCATIONS

M4010001700112

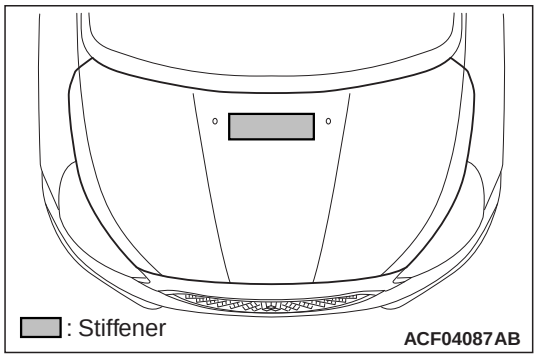

To increase the surface rigidity, the stiffener has been attached to the hood outer panel.

NOTE:

- *The main contents of a stiffener are epoxy resin. It comes in a sheet form and contains a mixture of glass fibre and filler, and cures (stiffens) when heated.*
- *No spare part of the stiffener for repair is available in the field. If the stiffener is damaged, replace it together with the panel.*

NOTES

GROUP 3

WELDED PANEL REPLACEMENT

CONTENTS

GENERAL INFORMATION 3-2
REAR END PANEL 3-2
REAR FLOOR. 3-4

GENERAL INFORMATION

M4030000900535

OUTLINE OF CHANGE

The repair procedure for the rear end panel and the rear floor has been revised as the components of the rear floor side member have been changed.

REAR END PANEL

M4030000300210

As the rear floor side member has been changed, the welding points (6 points on the left and right sides) between the rear end panel inner and rear floor side member have been changed. The other service procedures are the same as before.

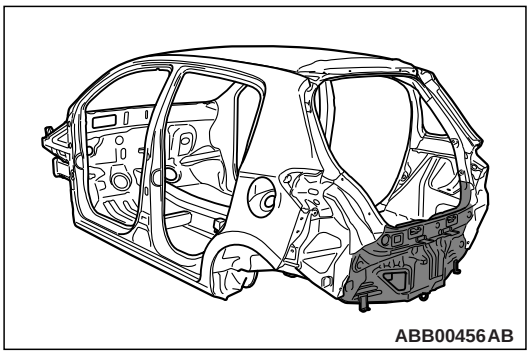

Symbol	Operation description
● ● ● ●	Spot welding
■ ■ ▲ ▲	MIG plug welding (■: indicates two panels to be welded ▲: indicates three panels to be welded)
＋＋＋＋	MIG spot welding
|||||||||||	MIG arc welding (continuous)
ooooooooo	Braze welding
	Anti-corrosion agent application locations (Use access holes to apply liberally to butt-welded joints.)

REPAIR WELDS

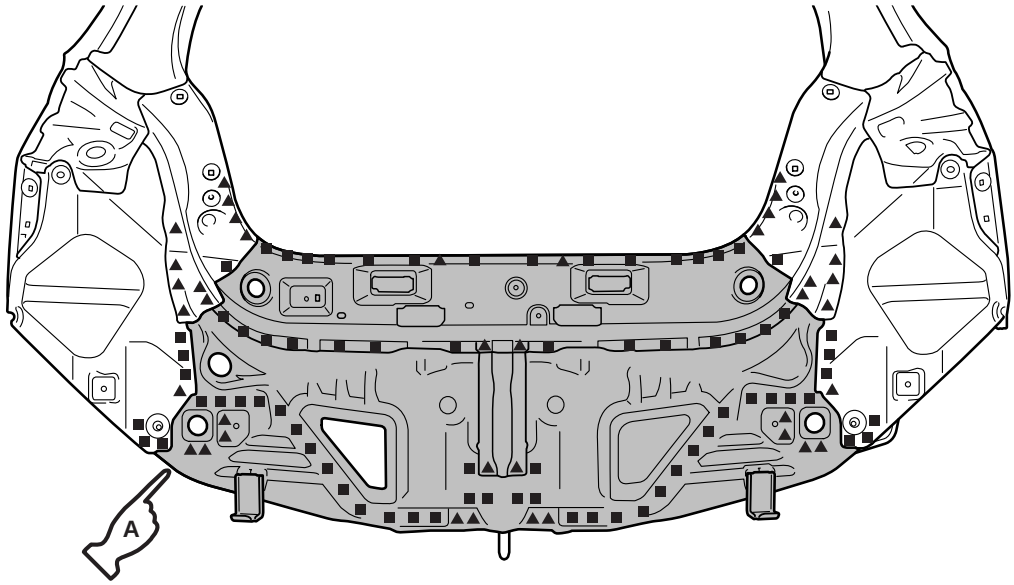

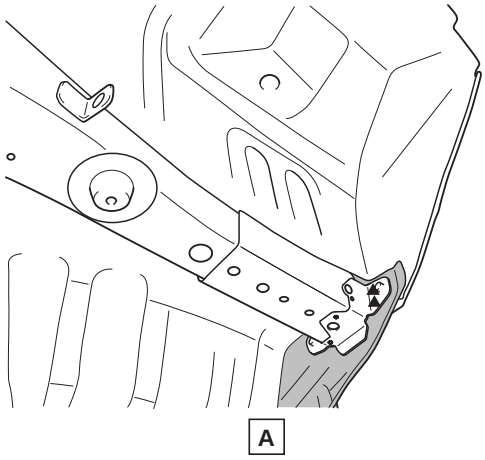

ABF00397AB

REAR FLOOR

M4030010001536

As the components of the rear floor side member have been changed, the welding points have been changed. The other service procedures are the same as before.

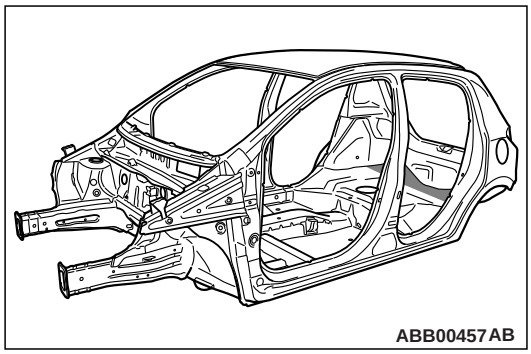

Symbol	Operation description
● ● ● ●	Spot welding
■ ■ ▲ ▲	MIG plug welding (■: indicates two panels to be welded ▲: indicates three panels to be welded)
+ + + +	MIG spot welding
┼┼┼┼┼┼┼┼┼┼	MIG arc welding (continuous)
∞∞∞∞∞∞∞	Braze welding
	Anti-corrosion agent application locations (Use access holes to apply liberally to butt-welded joints.)

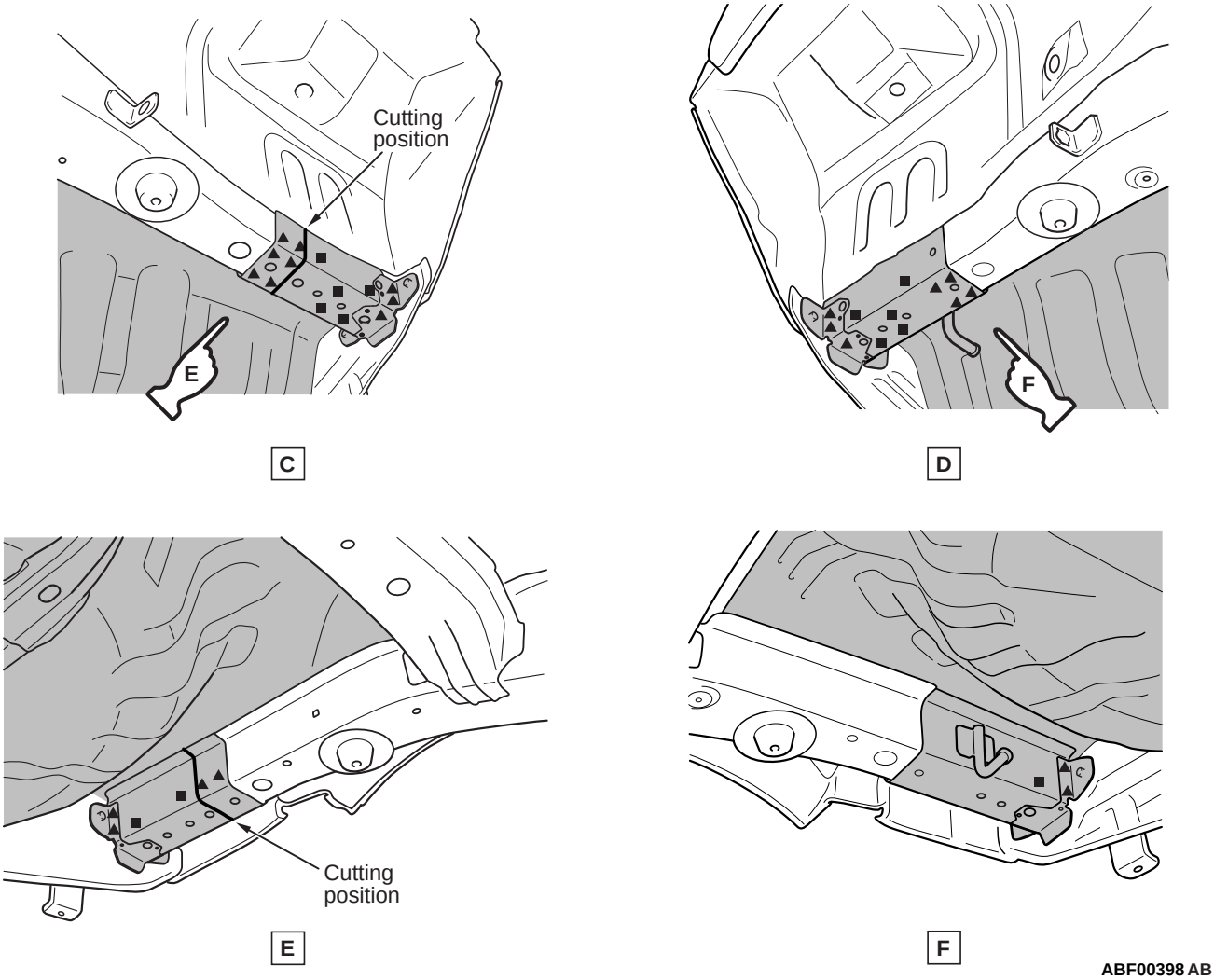

NOTE: Refer to the Rear End Panel section on P.3-2 for the welding points with the rear end panel.

GROUP 6

BODY COLOUR

CONTENTS

GENERAL INFORMATION 6-2
BODY COLOUR CHARTS 6-2

GENERAL INFORMATION

M4060000201383

OUTLINE OF CHANGE

The section "BODY COLOUR CHARTS" has been changed.

BODY COLOUR CHARTS

M4060002004704

Check the vehicle's body colour code, and then use this body colour chart to determine the refinishing paint supplier from which the colour can be purchased.

Colour	Colour code	Colour number	Colour name	Coating film structure	Composition of film
SILVER	A66	CSA10066	Cool Silver Metallic	2M	Metallic
ORANGE	M09	CSM10009	Sunrise Orange	2M	Metallic
RED	P19	CSP10019	Red Metallic	2M	Metallic
RED	P57	CSP10057	Red Metallic	2M	Metallic
MEDIUM BLUE	T69	CST10069	Cerulean Blue Mica	2P	Pearl
GREY	U17	CMU10017	Titanium Grey Metallic	2M	Metallic
WHITE	W19	AC11319	White Solid	2S	Solid
WHITE	W54	CSW10054	White Pearl	3P	Pearl
BLACK	X08	AC11008	Black Mica	2P	Pearl

NOTE:

- *The coating film structure indicates top coating only (2M: 2 coat metallic, 2P: 2 coat pearl, 2S: 2 coat solid, 3P: 3 coat pearl).*
- *For painting, inner panel colours should be similar to the outer panel colours.*