SERVICE BULLETIN

MITSUBISHI MOTORS

GLOBAL AFTER SALES OFFICE, MITSUBISHI MOTORS CORPORATION

PURPOSE : CHANGE	ISSUE NO. : MSB-15E54-003	DATE : 2015-09-30
SUBJECT : Changes and additions of the disassembly and reassembly procedures of the traction battery		<DESTINATION/MODEL> (As per attached sheet 1) <M/Y> 15
GROUP : Gr:54(Chassis electrical)		i-MiEV(HA3W)

1. Description :

Please refer to the attached document for the information about the change of mention in the applicable service manual.

2. Affected service manuals :

Please refer to the attached document (Attached sheet 1)

3. About the details :

Please refer to the attached document (Attached sheet 4))

Attached sheet 1

〈For overseas market〉

〈EU〉

Applicable manual	Pub. No.	Applicable title (INFO ID)	Contents
2015 i-MiEV Workshop Manual	ENG: CHAE15E1-CD FRE: CHAF15E1-CD GER: CHAG15E1-CD SPA: CHAS15E1-CD ITA: CHAI15E1-CD	SPECIAL TOOLS (M549-40-020-18500-01)	Attached sheet 4 (1/22)
		CHECK AND REPLACEMENT OF THE HIGH-VOLTAGE FUSE INSIDE THE TRACTION BATTERY (M549-40-300-10200-01)	Attached Sheet 4 (2/22)
		BATTERY MANAGEMENT UNIT (BMU) (M549-40-120-08100-01)	Attached sheet 4 (3/22)
		SERVICE PROCEDURE (M549-40-380-06700-01)	Attached sheet 4 (4/22), (5/22)
		SERVICE PROCEDURE CHECK SHEET (M549-40-390-06400-01)	Attached sheet 4 (6/22), (7/22)
		TRACTION BATTERY COVER REMOVAL AND INSTALLATION (M549-40-400-04200-01)	Attached sheet 4 (8/22), (9/22)
		BUS BAR REMOVAL AND INSTALLATION (M549-40-430-04300-01)	Attached sheet 4 (10/22), (11/22)
		JFB COVER REMOVAL AND INSTALLATION (M549-40-460-01100-01)	Attached Sheet 4 (12/22), (13/22)
		FOUR-CELL MODULE REMOVAL AND INSTALLATION (M549-40-470-04100-01)	Attached sheet 4 (14/22), (15/22)
		ELECTRIC CURRENT SENSOR REMOVAL AND INSTALLATION (M549-40-480-04800-01)	Attached sheet 4 (16/22)
		JFB REMOVAL AND INSTALLATION (M549-40-490-01200-01)	Attached sheet 4 (17/22)-(19/22)
		CONTACTOR REMOVAL AND INSTALLATION (M549-40-510-04200-01)	Attached sheet 4 (20/22), (21/22)
		AIR LEAK CHECK (M549-40-520-05000-01)	Attached sheet 4 (22/22)

Tool	Number	Name	Use
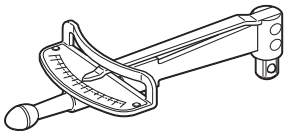 MB992295	MB992295	Torque wrench (2 – 12) 6.3	• Traction battery high-voltage fuse No. 2 and 3 installation • Work hole lid installation
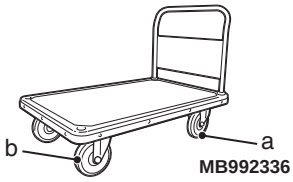 MB992336	MB992336 a: MB992353 × 2 b: MB992354 × 2	EV battery cart a: Rigid caster b: Swivel caster	Traction battery removal and installation
 MB992659	MB992659	EV battery lifting cart	Traction battery removal and installation [when the EV battery cart (MB992336) cannot be used.]
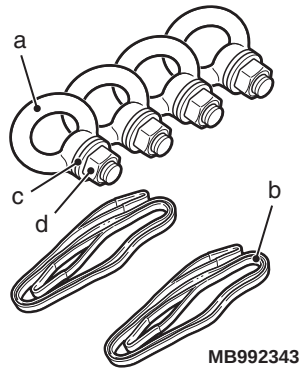 MB992343	MB992343 a: MB992344 × 4 b: MB992345 × 2 c: MF450156 × 8 d: MU001480 × 4	EV battery sling tool cart a: Eye bolt b: EV battery sling belt c: Washer d: Hexagon nut	Traction battery moving
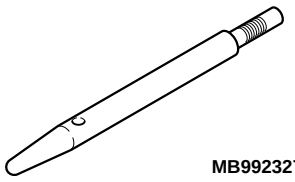 MB992327	MB992327	EV battery guide	Traction battery installation (2 pieces are used)

<Added>

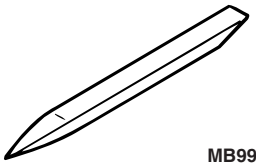 MB990784	MB990784	Ornament remover	Traction battery high-voltage fuse No.3 removal

CHECK AND REPLACEMENT OF THE HIGH-VOLTAGE FUSE INSIDE THE TRACTION BATTERY

M1549403000102

⚠ DANGER

When servicing the high-voltage system parts, be sure to wear the specified protection equipment and disconnect the service plug to interrupt the high-voltage supply (Refer to GROUP 00 – Precautions before service, Precautions on how to use the high-voltage vehicle).

1. Remove the front floor covers A and B (Refer to GROUP 51 – Under Cover).
2. Remove the work hole lid for the traction battery (Refer to P.54Dc-150).

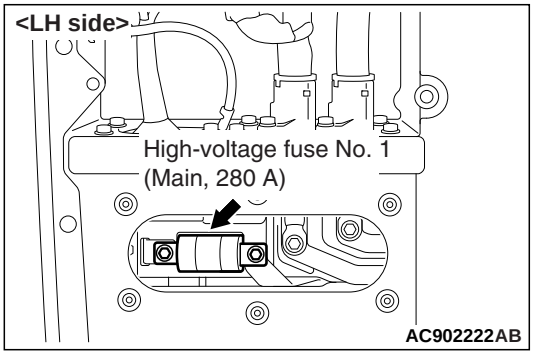

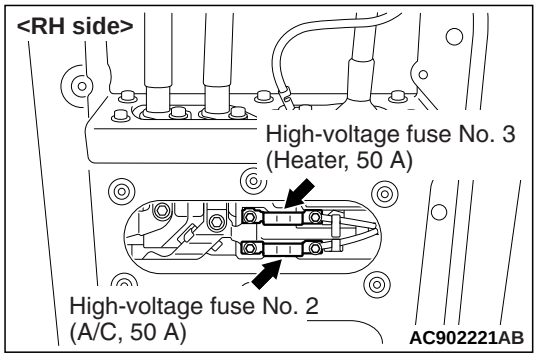

3. Remove each mounting bolt and remove each high-voltage fuse.
4. Check the resistance between the high-voltage fuses, and if there is no continuity (open circuit), replace the high-voltage fuses.

⚠ CAUTION

When tightening the mounting bolts, secure the high-voltage fuse terminal portion, because there is a risk of damage to the high-voltage fuse when an excessive force applies to the high-voltage fuse main body.

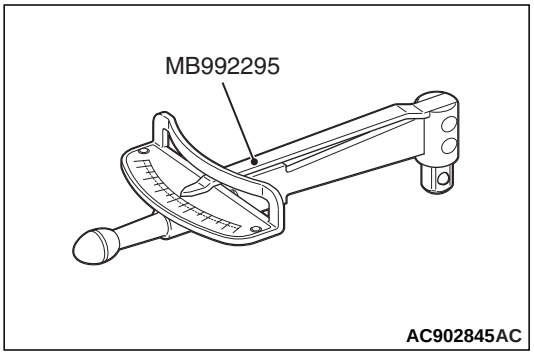

5. Tighten each mounting bolt to the specified torque. Tighten each mounting bolt for the high-voltage fuse No. 2 and 3 to the specified torque using the torque wrench (special tool: MB992295).

   Tightening torque:
   High-voltage fuse No. 1: 9.0 ± 3.0 N·m
   High-voltage fuse No. 2 and 3: 7.0 ± 3.0 N·m
6. Install the work hole lid for the traction battery (Refer to P.54Dc-150).
7. Install the front floor covers A and B (Refer to GROUP 51 – Under Cover).

<Added>

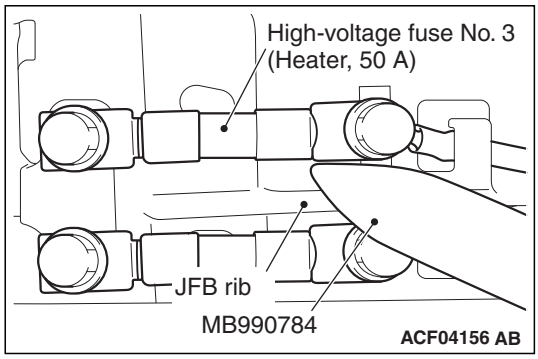

⚠ CAUTION

To pull out high-voltage fuse No.3 (heater, 50A), wedge the ornament remover (special tool: MB990784) into the JFB ribs to counterhold the fuse.

MS

BATTERY MANAGEMENT UNIT (BMU)

REMOVAL AND INSTALLATION

M1549401200081

⚠ *DANGER*

- ***When high voltage system components are serviced, be sure to remove service plug to shut down high voltage (Refer to GROUP 00 – Precautions before service, Precautions on how to use the high-voltage vehicle).***
- ***Do not disassemble any battery management unit (BMU) other than those described in this manual.***

⚠ CAUTION

When replacing the battery management unit (BMU), use the M.U.T.-III to perform the learned value writing (Refer to GROUP 00 – Procedures for Writing BMU Learning Value).

Pre-removal operation	Post-installation operation
• Traction battery cover removal (Refer to P.54Dc-161)	• Traction battery cover installation (Refer to P.54Dc-161)

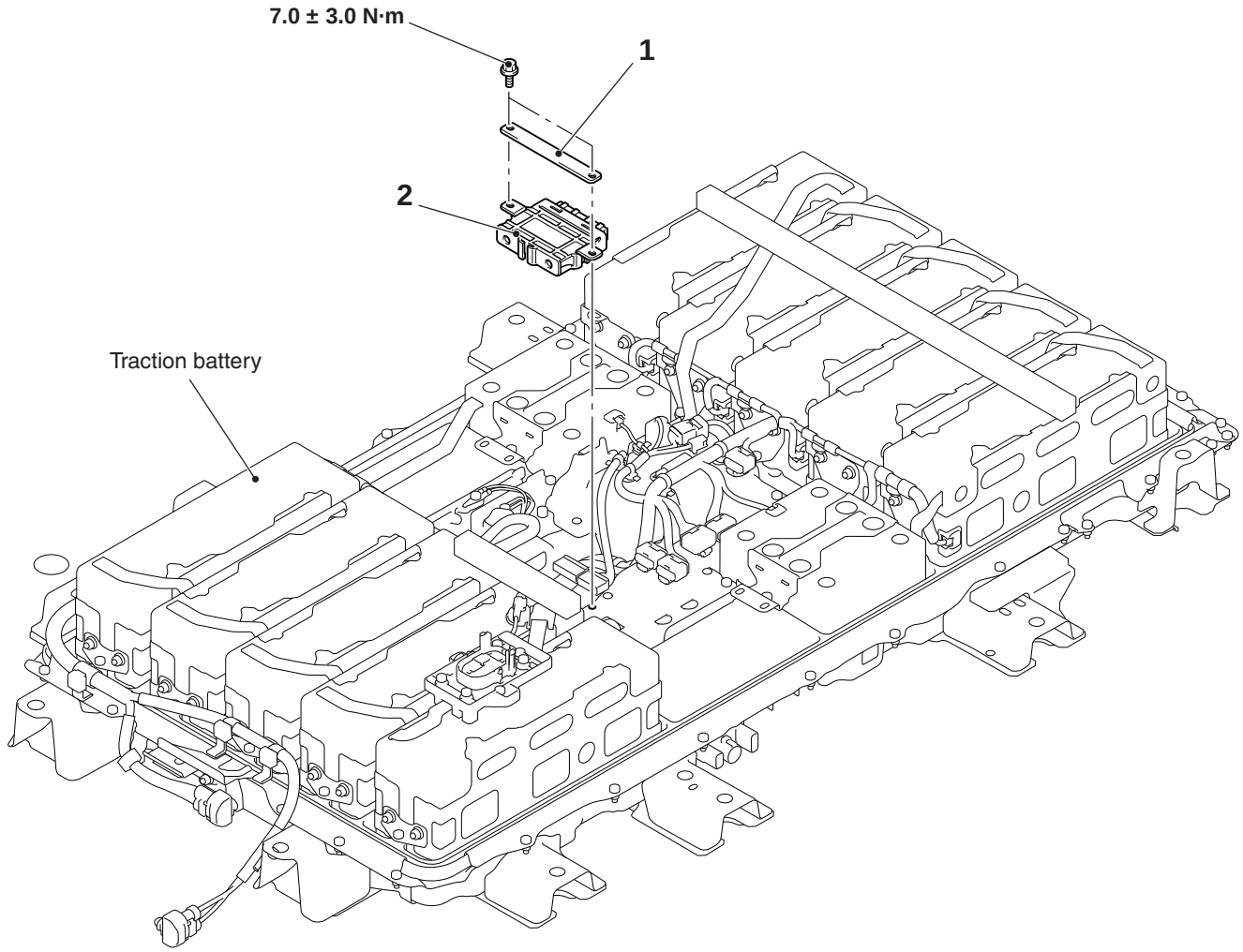

ACE02364 AB

Removal steps

1. BMU reinforcement
2. Battery management unit (BMU)

MSB-1 << A >> ABC <Added>

<Added> 5

REMOVAL SEARVICE POINT
<< A >> BATTERY MANAGEMENT UNIT (BMU) REMOVAL
Ensure that the weld nuts do not fall down from the JFB.

TRACTION BATTERY DISASSEMBLY AND REASSEMBLY

SERVICE PROCEDURE

M1549403800067

⚠ CAUTION

- **When you assemble and disassemble the traction battery, always wear electric-insulated gloves, boots and protection glasses (Refer to GROUP 00 – Precautions before service, Precautions on how to use the high-voltage vehicle).**
- **After you remove the traction battery, be sure to disconnect all of the four bus bars from the front and rear modules to reduce the possibility of electric shock. Do not connect the bus bars until you complete the service work.**
- **Use special tool (MB992915) to protect the unaffected area (which you do not service) of the removed traction battery.**
- **When you service an electric terminal on the module, remove the respective cover only (do not remove the other covers).**
- **Before engaging the bus bar, make sure that it is not scratched or contaminated.**
- **A damaged wiring harness clip should be replaced with new one.**
- **Always use a torque wrench to tighten a nut or bolt to the specified torque. Then identify it with a paint mark.**

After assembling the traction battery, check the followings:

1. **Before mounting the traction battery to the vehicle, check the traction battery for air leaks (Refer to P.54Dc-179).**
2. **After the traction battery assembly is mounted, use the M.U.T.-III to select and execute "CMU ID numbering" on the BMU special function menu to number the CMUs for identification. Then measure the traction battery capacity.**
3. **Use the M.U.T.-III to check that no diagnosis code is set.**

<Incorrect>

When any of the cell modules is replaced, use the M.U.T.-III to select and execute "CMU ID numbering" on the BMU special function menu to number the CMUs for identification after the traction battery assembly has been mounted.

<Correct>

*NOTE: *: Using the recommended tools allows you to number the CMU and measure the traction battery capacity without mounting the traction battery.*

EIGHT-CELL MODULE REMOVAL AND INSTALLATION

Service procedure	Work description	Reference page
1	Traction battery cover removal and installation	P.54Dc-161

CONTACTOR REMOVAL AND INSTALLATION

Service procedure	Work description	Reference page
1	Traction battery cover removal and installation	P.54Dc-161
2	Air duct removal and installation	P.54Dc-163
3	Pad removal and installation	P.54Dc-164
4	Bus bar removal and installation	P.54Dc-164
5	JFB cover removal and installation	P.54Dc-169
6	JFB removal and installation	P.54Dc-174
7	Contactor removal and installation	P.54Dc-176

<Incorrect>

COOLING FAN REMOVAL AND INSTALLATION

Service procedure	Work description	Reference page
1	Traction battery cover removal and installation	P.54Dc-161
2	Cooling fan removal and installation	P.54Dc-177

SERVICE PLUG REMOVAL AND INSTALLATION

Service procedure	Work description	Reference page
1	Traction battery cover removal and installation	P.54Dc-161
2	Air duct removal and installation	P.54Dc-163
3	Pad removal and installation	P.54Dc-164
4	Bus bar (service plug) removal and installation	P.54Dc-164

<Correct>

5	BMU removal and installation
6	JFB cover removal and installation
7	JFB removal and installation
8	Electric current sensor removal and installation
9	Resistor removal and installation
10	Contactor removal and installation

Attached sheet 4 (6/22)

FOUR-CELL MODULE REMOVAL AND INSTALLATION

Check column	Service procedure	Work description
	1	Traction battery cover removal and installation
	2	Air duct removal and installation
	3	Pad removal and installation
	4	Bus bar removal and installation
	5	JFB cover removal and installation
	6	Four-cell module removal and installation
	7	Traction battery module replacement

ELECTRIC CURRENT SENSOR REMOVAL AND INSTALLATION

Check column	Service procedure	Work description
	1	Traction battery cover removal and installation
	2	Air duct removal and installation
	3	Pad removal and installation
	4	Bus bar removal and installation
	5	JFB cover removal and installation
	6	Electric current sensor removal and installation

RESISTOR REMOVAL AND INSTALLATION

Check column	Service procedure	Work description
	1	Traction battery cover removal and installation
	2	Air duct removal and installation
	3	Pad removal and installation
	4	Bus bar removal and installation
	5	JFB cover removal and installation
	6	JFB removal and installation
	7	Resistor removal and installation

CONTACTOR REMOVAL AND INSTALLATION

Check column	Service procedure	Work description
	1	Traction battery cover removal and installation
	2	Air duct removal and installation
	3	Pad removal and installation
	4	Bus bar removal and installation
	5	JFB cover removal and installation
	6	JFB removal and installation
	7	Contactor removal and installation

<Incorrect>

Attached sheet 4 (7/22)

5	BMU removal and installation
6	JFB cover removal and installation
7	JFB removal and installation
8	Electric current sensor removal and installation
9	Resistor removal and installation
10	Contactor removal and installation

<Correct>



Attached sheet 4 (6/22)

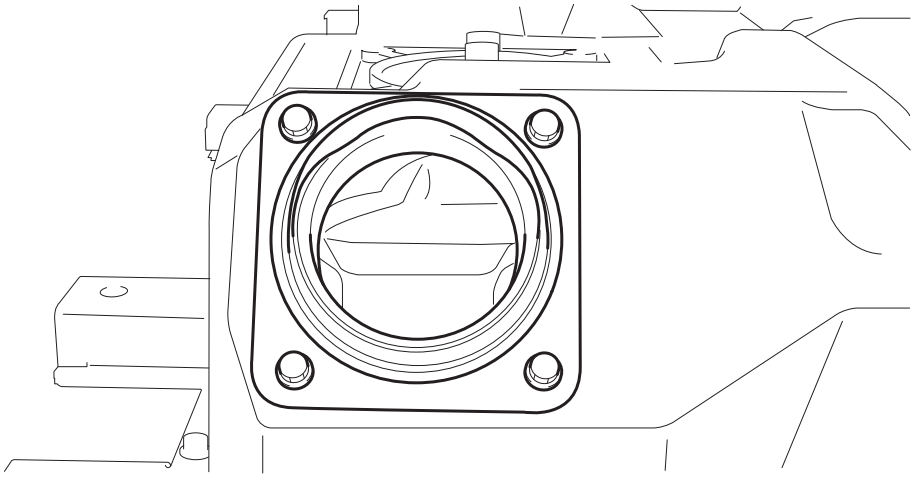

ACC07225

2. Remove the four fasteners to remove the cooling duct.

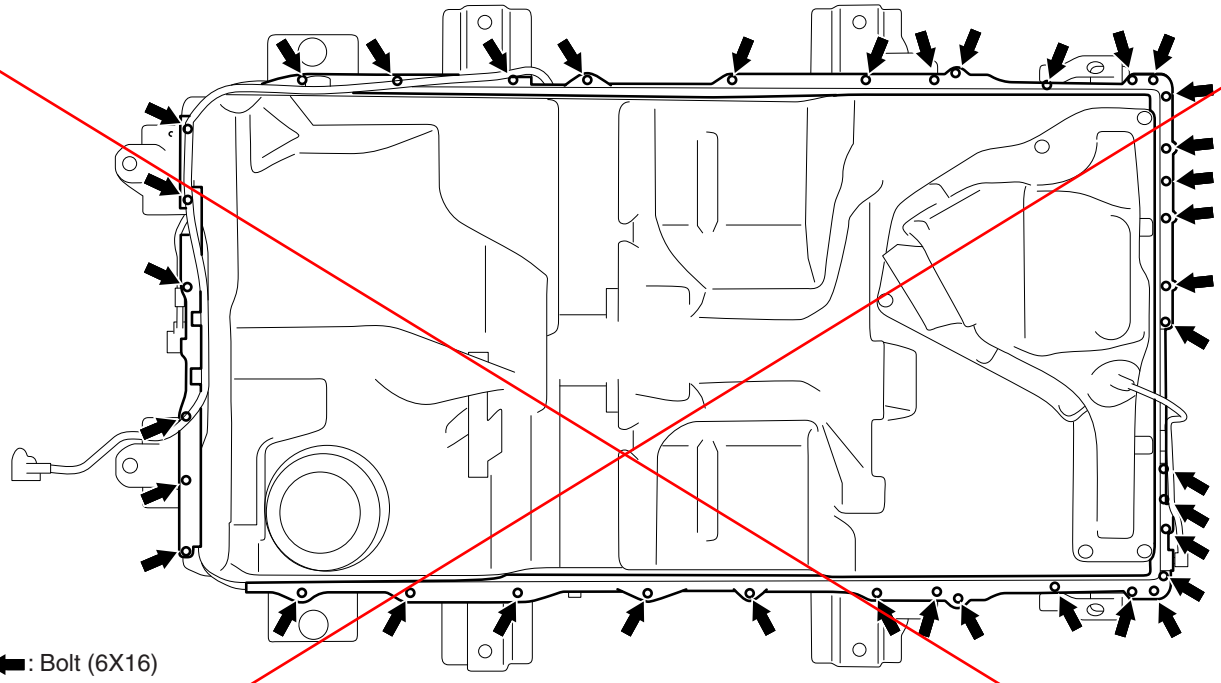

ACC05938AC

3. Remove the 38 fasteners securing the traction battery cover to the traction battery tray.
   Tightening torque:
   10 ± 2 N·m
4. Remove the plate securing the traction battery cover to the traction battery tray.

<Incorrect>

Attached sheet 4 (9/22)

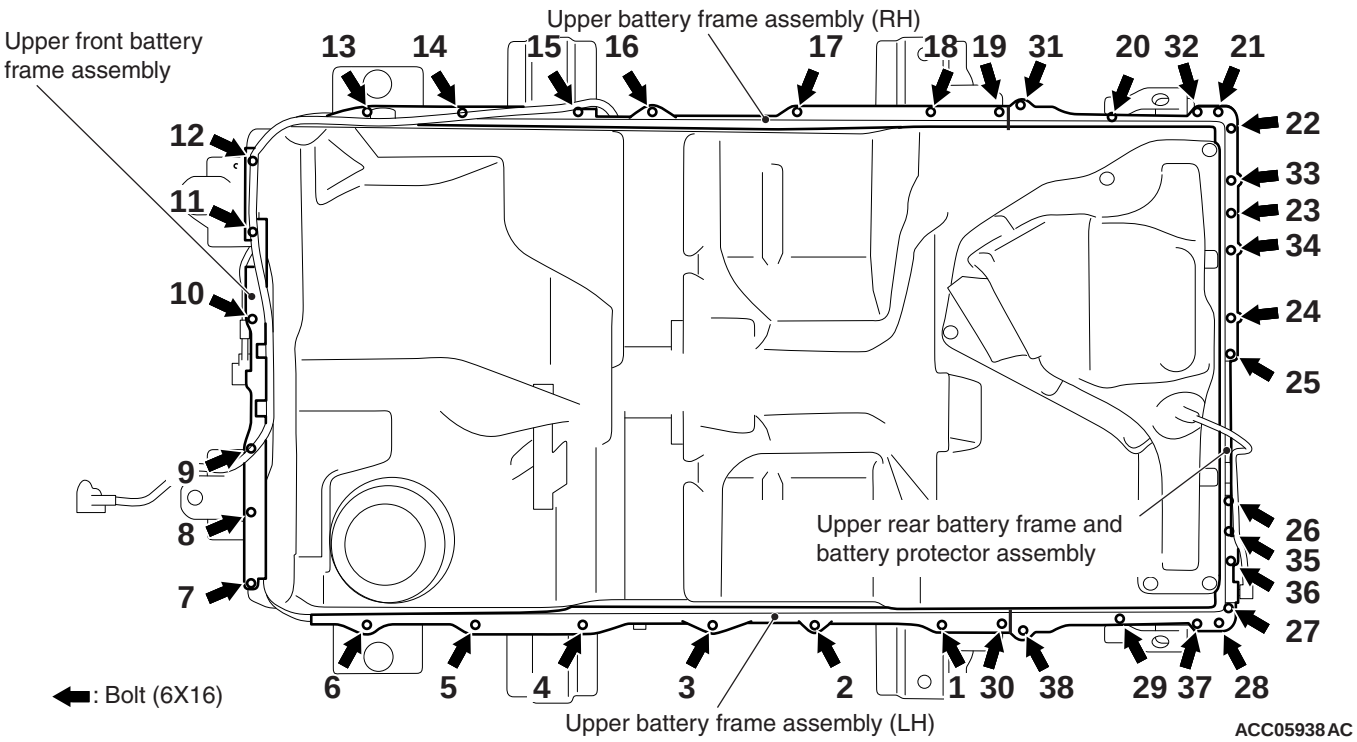

3. Remove the 38 fasteners securing the traction battery cover to the traction battery tray.

   NOTE: Tighten the 38 fasteners securing the traction battery cover to the traction battery tray in the order shown.

   Tightening torque:10 ± 2 N·m

4. Remove the plate and protector securing the traction battery cover to the traction battery tray.

<Correct>

Attached sheet 4 (8/22)

<Incorrect>

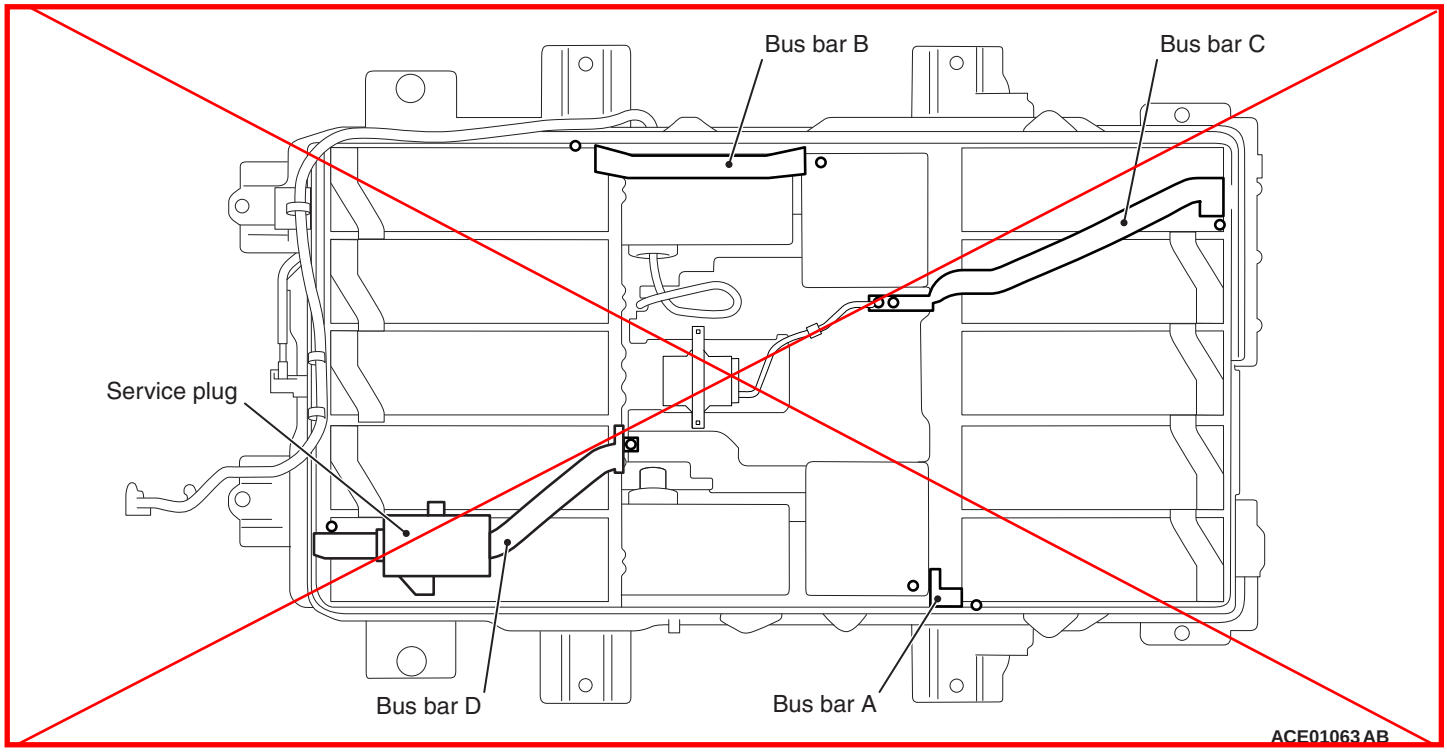

⚠ CAUTION
Before installing the bus bar shown by "A" in the figure, use an multimeter to check that there is no potential difference between the two module terminals at the bus bar ends.

2. Remove the four bus bars in the alphabetical order shown.

EIGHT-CELL MODULE REMOVAL AND INSTALLATION

M1549404400040

NOTE:

Attached sheet 4 (11/22)

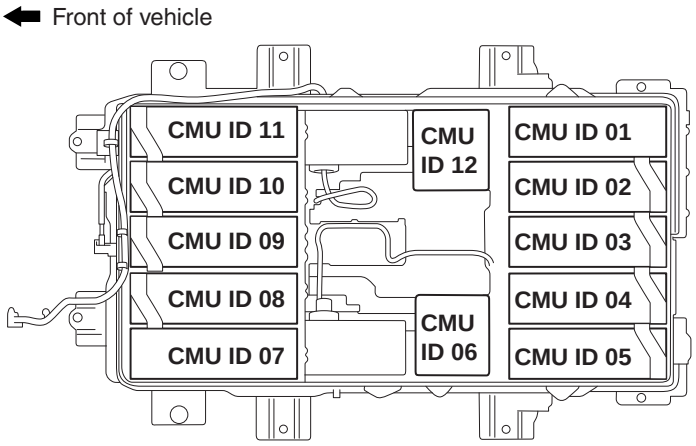

The CMU IDs on the module are assigned as shown.

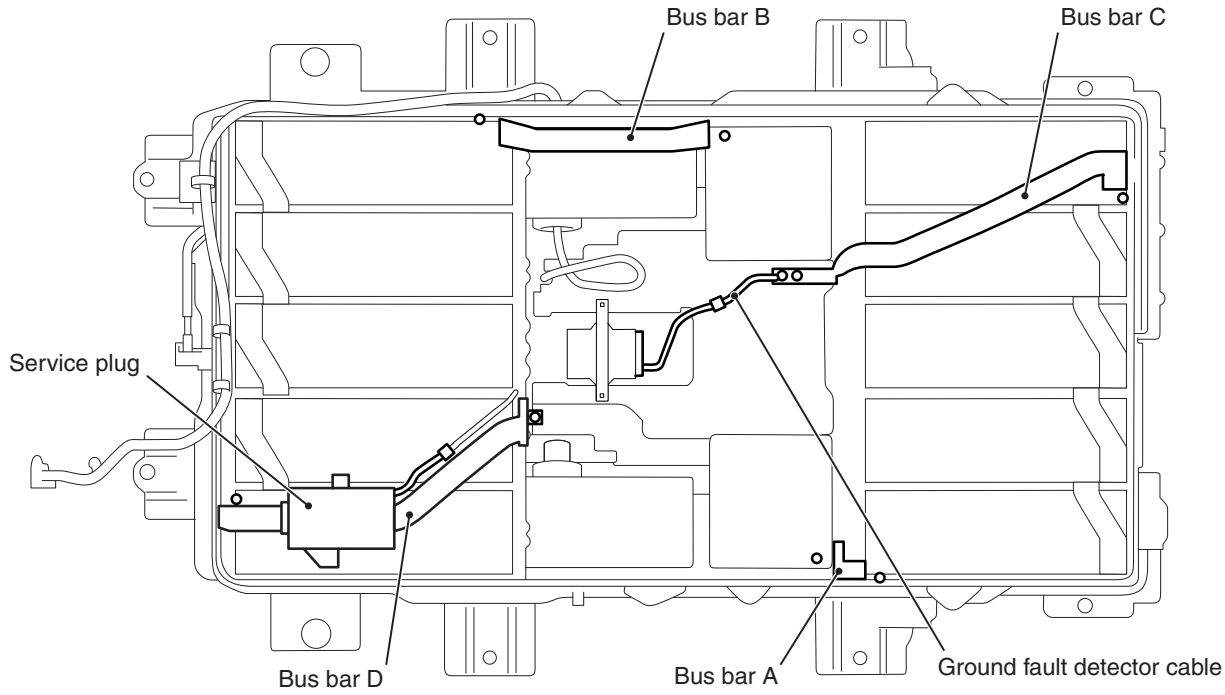

2'. Disconnect the service plug connector.

<Correct>

Attached sheet 4 (10/22)

JFB COVER REMOVAL AND INSTALLATION

M1549404600011

Attached sheet 4 (13/22) <Added>

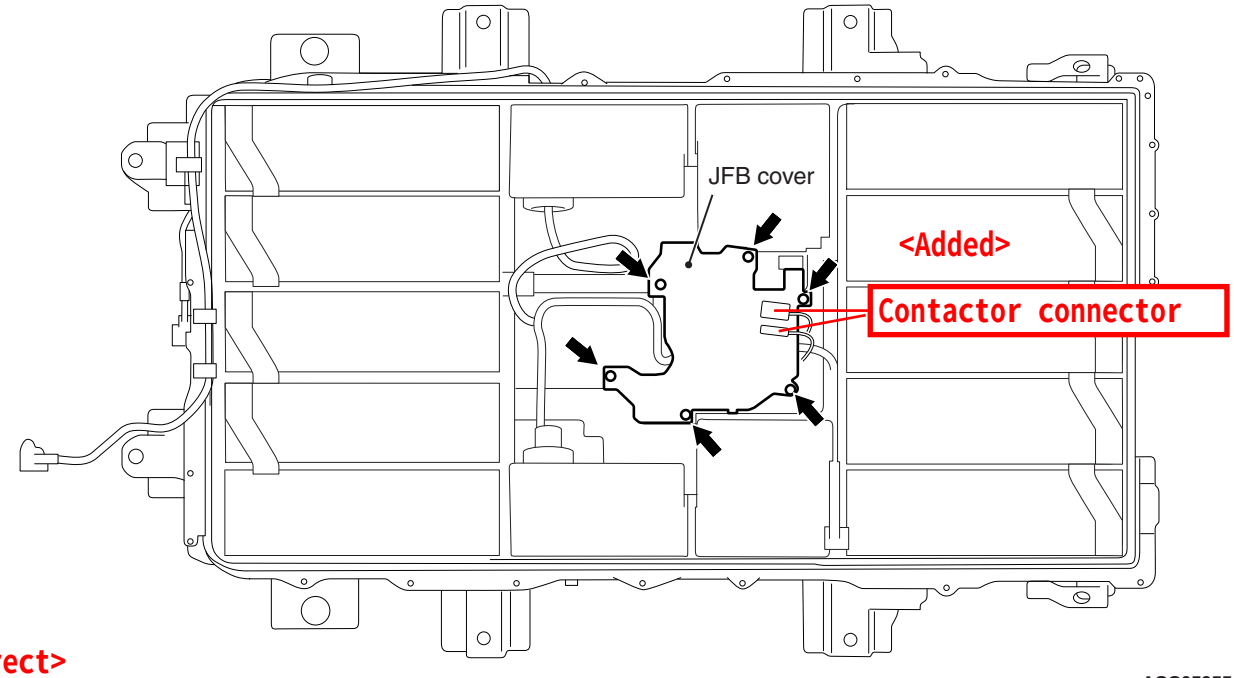

<Incorrect>

ACC05955AC

1. ~~Remove the six fasteners from the JFB cover.~~

⚠ CAUTION
Before loosening the JFB bar, make sure that the four bus bar are removed (Refer to P.54Dc-164).

2. Remove the JFB cover.

1. Disengage the six fasteners and the contactor connector from the JFB cover.

<Correct>

FOUR-CELL MODULE REMOVAL AND INSTALLATION

M1549404700041

NOTE:

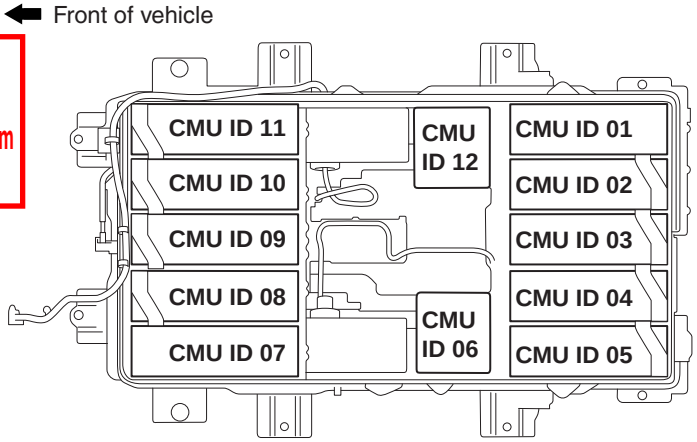

ACC07060AC

The CMU IDs on the module are assigned as shown.

Attached sheet 4 (13/22)

JFB COVER REMOVAL AND INSTALLATION

M1549404600011

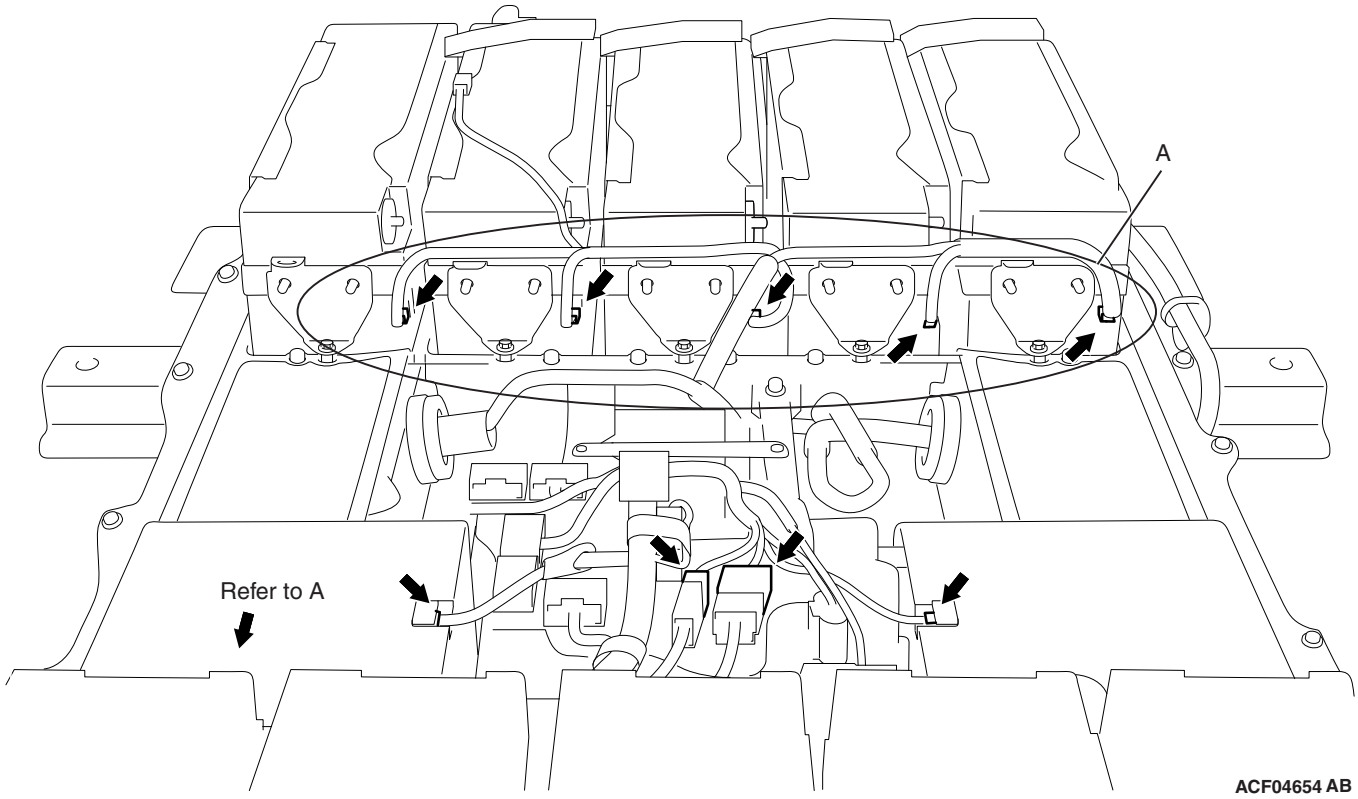

1'. Disconnect the contactor connectors from the respective module to remove the wiring harnesss.

Attached sheet 4 (12/22)

Four-cell module (right side of the vehicle) removal

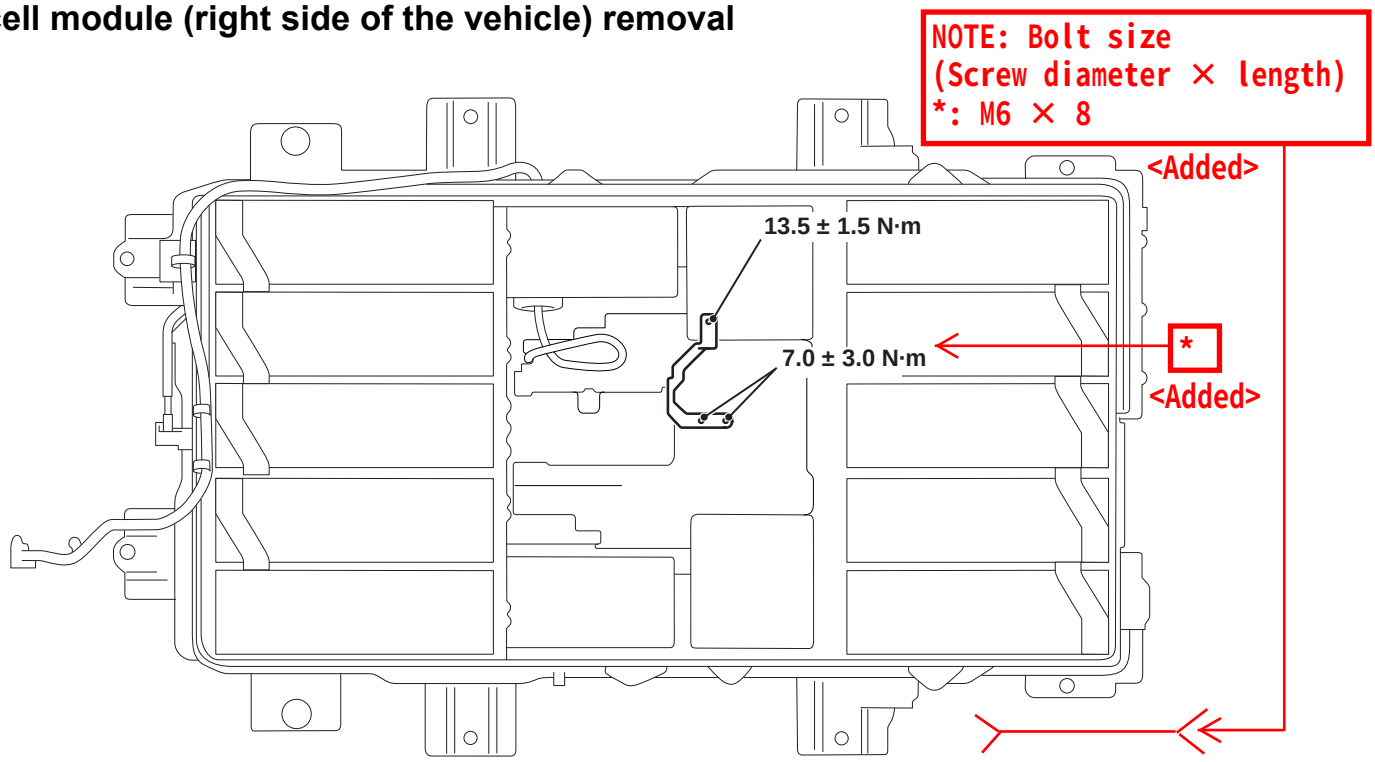

ACE01067AE

1. Disconnect the bus bar (three locations). Then remove the bus bar.

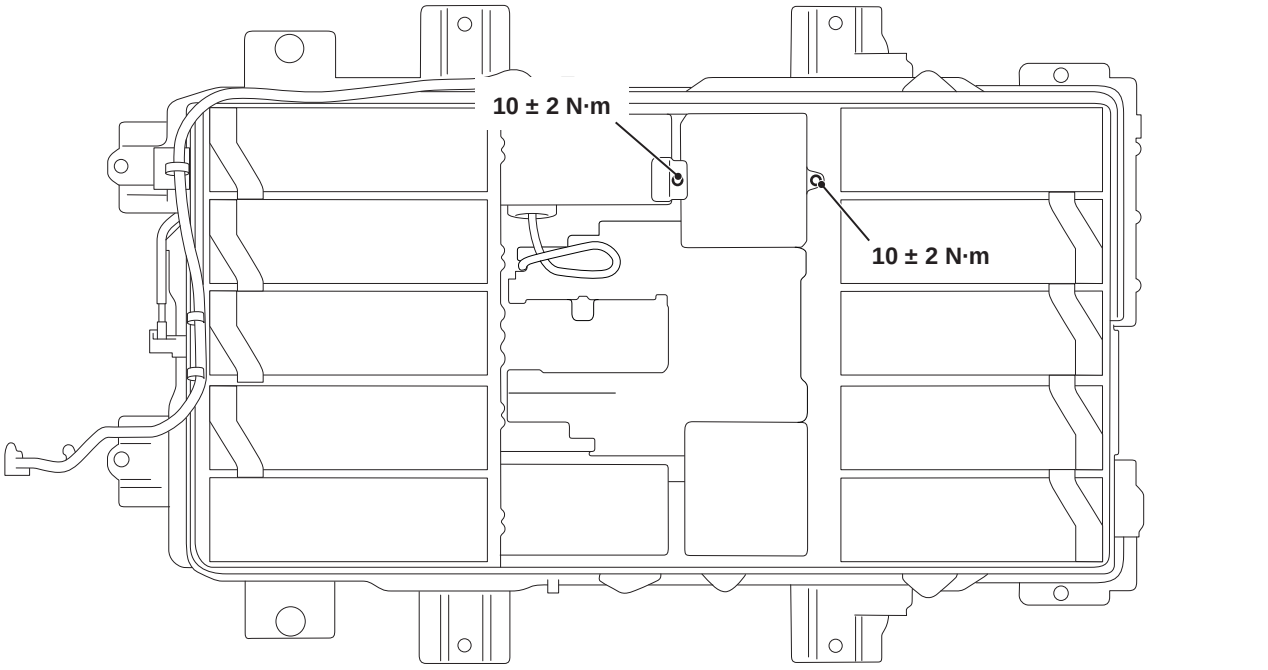

ACC05958AC

2. Remove the two module securing fasteners.

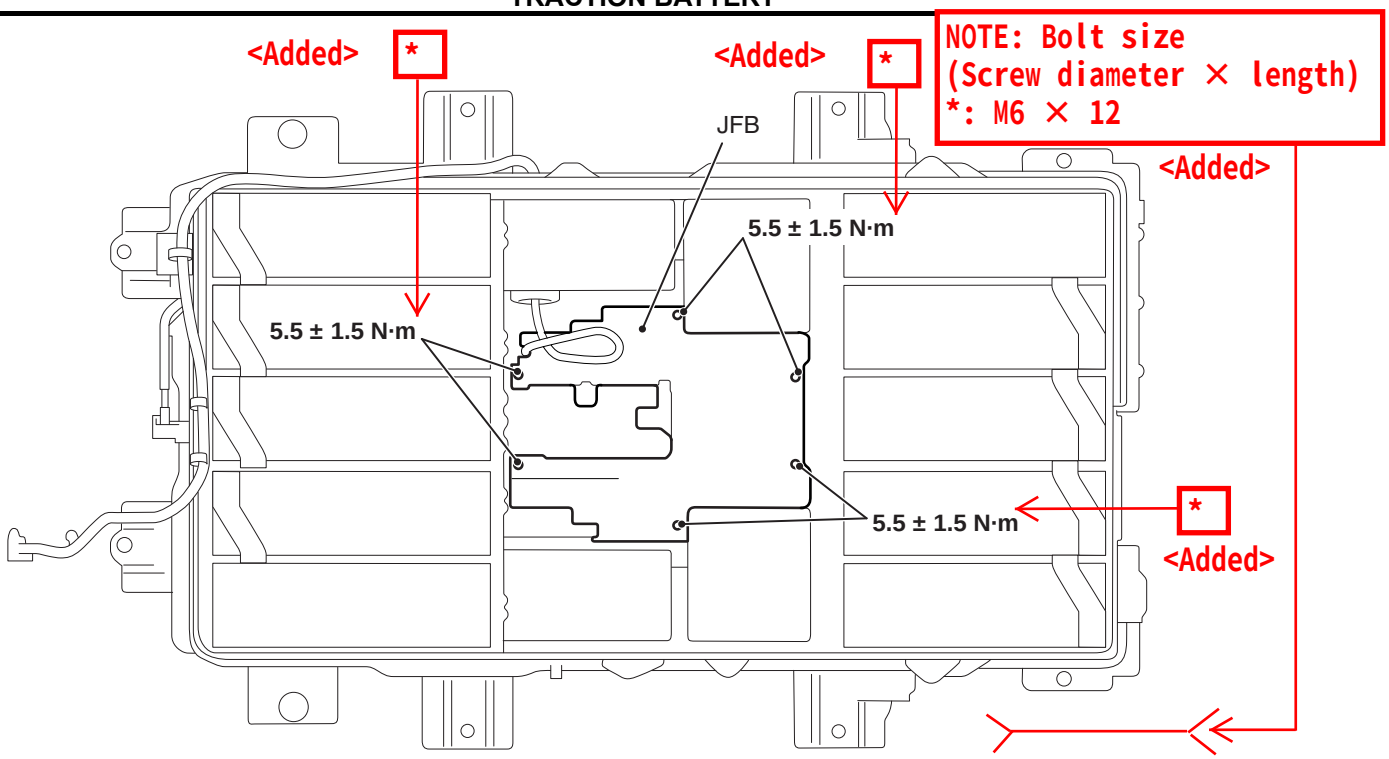

2. Remove the six fasteners from the JFB.

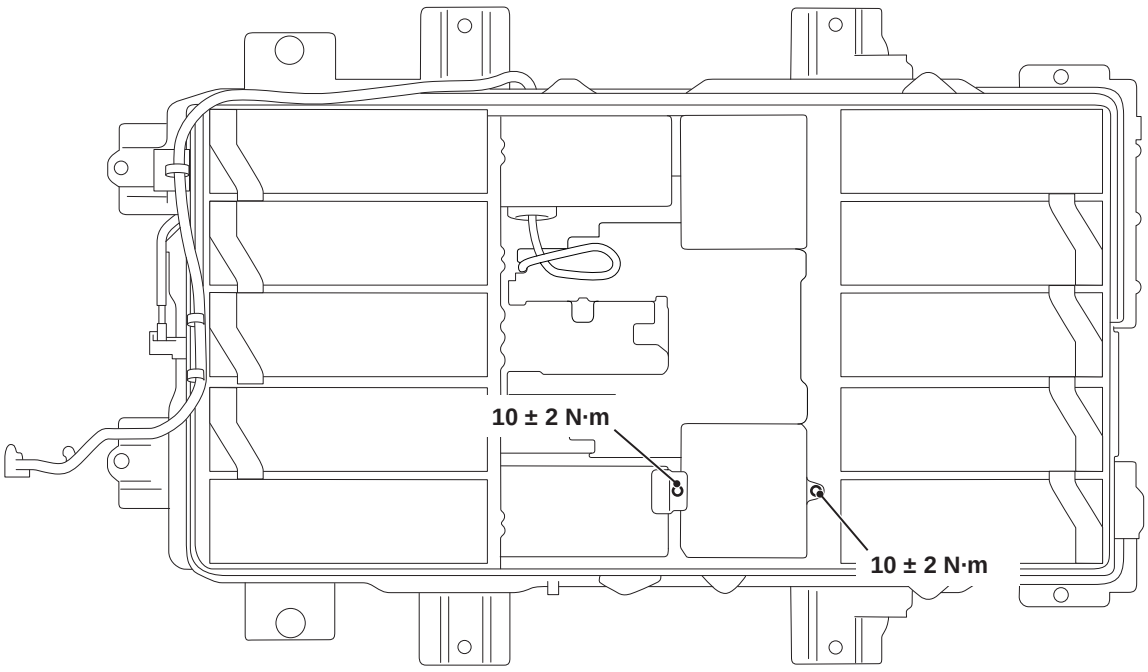

3. Remove the two module securing fasteners.

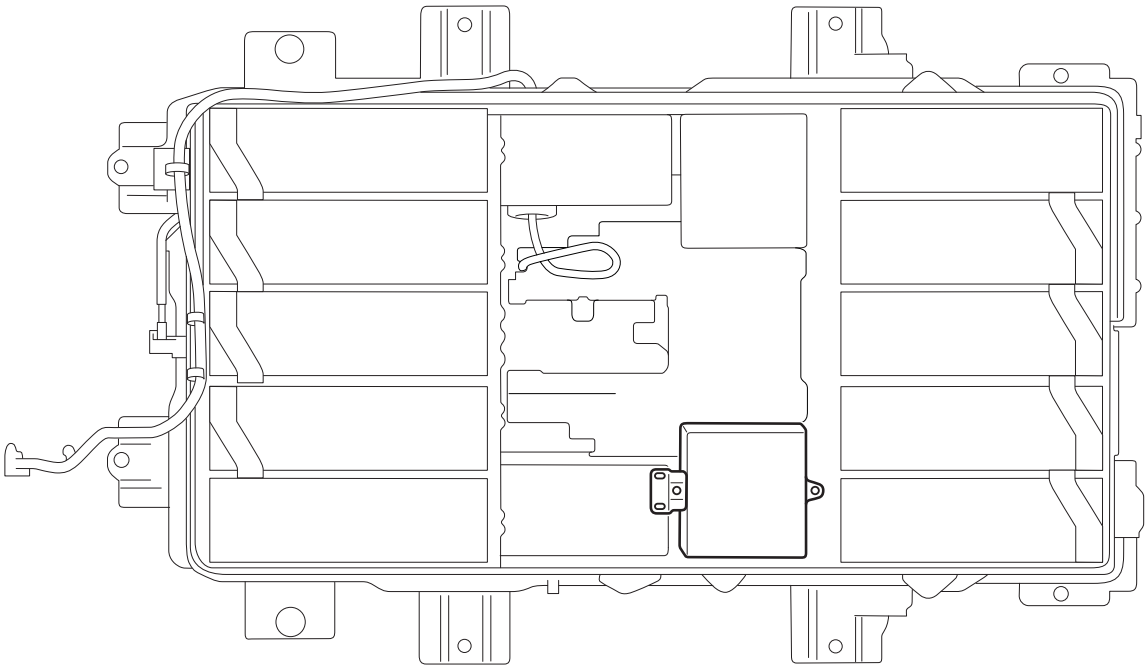

ACC05963

4. Remove the module.

⚠ CAUTION

Before using the replacement module, always use the special tool to charge it. For how to charge, refer to P.54Dc-178.

5. Replace it with the replacement module.

ELECTRIC CURRENT SENSOR REMOVAL AND INSTALLATION

M1549404800048

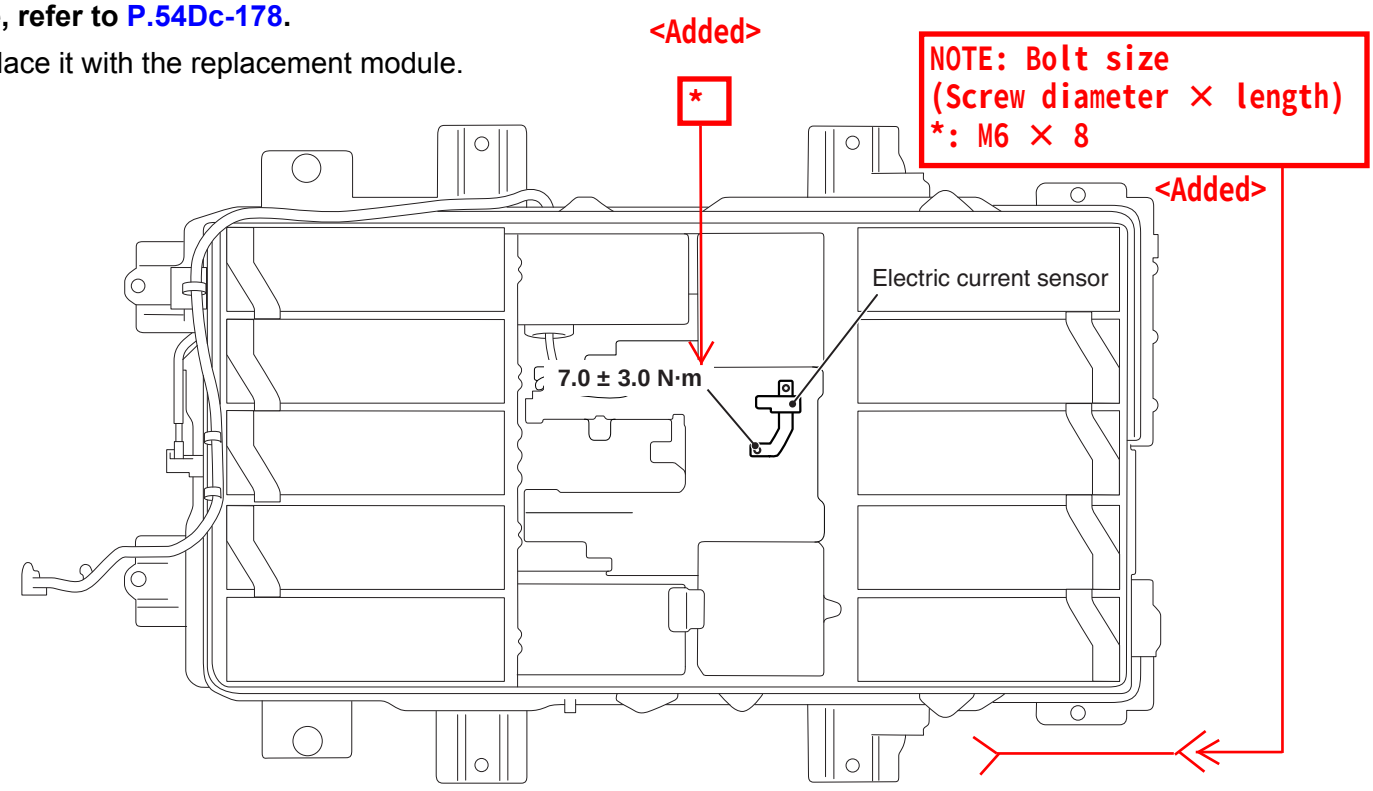

ACE01064 AB

1. Disconnect the bus bar (one location).
2. Remove the bus bar and the electric current sensor.

Attached sheet 4 (17/22)

JFB REMOVAL AND INSTALLATION

M1549404900012

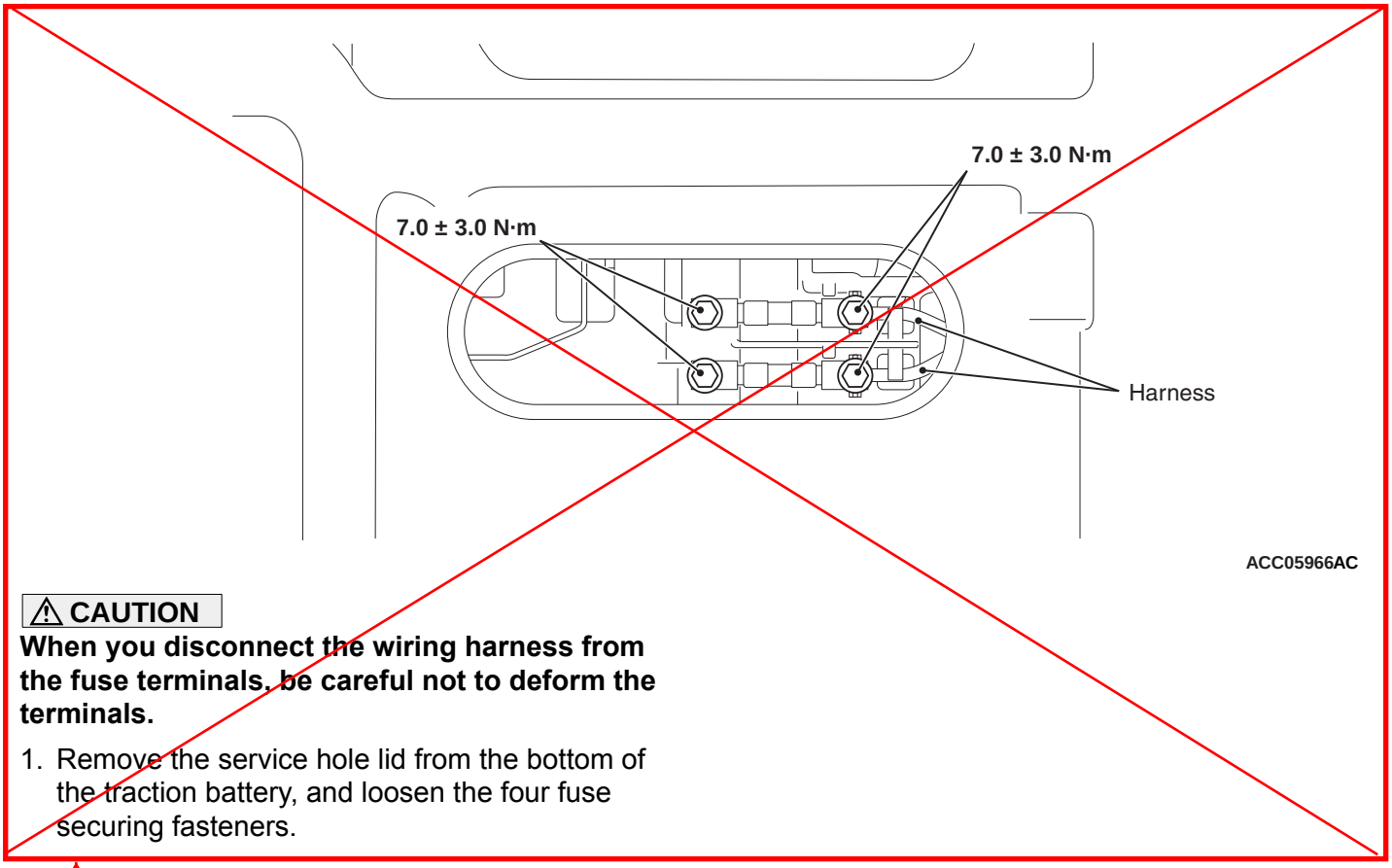

⚠ CAUTION

When you disconnect the wiring harness from the fuse terminals, be careful not to deform the terminals.

1. Remove the service hole lid from the bottom of the traction battery, and loosen the four fuse securing fasteners.

<Incorrect>

Attached sheet 4 (18/22)

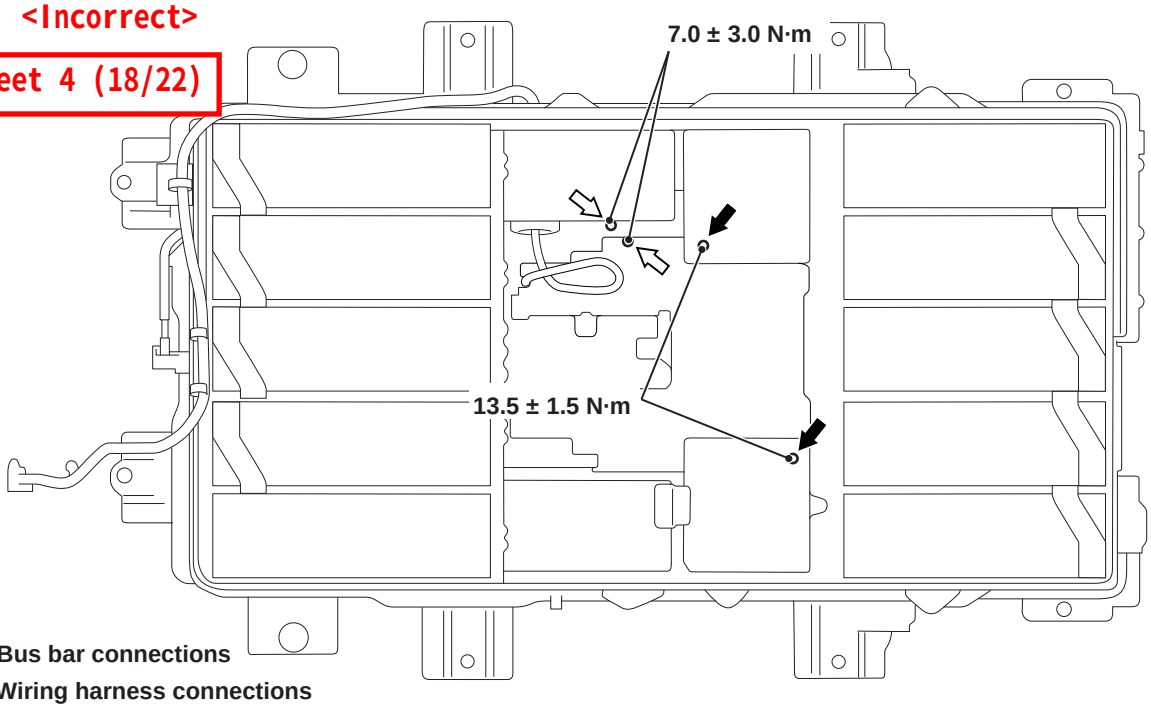

2. Loosen the bus bar (two locations) and the wiring harness wires (two locations).

Attached sheet 4 (18/22)

JFB REMOVAL AND INSTALLATION

M1549404900012

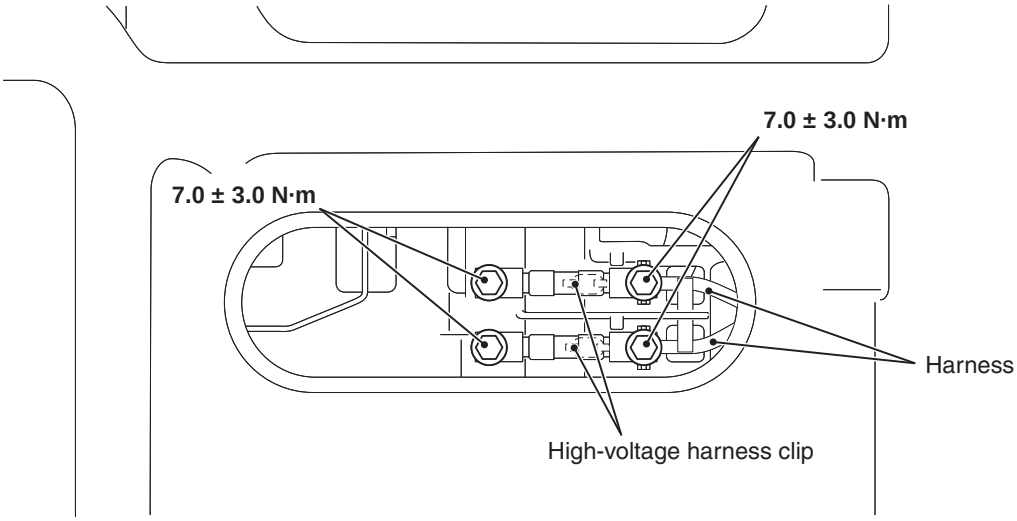

ACC05966AC

2'. Remove the clip in the high-voltage harness.

⚠ CAUTION

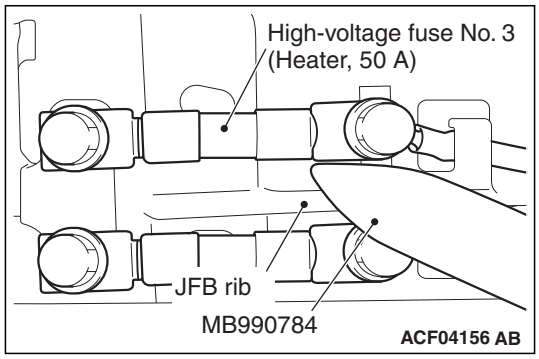

ACF04156 AB

To pull out high-voltage fuse No. 3 (heater, 50A), wedge the ornament remover (special tool: MB990784) into the JFB ribs to counterhold the fuse.

- **When you disconnect the wiring harness from the fuse terminals, be careful not to deform the terminals.**

1. Remove the service hole lid from the bottom of the traction battery, and loosen the four fuse securing fasteners.

<Correct>

Attached sheet 4 (17/22)

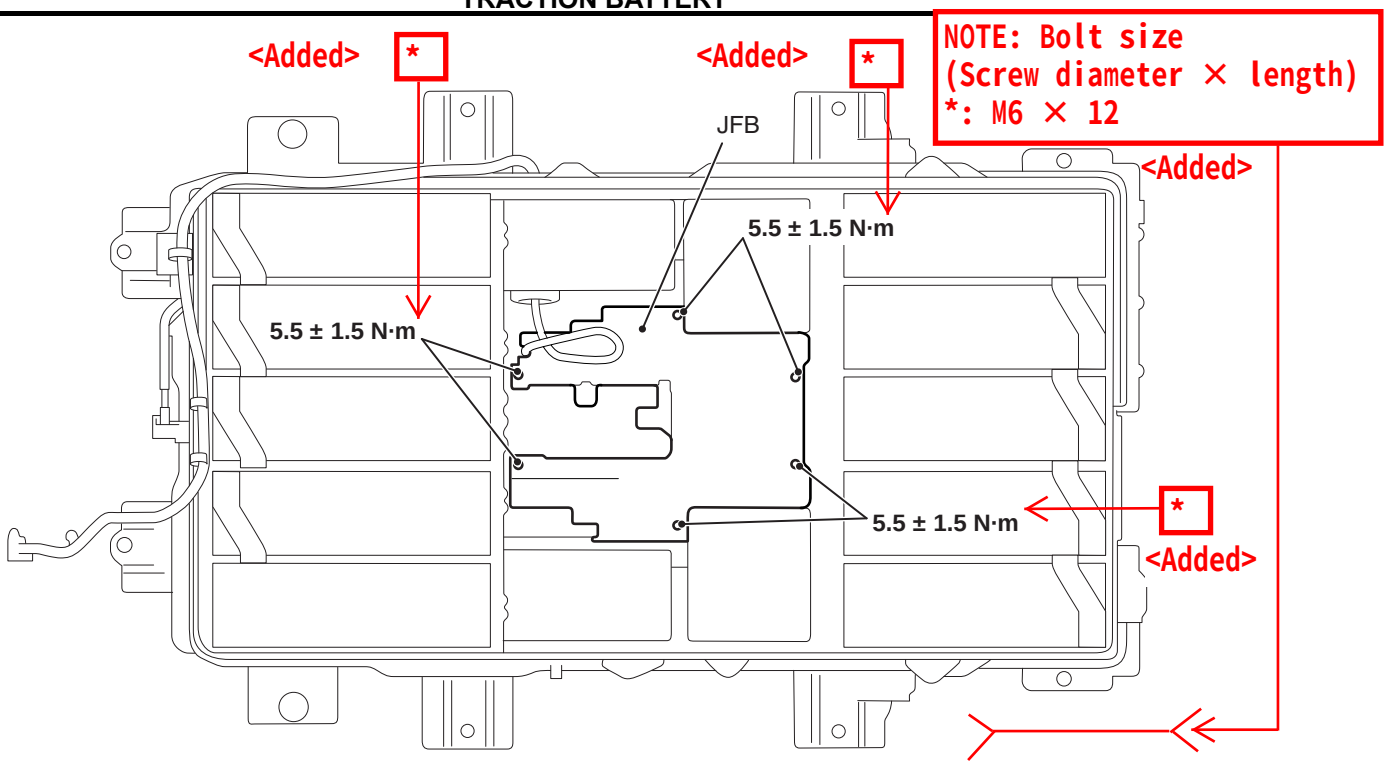

ACC05961AC

3. Remove the six fasteners from the JFB.
4. Remove the JFB.

RESISTOR REMOVAL AND INSTALLATION

M1549405000045

Top surface side of drive battery

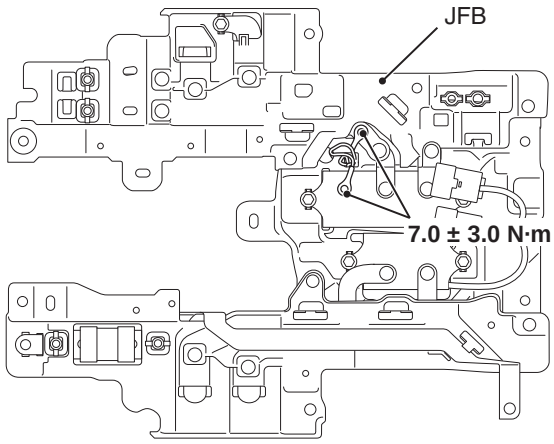

Bottom surface side of drive battery

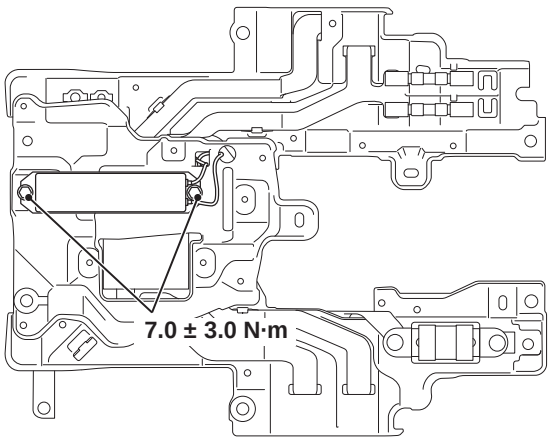

ACE01066 AB

1. Remove the four resistor securing fasteners.
2. Remove the resistor.

CONTACTOR REMOVAL AND INSTALLATION

M1549405100042

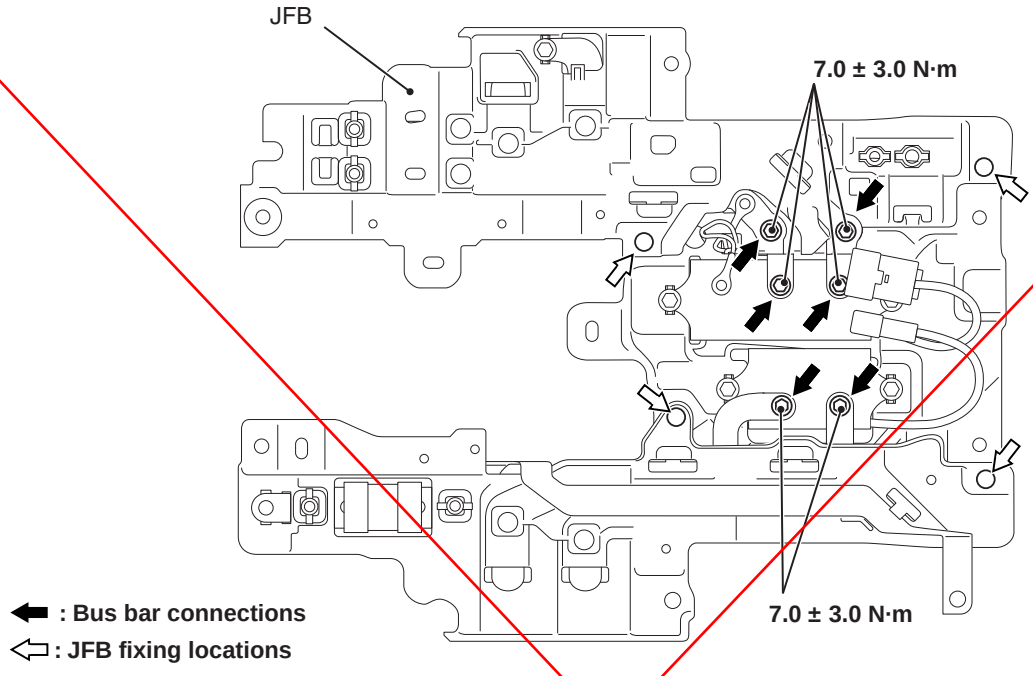

ACE01065 AC

1. Loosen the bus bar (sux locations) and the JFB (four locations).

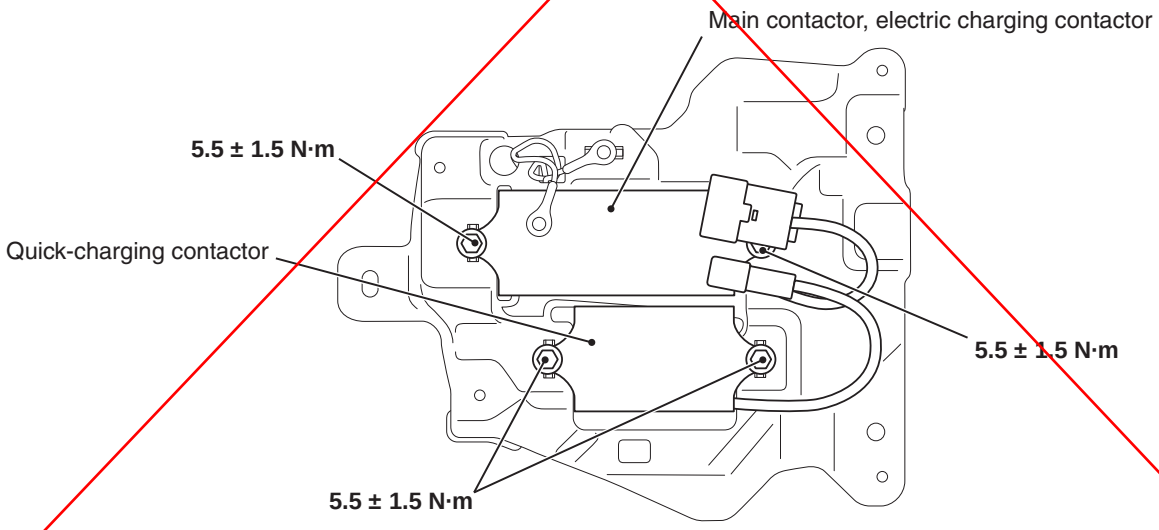

ACE02384 AB

2. Remove the four contactor securing fasteners.
3. Remove the contactor.

<Incorrect>

Attached sheet 4 (21/22)

CONTACTOR REMOVAL AND INSTALLATION

M1549405100042

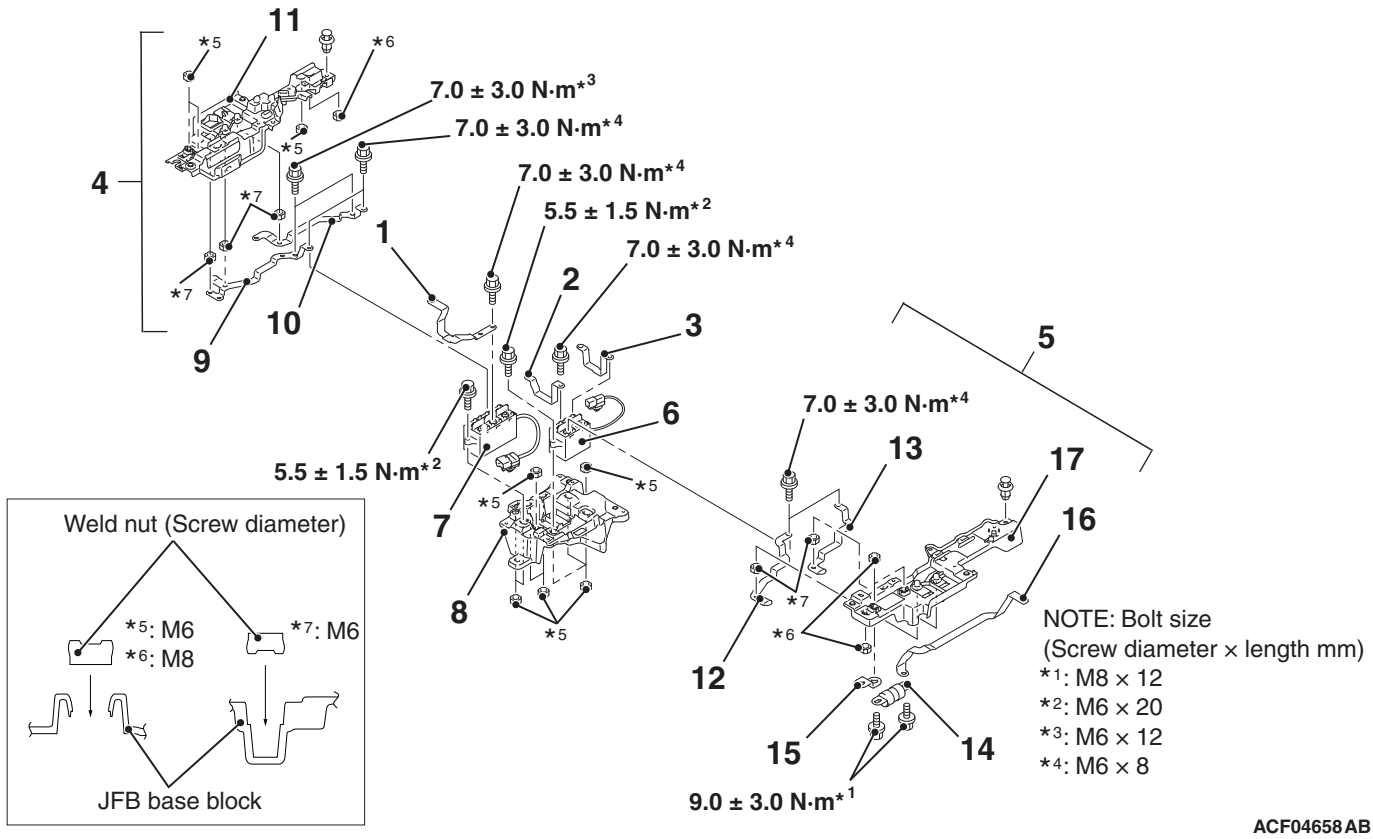

ACF04658AB

Removal steps

- Four-cell module connection (Refer to)

1. JFB bus bar
2. JFB bus bar I
3. JFB bus bar J
4. JB base block assembly (LH) connection
5. JB base block assemby (RH) connection
6. Contactor (2P)
7. Contactor (3P)

Removal steps (Continued)

8. JB centre base block assembly
9. JFB bus bar F
10. JFB bus bar G
11. JB base block assembly (LH)
12. JFB bus bar C
13. JFB bus bar B
14. High-voltage fuse
15. JFB bus bar E
16. JFB bus bar D
17. JB base block assembly (RH)

<Correct>

Attached sheet 4 (20/22)

14.Assemble the traction battery assembly, and perform the air leak check (Refer to P.54Dc-179). Then mount the battery to the vehicle.

15.Check the software version of the BMU and the CMU, and update if necessary.

INSPECTION

AIR LEAK CHECK

M1549405200050

Preparation for inspection

⚠ CAUTION

Set the special tool securely, or air leak may be caused.

1. Set the service plug cover (MB992928) to the service plug boot.

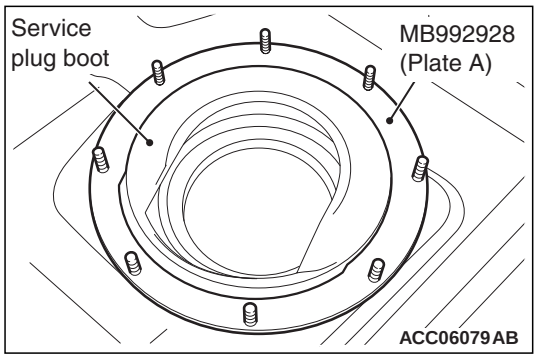

(1) Set the plate A of the service plug cover (MB992928) to the service plug boot.

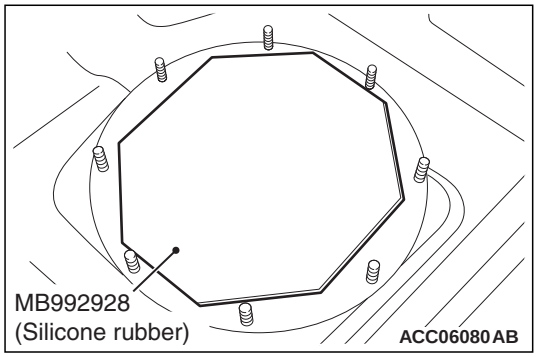

(2) Put the silicone rubber of the service plug cover (MB992928) on the service plug boot.

After Set the work hold lid, <Added>

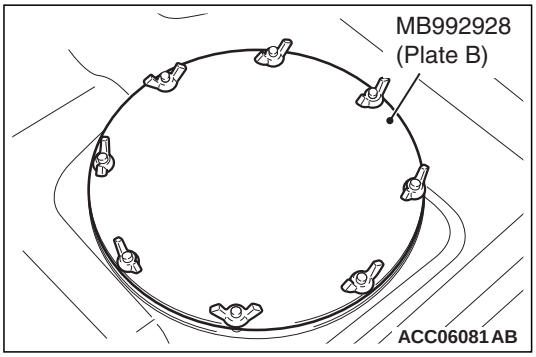

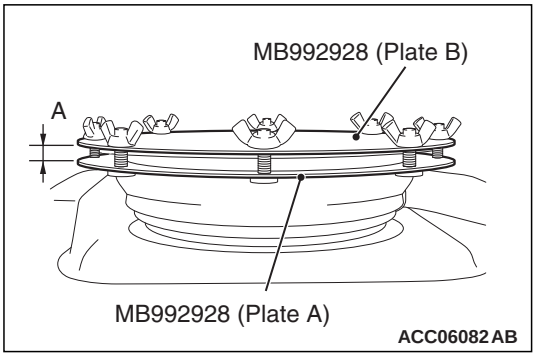

(3) Set the plate B of the service plug cover (MB992928). Tighten the screws so that the clearance (A) between the plates A and B is even.

2. Set the duct cover B (MB992933) to the cooling fan outlet.

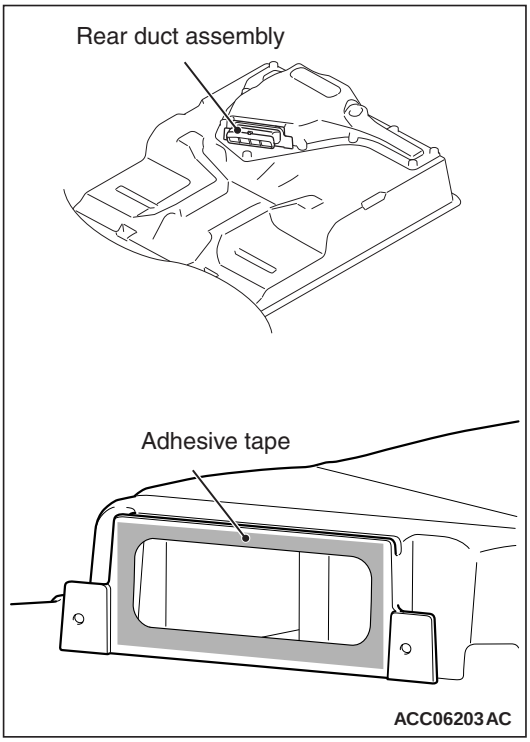

(1) Remove the rear duct assembly, and remove the adhesive tape from the traction battery side.