SERVICE BULLETIN

MITSUBISHI MOTORS

GLOBAL AFTER SALES OFFICE, MITSUBISHI MOTORS CORPORATION

PURPOSE : CHANGE	ISSUE NO. : MSB-15EXL12_17-001	DATE : 2015-05-27
SUBJECT : Omission of the mentions and changes in the maintenance points of the engine oil exchange		<DESTINATION/MODEL> (As per attached sheet 1) <M/Y> 12-16
GROUP : Gr:12(Lubrication) & 17(Emission control)		L200/SPORTERO/TRITON/STRADA/STRADA SPORTERO/NATIVA/PAJERO SPORT/MONTERO SPORT

1. Description :

Please refer to the attached document for the information about the change of mention in the applicable service manual.

2. Affected service manuals :

Please refer to the attached document (Attached sheet 1)

3. About the details :

Please refer to the attached document (Attached sheet 2-6)

Attached sheet 1 (1/3)

L200/SPORTERO/TRITON/STRADA/STRADA SPORTERO

< EU>

Applicable manual	Pub. No.	Applicable title (INFO ID)	Contents
2012 L200 Workshop Manual	CCRE12E1-CD (ENG) CCRF12E1-CD (FRE) CCRG12E1-CD (GER) CCRS12E1-CD (SPA) CCREI12E1-CD (ITA) RUSSIA:N/A	ENGINE OIL CHANGE (M121-00-103-60800-01)	Attached sheet 2
		FORCIBLE DPF REGENERATION (M175-00-680-22100-01)	Attached sheet 3
2013 L200 Workshop Manual	CKTE13E1-CD (ENG) CKTF13E1-CD (FRE) CKTG13E1-CD (GER) CKTS13E1-CD (SPA) CKTI13E1-CD (ITA) RUSSIA:N/A	ENGINE OIL CHANGE (M121-00-103-60800-01)	Attached sheet 2
		FORCIBLE DPF REGENERATION (M175-00-680-22100-01)	Attached sheet 3
2014 L200 Workshop Manual	CKTE14E1-CD (ENG) CKTF14E1-CD (FRE) CKTG14E1-CD (GER) CKTS14E1-CD (SPA) CKTI14E1-CD (ITA) RUSSIA:N/A	ENGINE OIL CHANGE (M121-00-103-60800-01)	Attached sheet 2
		FORCIBLE DPF REGENERATION (M175-00-680-22100-01)	Attached sheet 3
2015 L200 Workshop Manual	CKTE15E1-CD (ENG) CKTF15E1-CD (FRE) CKTG15E1-CD (GER) CKTS15E1-CD (SPA) CKTI15E1-CD (ITA) RUSSIA:N/A	ENGINE OIL CHANGE (M121-00-103-60801-01)	Attached sheet 2
		FORCIBLE DPF REGENERATION (M175-00-680-22100-01)	Attached sheet 3
2016 L200 Workshop Manual	CKTE16E1-CD(ENG) CKTF16E1-CD(FRE) CKTG16E1-CD(GER) CKTS16E1-CD(SPA) CKTI16E1-CD(ITA) RUSSIA:N/A	ENGINE OIL CHANGE (M121-00-103-91000-01)	Attached sheet 4
		FORCIBLE DPF REGENERATION (M175-00-680-32800-01)	Attached sheet 3

Attached sheet 1 (2/3)

<GENERAL EXP / GCC>

Applicable manual	Pub. No.	Applicable title (INFO ID)	Contents
2013 L200/SPORTERO/ TRITON/STRADA/ STRADA SPORTERO Workshop Manual	PWTE1208R (ENG) PWTS1209R (SPA)	Added below “CRANKSHAFT PULLEY REMOVAL AND INSTALLATION”(M112-00-164-97300-01)	Attached sheet 5
		FORCIBLE DPF REGENERATION (M175-00-680-24300-01)	Attached sheet 3
2014 L200/SPORTERO/ TRITON/STRADA/ STRADA SPORTERO Workshop Manual	PWTE1308R (ENG) PWTS1309R (SPA)	Added below “CRANKSHAFT PULLEY REMOVAL AND INSTALLATION”(M112-00-164-97300-01)	Attached sheet 5
		FORCIBLE DPF REGENERATION (M175-00-680-24300-01)	Attached sheet 3
2015 L200/SPORTERO/ TRITON/STRADA/ STRADA SPORTERO Workshop Manual	DRAFT	Added below “CRANKSHAFT PULLEY REMOVAL AND INSTALLATION”(M112-00-164-97300-01)	Attached sheet 5
		FORCIBLE DPF REGENERATION (M175-00-680-24300-01)	Attached sheet 3
2016 L200/SPORTERO/ TRITON/STRADA/ STRADA SPORTERO Workshop Manual	PWTE1502R (ENG) PWTS1503R (SPA)	ENGINE OIL CHANGE (M121-00-103-89100-01)	Attached sheet 6
		FORCIBLE DPF REGENERATION (M175-00-680-30600-01)	Attached sheet 3

< AUSTRALIA AND / NEW ZEALAND >

Applicable manual	Pub. No.	Applicable title (INFO ID)	Contents
2016 TRITON Workshop Manual	AU900436 AU900478 NZ:DRAFT	ENGINE OIL CHANGE (M121-00-103-89100-01)	Attached sheet 6
		FORCIBLE DPF REGENERATION (M175-00-680-30600-01)	Attached sheet 3

< THAILAND >

Applicable manual	Pub. No.	Applicable title (INFO ID)	Contents
2015 TRITON Workshop Manual	DRAFT	ENGINE OIL CHANGE (M121-00-103-89100-01)	Attached sheet 6
		FORCIBLE DPF REGENERATION (M175-00-680-30600-01)	Attached sheet 3

Attached sheet 1 (3/3)

NATIVA/PAJERO SPORT/MONTERO SPORT/ CHALLENGER

< GENERAL EXP >

Applicable manual	Pub. No.	Applicable title (INFO ID)	Contents
2013 NATIVA/PAJERO SPORT/MONTERO SPORT Workshop Manual	PWJE1211R(ENG) PWJS1212R(SPA)	Added below “CRANKSHAFT PULLEY REMOVAL AND INSTALLATION”(M112-00-164-97300-01)	Attached sheet 5
		FORCIBLE DPF REGENERATION (M175-00-680-26500-01)	Attached sheet 3
2014 NATIVA/PAJERO SPORT/MONTERO SPORT Workshop Manual	PWJE1310R(ENG) PWJS1311R(SPA)	Added below “CRANKSHAFT PULLEY REMOVAL AND INSTALLATION”(M112-00-164-97300-01)	Attached sheet 5
		FORCIBLE DPF REGENERATION (M175-00-680-26500-01)	Attached sheet 3

Attached sheet 2

<Added>

<Vehicles with diesel particulate filter (DPF)>

1. Start the engine and allow it to warm up until the temperature of the coolant reaches 80 °C to 90 °C.
2. Remove the engine oil filler cap.

⚠ WARNING
Use care as oil could be hot.

3. Remove the drain plug to drain oil.

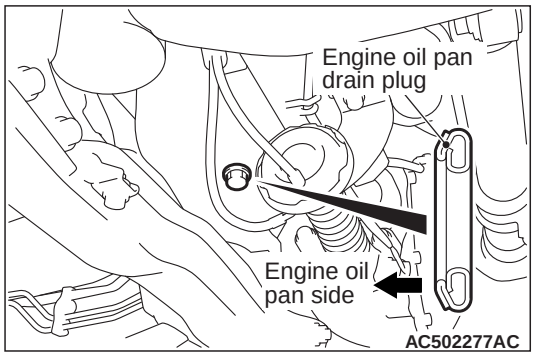

4. Install a new drain plug gasket so that it faces in the direction shown in the illustration, and then tighten the drain plug to the specified torque.

   Tightening torque: 39 ± 5 N·m

   NOTE: Install the drain plug gasket so it faces in the direction shown in the illustration.
5. Refill with specified quantity of oil.

   Specified Engine Oil
   - **ACEA classification: "For service C1, C2, C3 or C4"**
   - **JASO classification: "For service DL-1"**

   Total quantity (Includes volume inside oil filter and oil cooler):
   <2WD with 15 inch tyres> 7.4L
   <2WD with 16 inch tyres, 4WD> 6.4L

   NOTE:

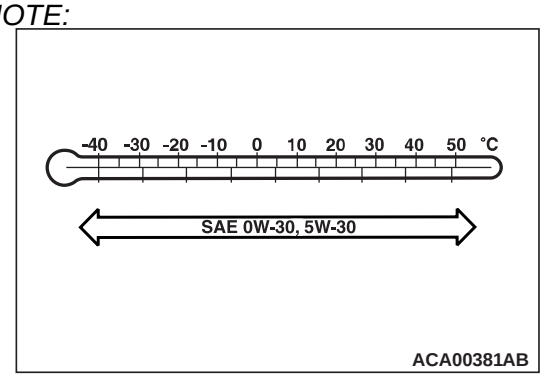

   Select engine oil of the proper SAE viscosity number according to the atmospheric temperature.
6. Install the engine oil filler cap.
7. Check oil level indicate below maximum marking.
8. Warm up engine for 10 minutes and wait for further 10 minutes.
9. Check that the oil level is between maximum marking and minimum marking.
10. If no, add the oil until the oil level gauge indicates between maximum marking and minimum marking.

ENGINE OIL FILTER REPLACEMENT

M1121001100703

1. Start the engine and allow it to warm up until the temperature of the coolant reaches 80 °C to 90 °C.
2. Remove the engine oil filler cap.

⚠ WARNING
Use care as oil could be hot.

3. Remove the drain plug to drain oil.
4. Remove the under cover.

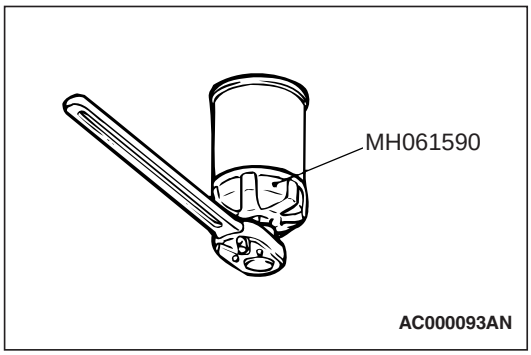

5. Use the special tool oil filter wrench (MH061590) to remove the engine oil filter.
6. Clean the filter bracket side mounting surface.

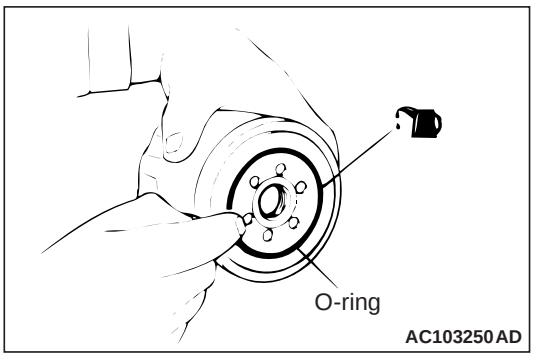

7. Apply a small amount of engine oil to the O-ring of the new oil filter.
8. Once the O-ring of the oil filter is touching the flange, use the special tool oil filter wrench (MH061590) to tighten to the specified torque.

   Tightening torque: Approximately 3/4 turn (22 ± 2 N·m)

FORCIBLE DPF REGENERATION

M1175006800221

⚠ WARNING

When the forcible DPF regeneration is carried out, confirm that no people or no combustible material is within its vicinity. If people or combustible material is around the muffler, serious injury or damage such as heat injury or fires may occur because high temperature exhaust gases are put out.

⚠ WARNING

Perform the forcible DPF regeneration in a well-ventilated and flat place when the vehicle is stopped (If perform the forcible DPF regeneration indoors, surely carry out enforced ventilation).

⚠ WARNING

If the engine warning lamp is lit, the DPF system might be abnormal. Carry out the inspection chart for diagnosis code, and then perform the forcible DPF regeneration (Refer to , GROUP 13 – Troubleshooting – Inspection Chart For Diagnosis codes). <Added>

NOTE: If white smoke or particular smell appear during the forcible DPF regenaration, this does not indicate an abnormality.

1. Set the vehicle to the pre-inspection condition.

⚠ CAUTION

Connection and disconnection of M.U.T.-III should be always performed with the ignition switch turned to the "LOCK" (OFF) position.

2. Connect the M.U.T.-III to the diagnosis connector.
3. Start the engine and let it run at idle.
4. From "FUNCTION MENU" on M.U.T.-III, select "SPECIAL FUNCTION".
5. From "SPECIAL FUNCTION", select "DPF REGENERATION".

⚠ CAUTION

If the forcible regeneration of the DPF is carried out while the accumulated amount of the PM in the DPF exceeds the limit, the forcible regeneration might not be correctly completed. This could be caused by the detection in the DPF system malfunction. Carry out the check procedure for the diagnosis code and solve the malfunction. (Refer to , GROUP 13 – Troubleshooting – Inspection Chart For Diagnosis Codes)

6. Perform Item No. 33, DPF Regeneration.

   NOTE: Carrying out the forcible DPF regeneration increases the engine speed 1,500 – 2,000 r/min (the temperature increases within the DPF and is maintained at approximately 600 ℃).

   NOTE: When performed for about 25 minutes, the forcible DPF regeneration automatically stops. Depressing the accelerator pedal during the regeneration, however, can cancel the forcible DPF regeneration.

   NOTE: If the DPF regeneration is carried out while the DPF lamp is illuminated or blinked due to the accumulated PM, the DPF lamp is turned off as soon as the forcible regeneration is correctly completed.

7. Turn the ignition switch to the "LOCK" (OFF) position and then remove the M.U.T.-III.

Attached sheet 4

<Vehicles with diesel particulate filter (DPF)>

1. Start the engine and allow it to warm up until the temperature of the coolant reaches 80 °C to 90 °C.
2. Remove the oil filler cap.
3. Remove the under skid plate and engine room under cover front (Refer to GROUP 51 – Under Cover).

⚠ WARNING

Use care as oil could be hot.

4. Remove the oil drain plug to drain oil.

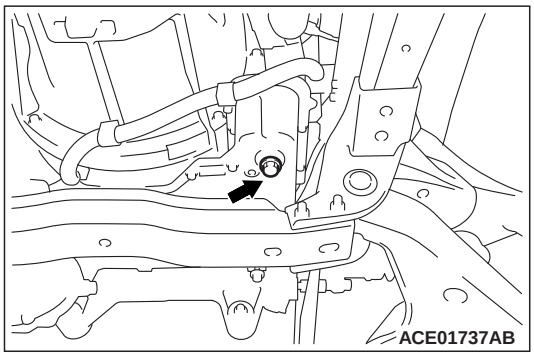

5. Install a new oil drain plug gasket, and then tighten the drain plug to the specified torque.

   Tightening torque: 39 ± 5 N·m

6. Install the under skid plate and engine room under cover front (Refer to GROUP 51 – Under Cover).
7. Refill with specified quantity of oil.

   Specified Engine Oil
   - **ACEA classification: "For service C1, C2, C3 or C4"**
   - **JASO classification: "For service DL-1"**

   Total quantity (Includes volume inside oil filter and oil cooler): 8.4L

NOTE:

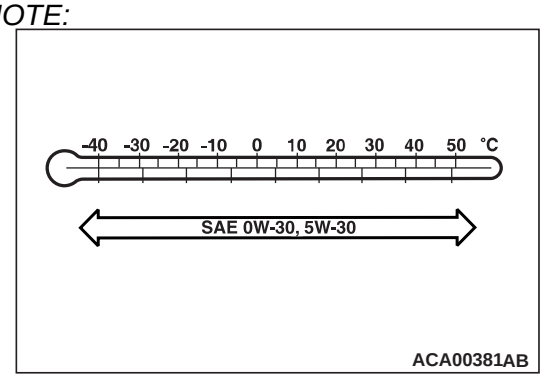

Select engine oil of the proper SAE viscosity number according to the atmospheric temperature.

8. Install the oil filler cap. <Added>
9. Check oil level indicate below maximum marking.
10. Warm up engine for 10 minutes and wait for further 10 minutes.
11. Check that the oil level is between maximum marking and minimum marking.
12. If no, add the oil until the oil level gauge indicates between maximum marking and minimum marking.

OIL FILTER REPLACEMENT

M1121001102516

1. Remove the oil drain plug to drain engine oil (Refer to).

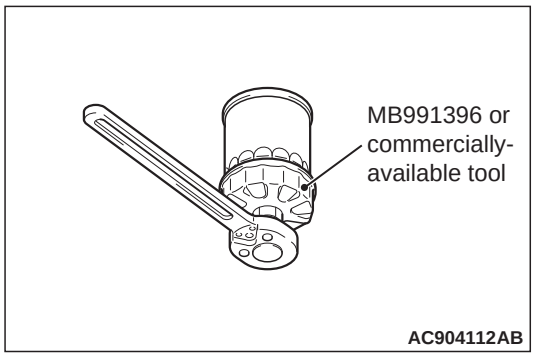

2. Use special tool oil filter wrench (MB991396) or commercially-available tool to remove the oil filter.
3. Clean the oil filter installing surface on the cylinder block side.

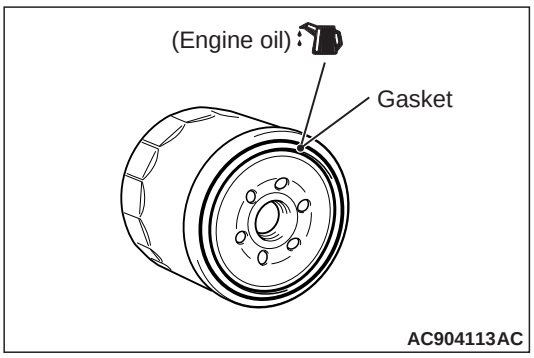

4. Apply a small amount of engine oil to the new oil filter gasket.
5. For the specified tightening torque, refer to the caution label attached on the oil filter.
6. Tighten the oil filter until the gasket contacts with the installation surface.
7. In the same manner as removal, use special tool oil filter wrench (MB991396) or commercially-available tool to tighten the oil filter to the specified torque.

Attached sheet 5(1/3)

GROUP 12

ENGINE LUBRICATION

CONTENTS

GENERAL INFORMATION 12-2

LUBRICANTS 12-2

ON-VEHICLE SERVICE 12-2

ENGINE OIL CHECK 12-2

ENGINE OIL CHANGE 12-3

Attached sheet 5(2/3)

GENERAL INFORMATION

M1121000102018

OUTLINE OF CHANGES

<Vehicles for General Export (4D5-DOHC)>
Due to the addition of models conforming to emission standard Euro5, a service procedure has been added. The service procedures other than below are the same as for the conventional vehicles with high power engine.

- Engine oil specification has been changed.
- Engine oil level gauge has been changed.

LUBRICANTS

M1121000403250

Item	Vehicles with DPF
Engine oil ACEA classification	C1, C2, C3 or C4
Engine oil API classification	–
Engine oil JASO classification	DL-1

ON-VEHICLE SERVICE

ENGINE OIL CHECK

M1121000901475

⚠ CAUTION

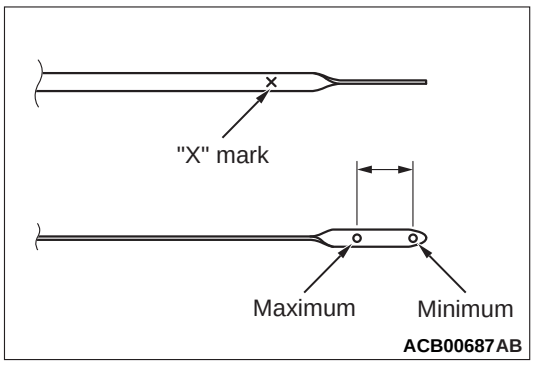

When burning away and removing soot accumulated in the DPF, fuel can mix with the engine oil and an increase in the engine oil level may occur. This does not indicate an abnormality. However, if the engine oil level is at or over the "X" mark on the engine oil level gauge, change the engine oil <Vehicles with diesel particulate filter (DPF)>.

1. Pull out the engine oil level gauge slowly and check that the engine oil level is in the illustrated range.
2. Check that the engine oil is not excessively dirty, that there is no engine coolant or fuel mixed in, and that it has sufficient viscosity.

Attached sheet 5(3/3)

ENGINE OIL CHANGE

M1121001003943

<Vehicles with diesel particulate filter (DPF)>

The service procedures other than below are the same as before.

1. Refill with specified quantity of oil.

   Specified Engine Oil
   - **ACEA classification: "For service C1, C2, C3 or C4"**
   - **JASO classification: "For service DL-1"**

   NOTE:

   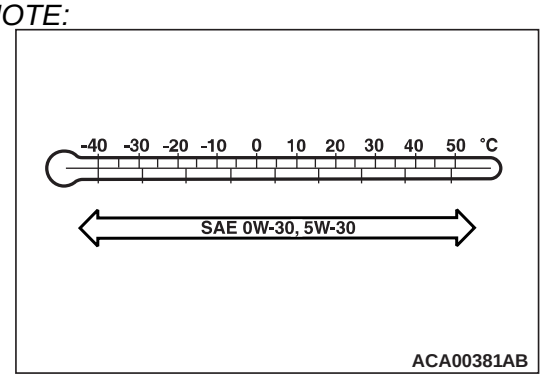

   Select engine oil of the proper SAE viscosity number according to the atmospheric temperature.
2. Install the engine oil filler cap.
3. Check oil level indicate below maximum marking.
4. Warm up engine for 10 minutes and wait for further 10 minutes.
5. Check that the oil level is between maximum marking and minimum marking.
6. If no, add the oil until the oil level gauge indicates between maximum marking and minimum marking.

Attached sheet 6

<4N1-Vehicles with diesel particulate filter (DPF)>

1. Start the engine and allow it to warm up until the temperature of the coolant reaches 80 °C to 90 °C.
2. Remove the oil filler cap.
3. Remove the under skid plate and engine room under cover front (Refer to GROUP 51 – Under Cover).

⚠ ***WARNING***

Use care as oil could be hot.

4. Remove the oil drain plug to drain oil.

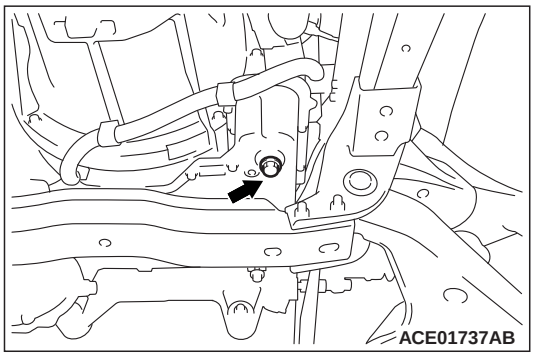

5. Install a new oil drain plug gasket, and then tighten the drain plug to the specified torque.

   Tightening torque: 39 ± 5 N·m

6. Install the under skid plate and engine room under cover front (Refer to GROUP 51 – Under Cover).
7. Refill with specified quantity of oil.

   Specified Engine Oil
   - **ACEA classification: "For service C1, C2, C3 or C4"**
   - **JASO classification: "For service DL-1"**

   Total quantity (Includes volume inside oil filter and oil cooler): 8.4L

<Added>

NOTE:

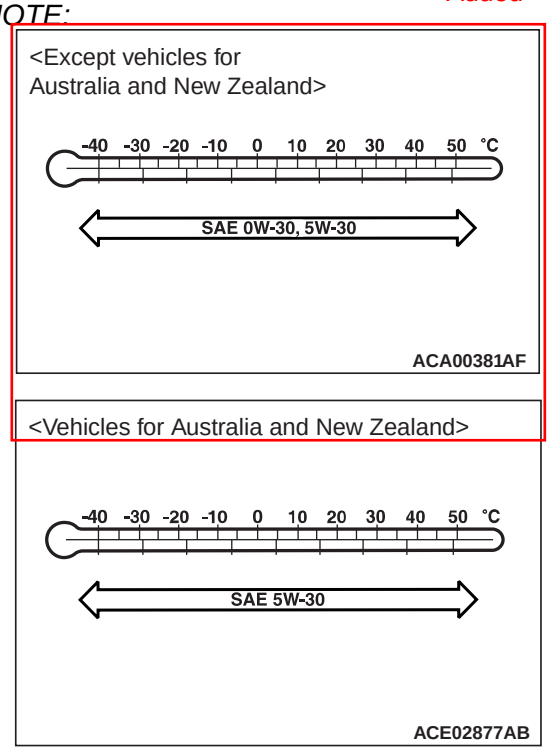

Select engine oil of the proper SAE viscosity number according to the atmospheric temperature.

8. Install the oil filler cap. <Added>
9. Check oil level indicate below maximum marking.
10. Warm up engine for 10 minutes and wait for further 10 minutes.
11. Check that the oil level is between maximum marking and minimum marking.
12. If no, add the oil until the oil level gauge indicates between maximum marking and minimum marking.

OIL FILTER REPLACEMENT

M1121001102497

<4G6>

1. Remove the oil drain plug to drain engine oil (Refer to).

