SERVICE BULLETIN

MITSUBISHI MOTORS

GLOBAL AFTER SALES OFFICE, MITSUBISHI MOTORS CORPORATION

PURPOSE : CORRECTION	ISSUE NO. : MSB-15EXL14-502A	DATE : 2015-12-07
SUBJECT : Error in writing of the exchange procedure of the coolant of 4N1, 4D5, 4G6 and 6B3 engines		<DESTINATION/MODEL> (AS per attached sheet 1) <M/Y> 15-16
GROUP : Gr:14(Cooling)		TRITON(KJ0T/KK0T/KL0T)/ PAJERO SPORT(KR0W/KS0W)

1. Description :

Please refer to the attached document for the correction of the error in writing existing in the applicable service manual. **The engines of 4D5, 4G6, and 6B3 have been added as the related engine newly in the revised A(MSB-15EXL14-502A)**

2. Affected service manuals :

Please refer to the attached document (Attached sheet 1)

3. About the details :

Please refer to the attached document (Attached sheets 2-6)

Revision history

		MSB No.	Issued Date	
Original		MSB-15EXL14-502	2015/11/3	
Revision	A	MSB-15EXL14-502A	2015/12/7	※This time

Attached sheet 1

Applicable manual	Pub. No.	Applicable title (INFO ID)	Contents
2015-2016 TRITON/L200/ L200 SPORTERO Workshop Manual	<THAILAND> DRAFT <AUSTRALIA/NEW ZEALAND> AU900436, AU900478 <GENERAL EXP> PWTE1502R (ENG) PWTS1503R (SPA)	ENGINE COOLANT CHANGE (M141-00-123-35801-01)	Attached sheet 2
2016 L200 Workshop Manual	<EU> CKTE16E1-CD(ENG) CKTF16E1-CD(FRE) CKTG16E1-CD(GER) CKTS16E1-CD(SPA) CKTI16E1-CD(ITA) <RUSSIA> N/A	ENGINE COOLANT CHANGE (M141-00-123-37000-01)	Attached sheet 3
2016 PAJERO SPORT Workshop Manual	<THAILAND> DRAFT N/A (RUSSIA) DRAFT(AUSTRALIA) DRAFT (NEW ZEALAND, DRAFT(SOUTH AFRICA/MEXICO)	ENGINE COOLANT CHANGE (M141-00-123-41100-01)	Attached sheet 4
2016 PAJERO SPORT/MONTERO SPORT Workshop Manual	<GENERAL EXP> PWJE1508R (ENG) PWJS1509R (SPA)	ENGINE COOLANT CHANGE <4D5> (M141-00-123-43300-01)	Attached sheet 5

ENGINE COOLANT CHANGE

1. Remove the under skid plate (Refer to GROUP 51 – Under Cover).

⚠ WARNING

When removing the radiator cap, use care to avoid contact with hot coolant or steam. Place a shop towel over the radiator cap and turn the radiator cap anti-clockwise a little to let the pressure escape through the vinyl tube. After relieving the steam pressure, remove the radiator cap by slowly turning it anti-clockwise.

2. Drain the engine coolant from the radiator, heater core and engine after unplugging the radiator drain plug and removing the radiator cap.
3. Securely tighten the drain plug of the radiator.
4. Disconnect water hose I from the engine oil cooler, and then drain the engine coolant from the engine (Refer to GROUP 12 – Engine Oil Cooler).
5. Remove the thermostat, and then drain the engine coolant from the engine (Refer to GROUP 14 – Thermostat).
6. Remove the headlamp assembly RH (Refer to GROUP 54A – Headlamp).
7. Remove the condenser tank assembly and drain the coolant.
8. Reinstall the condenser tank assembly.
9. Install the headlamp assembly RH (Refer to GROUP 54A – Headlamp).

⚠ CAUTION

- **Do not use alcohol or methanol anti-freeze or any engine coolants mixed with alcohol or methanol anti-freeze. The use of an improper anti-freeze can cause corrosion of the aluminium components.**
- **Use the MITSUBISHI MOTORS GENUINE SUPER LONG LIFE COOLANT PREMIUM without adding water because the concentration is preadjusted to 50%.**

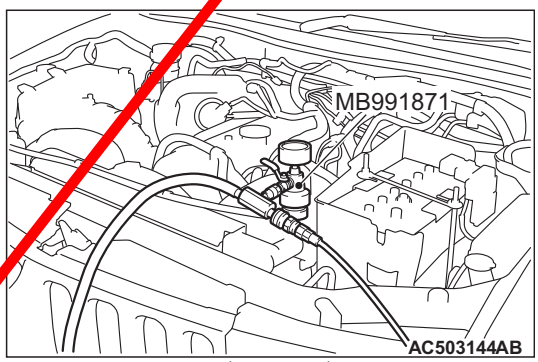

10. Use special tool LLC changer (MB991871) to refill the engine coolant up to the top of the radiator port.

    Recommended antifreeze: MITSUBISHI MOTORS GENUINE SUPER LONG LIFE COOLANT PREMIUM or equivalent*

    NOTE: *similar high quality ethylene glycol based non-silicate, non-amine, non-nitrate and non-borate coolant with long life hybrid organic acid technology

    Quantity (Includes volume inside condense tank): 7.7 L

    NOTE: For how to use special tool MB991871, refer to its manufacturer's instructions.
11. Reinstall the radiator cap.
12. Start the engine and let it warm up until the thermostat opens.
13. After repeatedly revving the engine up to 3,000 r/min several times, then stop the engine.
14. Remove the radiator cap after the engine has become cold, and pour in coolant up to the brim. Reinstall the cap.

⚠ CAUTION

Do not overfill the condenser tank.

15. Add engine coolant to the condenser tank between the "F" and "L" mark if necessary.
16. Install the under skid plate (Refer to GROUP 51 – Under Cover).

<Old>

<New>

2. Remove the radiator drain plug to drain the engine coolant.
3. Securely tighten the drain plug of the radiator.
4. Disconnect water hose I from the engine oil cooler. (Refer to GROUP 12 – Engine Oil Cooler).
5. Air-blow the system to drain the engine coolant through the radiator cap.
6. Connect water hose I from the engine oil cooler.
7. Remove the thermostat. (Refer to GROUP 14 – Thermostat).
8. Air-blow the system to drain the engine coolant through the radiator cap.

9-1. Install the thermostat.

9-2. Disconnect the radiator condenser tank hose the radiator.

9-3. Suspend the radiator condenser tank hose downwards to drain the tank.

9-4. Connect the radiator condenser tank hose.

Attached sheet 2 (1/3)

RADIATOR CAP VALVE OPENING PRESSURE CHECK

M1141001301489

NOTE: Be sure that the cap is clean before testing. Rust or other foreign material on the cap seal will cause an improper reading.

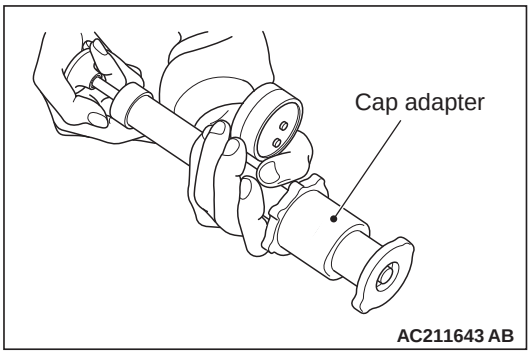

1. Use a cap adapter to attach the cap to the tester.
2. Increase the pressure until the indicator of the gauge stops moving.

   Limit:
   <4G6> Minimum 83 kPa
   <4D5, 4N1> Minimum 102 kPa
   Standard value:
   <4G6> 93 – 123 kPa
   <4D5, 4N1> 112 – 142 kPa
3. Replace the radiator cap if the reading does not remain at or above the limit.

ENGINE COOLANT CHANGE

M1141001203358

<4G6>

1. Remove the under skid plate and engine room under cover front (Refer to GROUP 51 – Under Cover).

⚠ WARNING
When removing the radiator cap, use care to avoid contact with hot coolant or steam. Place a shop towel over the radiator cap and turn the radiator cap anti-clockwise a little to let the pressure escape through the vinyl tube. After relieving the steam pressure, remove the radiator cap by slowly turning it anti-clockwise.

<Old>

2. Drain the engine coolant from the radiator, heater core and engine after unplugging the radiator plug and removing the radiator cap.

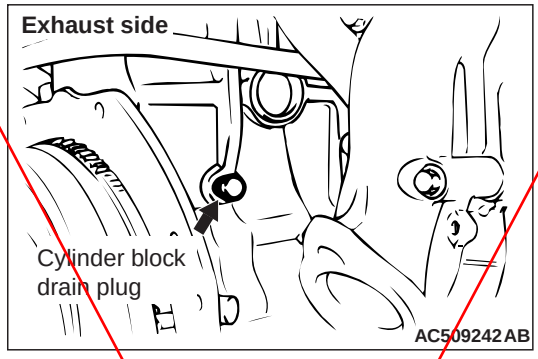

3. Drain the engine coolant in the water jacket by unplugging the cylinder block drain plug.
4. Remove the condenser tank and drain the coolant.
5. Drain the engine coolant then clean the path of the engine coolant by injecting water into the radiator from the radiator cap area.

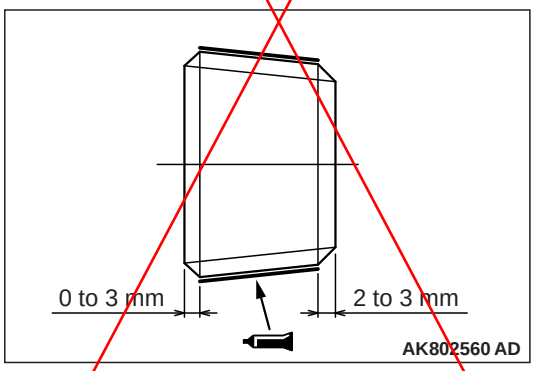

6. Apply the designated sealant to the screw area of the cylinder block drain plug, and then tighten to the specified torque.

   Specified sealant: ThreeBond 2471 or equivalent
   Tightening torque: 44 ± 5 N·m
7. Securely tighten the radiator plug.
8. Reinstall the radiator condenser tank assembly.

<Old>

<New> From attached sheet 6

⚠ CAUTION
Do not use alcohol or methanol anti-freeze or any engine coolants mixed with alcohol or methanol anti-freeze. The use of an improper anti-freeze can cause corrosion of the aluminium components.

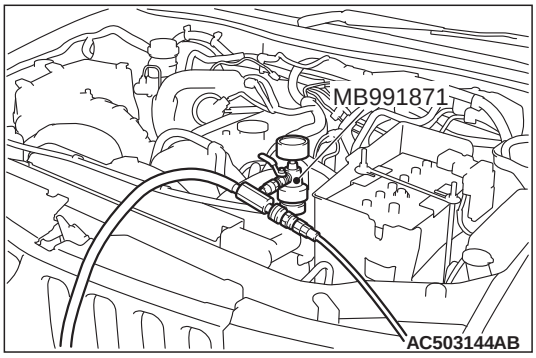

9. Use special tool LLC changer (MB991871) to refill the engine coolant up to the top of the radiator port.
   Recommended antifreeze: MITSUBISHI MOTORS GENUINE SUPER LONG LIFE COOLANT or equivalent
   Quantity (Includes volume inside condense tank): 7.5 L
   NOTE: For how to use special tool (MB991871), refer to its manufacturer's instructions.
10. Reinstall the radiator cap.
11. Start the engine and let it warm up until the thermostat opens.
12. After repeatedly revving the engine up to 3,000 r/min several times, then stop the engine.
13. Remove the radiator cap after the engine has become cold, and pour in coolant up to the brim. Reinstall the radiator cap.

⚠ CAUTION
Do not overfill the condenser tank.

14. Add coolant to the radiator condenser tank assembly between the "F" and "L" mark if necessary.
15. Install the under skid plate and engine room under cover front (Refer to GROUP 51 – Under Cover).

<New> From attached sheet 6

<4D5>

1. Remove the under skid plate and engine room under cover front (Refer to GROUP 51 – Under Cover).

⚠ *WARNING*
When removing the radiator cap, use care to avoid contact with hot coolant or steam. Place a shop towel over the cap and turn the cap anti-clockwise a little to let the pressure escape through the vinyl tube. After relieving the steam pressure, remove the cap by slowly turning it anti-clockwise.

<Old>

2. Drain the engine coolant from the radiator, heater core and engine after unplugging the radiator drain plug and removing the radiator cap.

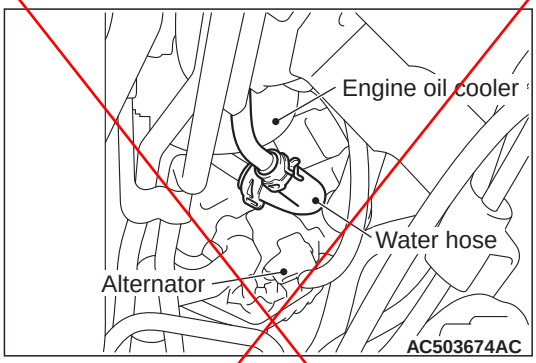

3. Drain the engine coolant in the water jacket by disconnect the engine oil cooler water hose.
4. Remove the condenser tank and drain the engine coolant.
5. Drain the engine coolant then clean the path of the engine coolant by injecting water into the radiator from the radiator cap area.
6. Connect the engine oil cooler water hose.
7. Securely tighten the drain plug of the radiator.
8. Reinstall the condenser tank.

⚠ CAUTION
Do not use alcohol or methanol anti-freeze or any engine coolants mixed with alcohol or methanol anti-freeze. The use of an improper anti-freeze can cause corrosion of the aluminium components.

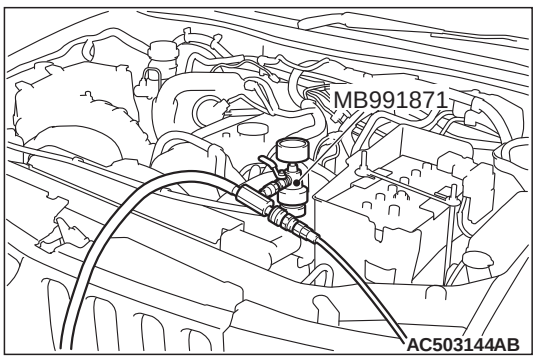

Attached sheet 2 (3/3)

9. Use special tool LLC changer (MB991871) to refill the engine coolant up to the top of the radiator port. <Old>

Recommended antifreeze: MITSUBISHI MOTORS GENUINE SUPER LONG LIFE COOLANT or equivalent
Quantity (Includes volume inside condense tank): 8.2 L

NOTE: For how to use special tool MB991871, refer to its manufacturer's instructions.

10. Reinstall the radiator cap.
11. Start the engine and let it warm up until the thermostat opens.
12. After repeatedly revving the engine up to 3,000 r/min several times, then stop the engine.
13. Remove the radiator cap after the engine has become cold, and pour in coolant up to the brim. Reinstall the cap.

⚠ CAUTION
Do not overfill the condenser tank.

14. Add engine coolant to the condenser tank between the "F" and "L" mark if necessary.
15. Install the under skid plate and engine room under cover front (Refer to GROUP 51 – Under Cover).

<4N1>

1. Remove the under skid plate and engine room under cover front (Refer to GROUP 51 – Under Cover).

⚠ WARNING
When removing the radiator cap, use care to avoid contact with hot coolant or steam. Place a shop towel over the cap and turn the cap anti-clockwise a little to let the pressure escape through the vinyl tube. After relieving the steam pressure, remove the cap by slowly turning it anti-clockwise. <Old>

2. Drain the engine coolant from the radiator, heater core and engine after unplugging the radiator drain plug and removing the radiator cap.
3. Securely tighten the drain plug of the radiator.
4. Disconnect water hose I from the engine oil cooler, and then drain the engine coolant from the engine (Refer to GROUP 12 – Engine Oil Cooler).
5. Remove the thermostat, and then drain the engine coolant from the engine (Refer to GROUP 14 – Thermostat P.14-17).
6. Remove the condenser tank and drain the engine coolant.
7. Reinstall the condenser tank.

⚠ CAUTION

- **Do not use alcohol or methanol anti-freeze or any engine coolants mixed with alcohol or methanol anti-freeze. The use of an improper anti-freeze can cause corrosion of the aluminium components.**
- **Use the MITSUBISHI MOTORS GENUINE SUPER LONG LIFE COOLANT PREMIUM without adding water because the concentration is preadjusted to 50%.**

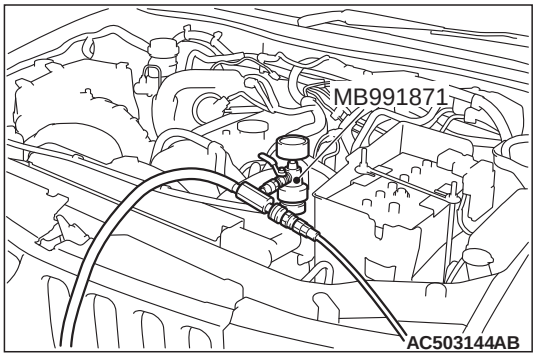

8. Use special tool LLC changer (MB991871) to refill the engine coolant up to the top of the radiator port.

Recommended antifreeze: MITSUBISHI MOTORS GENUINE SUPER LONG LIFE COOLANT PREMIUM or equivalent*

NOTE: *similar high quality ethylene glycol based non-silicate, non-amine, non-nitrate and non-borate coolant with long life hybrid organic acid technology
Quantity (Includes volume inside condense tank): 7.7 L

NOTE: For how to use special tool MB991871, refer to its manufacturer's instructions.

9. Reinstall the radiator cap.
10. Start the engine and let it warm up until the thermostat opens.
11. After repeatedly revving the engine up to 3,000 r/min several times, then stop the engine.
12. Remove the radiator cap after the engine has become cold, and pour in coolant up to the brim. Reinstall the cap.

⚠ CAUTION
Do not overfill the condenser tank.

13. Add engine coolant to the condenser tank between the "F" and "L" mark if necessary. <New>

From attached sheet 6

⚠ ***WARNING***

When removing the radiator cap, use care to avoid contact with hot coolant or steam. Place a shop towel over the cap and turn the cap anti-clockwise a little to let the pressure escape through the vinyl tube. After relieving the steam pressure, remove the cap by slowly turning it anti-clockwise.

<Old>

2. Drain the engine coolant from the radiator, heater core and engine after unplugging the radiator drain plug and removing the radiator cap.
3. Securely tighten the drain plug of the radiator.
4. Disconnect water hose I from the engine oil cooler, and then drain the engine coolant from the engine (Refer to GROUP 12 – Engine Oil Cooler).
5. Remove the thermostat, and then drain the engine coolant from the engine (Refer to GROUP 14 – Thermostat P.14-7).
6. Remove the condenser tank and drain the engine coolant.
7. Reinstall the condenser tank.

⚠ **CAUTION**

- **Do not use alcohol or methanol anti-freeze or any engine coolants mixed with alcohol or methanol anti-freeze. The use of an improper anti-freeze can cause corrosion of the aluminium components.**
- **Use the MITSUBISHI MOTORS GENUINE SUPER LONG LIFE COOLANT PREMIUM without adding water because the concentration is preadjusted to 50%.**

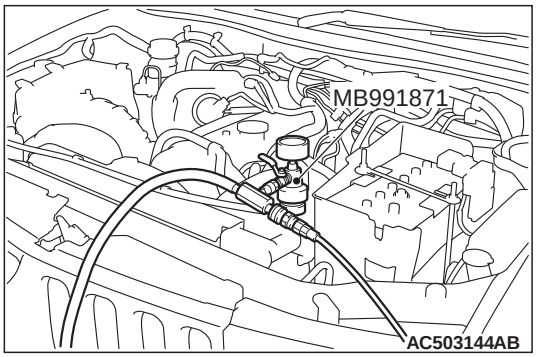

8. Use special tool LLC changer (MB991871) to refill the engine coolant up to the top of the radiator port.

   Recommended antifreeze: MITSUBISHI MOTORS GENUINE SUPER LONG LIFE COOLANT PREMIUM or equivalent*

   NOTE: *similar high quality ethylene glycol based non-silicate, non-amine, non-nitrate and non-borate coolant with long life hybrid organic acid technology

   Quantity (Includes volume inside condense tank): 7.7 L

   NOTE: For how to use special tool MB991871, refer to its manufacturer's instructions.
9. Reinstall the radiator cap.
10. Start the engine and let it warm up until the thermostat opens.
11. After repeatedly revving the engine up to 3,000 r/min several times, then stop the engine.
12. Remove the radiator cap after the engine has become cold, and pour in coolant up to the brim. Reinstall the cap.

⚠ **CAUTION**

Do not overfill the condenser tank.

13. Add engine coolant to the condenser tank between the "F" and "L" mark if necessary.
14. Install the under skid plate and engine room under cover front (Refer to GROUP 51 – Under Cover).

From attached sheet 6 <New>

ENGINE COOLANT CHECK

M1141000900311

1. Check that the coolant level in the condenser tank is between "F" and "L".
2. Check that the coolant is not contaminated with oil and others.

⚠ **CAUTION**

If antifreeze concentration exceeds 60%, frost protection is reduced again and cooling efficiency is also impaired, affecting the engine adversely.

3. Check the antifreeze concentration if necessary.

Ambient temperature (minimum)°C	Antifreeze concentration %
–15	50
–20	
–25	
–30	
–35	
–50	60

Attached sheet 4 (1/3)

RADIATOR CAP VALVE OPENING PRESSURE CHECK

<Old>

M1141001301564

NOTE: Be sure that the cap is clean before testing. Rust or other foreign material on the cap seal will cause an improper reading.

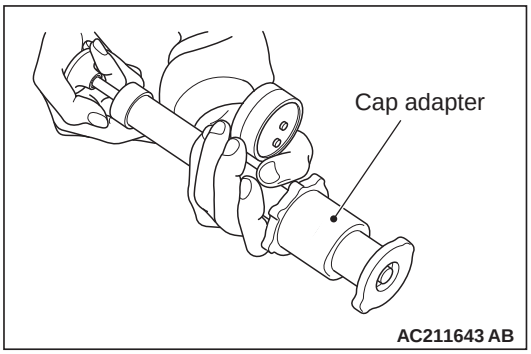

1. Use a cap adapter to attach the cap to the tester.
2. Increase the pressure until the indicator of the gauge stops moving.

   Limit:

   <4G6, 6B3> Minimum 83 kPa

   <4N1> Minimum 102 kPa

   Standard value:

   <4G6, 6B3> 93 – 123 kPa

   <4N1> 112 – 142 kPa
3. Replace the radiator cap if the reading does not remain at or above the limit.

ENGINE COOLANT CHANGE

M1141001203411

<4G6>

1. Remove the under skid plate (Refer to GROUP 51 – Under Cover).

⚠ *WARNING*

When removing the radiator cap, use care to avoid contact with hot coolant or steam. Place a shop towel over the radiator cap and turn the radiator cap anti-clockwise a little to let the pressure escape through the vinyl tube. After relieving the steam pressure, remove the radiator cap by slowly turning it anti-clockwise.

<Old>

2. Drain the engine coolant from the radiator, heater core and engine after unplugging the radiator plug and removing the radiator cap.

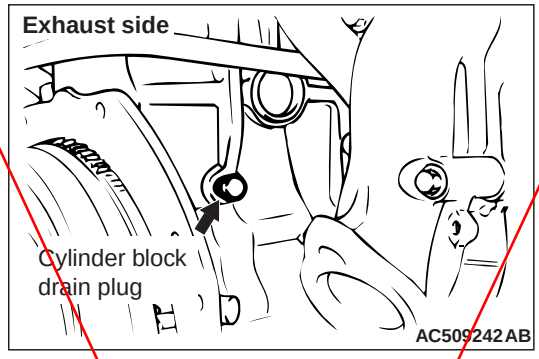

3. Drain the engine coolant in the water jacket by unplugging the cylinder block drain plug.
4. Remove the headlamp assembly RH (Refer to GROUP 54A – Headlamp).
5. Remove the condenser tank assembly and drain the coolant.
6. Reinstall the condenser tank assembly.
7. Install the headlamp assembly RH (Refer to GROUP 54A – Headlamp).
8. Drain the engine coolant then clean the path of the engine coolant by injecting water into the radiator from the radiator cap area.

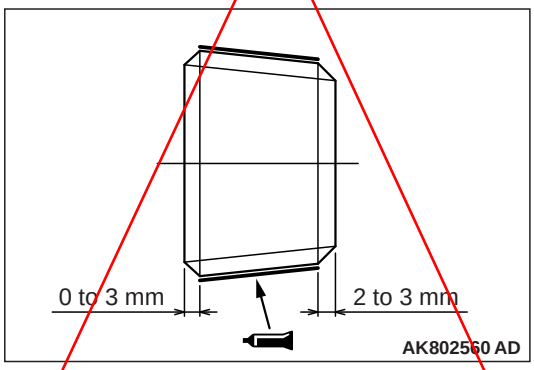

9. Apply the designated sealant to the screw area of the cylinder block drain plug, and then tighten to the specified torque.

   Specified sealant: ThreeBond 2471 or equivalent

   Tightening torque: 44 ± 5 N·m
10. Securely tighten the radiator plug.

<New>

From attached sheet 6

⚠ CAUTION
Do not use alcohol or methanol anti-freeze or any engine coolants mixed with alcohol or methanol anti-freeze. The use of an improper anti-freeze can cause corrosion of the aluminium components.

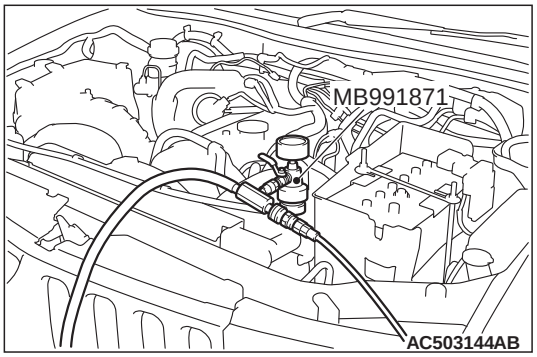

11. Use special tool LLC changer (MB991871) to refill the engine coolant up to the top of the radiator port.
    Recommended antifreeze: MITSUBISHI MOTORS GENUINE SUPER LONG LIFE COOLANT or equivalent
    Quantity (Includes volume inside condense tank): 7.5 L
    NOTE: For how to use special tool (MB991871), refer to its manufacturer's instructions.
12. Reinstall the radiator cap.
13. Start the engine and let it warm up until the thermostat opens.
14. After repeatedly revving the engine up to 3,000 r/min several times, then stop the engine.
15. Remove the radiator cap after the engine has become cold, and pour in coolant up to the brim. Reinstall the radiator cap.

⚠ CAUTION
Do not overfill the condenser tank.

16. Add coolant to the radiator condenser tank assembly between the "F" and "L" mark if necessary.
17. Install the under skid plate (Refer to GROUP 51 – Under Cover).

<6B3>

1. Remove the under skid plate (Refer to GROUP 51 – Under Cover).
2. Remove the air cleaner assembly (Refer to GROUP 15 – Air Cleaner) <4WD>.

<New> From attached sheet 6

⚠ *WARNING*
When removing the radiator cap, use care to avoid contact with hot coolant or steam. Place a shop towel over the radiator cap and turn the radiator cap anti-clockwise a little to let the pressure escape through the vinyl tube. After relieving the steam pressure, remove the radiator cap by slowly turning it anti-clockwise.

<Old>

3. Drain the engine coolant from the radiator, heater core and engine after unplugging the radiator drain plug and removing the radiator cap.
4. Securely tighten the drain plug of the radiator.

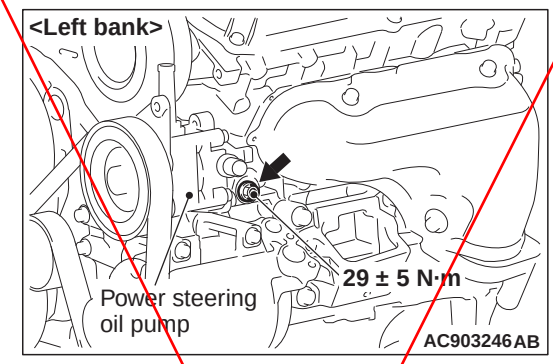

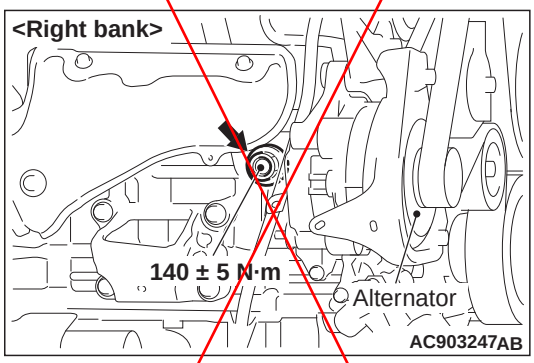

5. Drain the engine coolant in the water jacket by unplugging the cylinder block drain plug.
6. Remove the headlamp assembly RH (Refer to GROUP 54A – Headlamp).
7. Remove the condenser tank assembly and drain the coolant.
8. Reinstall the condenser tank assembly.
9. Install the headlamp assembly RH (Refer to GROUP 54A – Headlamp).
10. Install the cylinder block drain plug and new gasket, and then tighten the cylinder block drain plug to the specified torque.
    Tightening torque:
    <Left bank> 29 ± 5 N·m
    <Right bank> 140 ± 5 N·m

Attached sheet 4 (3/3)

⚠ CAUTION

- **Do not use alcohol or methanol anti-freeze or any engine coolants mixed with alcohol or methanol anti-freeze. The use of an improper anti-freeze can cause corrosion of the aluminium components.**
- **Use the MITSUBISHI MOTORS GENUINE SUPER LONG LIFE COOLANT PREMIUM without adding water because the concentration is preadjusted to 50%.**

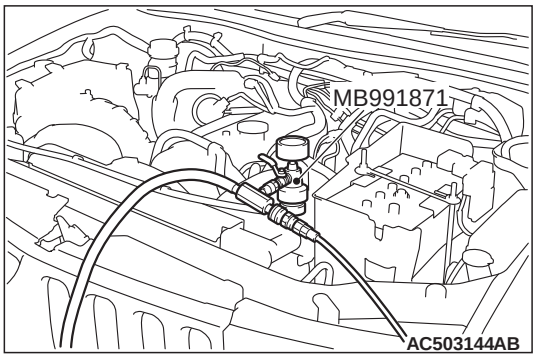

11. Use special tool LLC changer (MB991871) to refill the engine coolant up to the top of the radiator port.

    Recommended antifreeze: MITSUBISHI MOTORS GENUINE SUPER LONG LIFE COOLANT PREMIUM or equivalent*

    NOTE: *similar high quality ethylene glycol based non-silicate, non-amine, non-nitrate and non-borate coolant with long life hybrid organic acid technology

    Quantity (Includes volume inside condense tank): 9.0 L

    NOTE: For how to use special tool MB991871, refer to its manufacturer's instructions.

12. Reinstall the radiator cap.
13. Start the engine and let it warm up until the thermostat opens.
14. After repeatedly revving the engine up to 3,000 r/min several times, then stop the engine.
15. Remove the radiator cap after the engine has become cold, and pour in coolant up to the brim. Reinstall the cap.

⚠ CAUTION

Do not overfill the condenser tank.

16. Add engine coolant to the condenser tank between the "F" and "L" mark if necessary.
17. Install the air cleaner assembly (Refer to GROUP 15 – Air Cleaner) <4WD>.
18. Install the under skid plate (Refer to GROUP 51 – Under Cover).

<4N1>

1. Remove the under skid plate (Refer to GROUP 51 – Under Cover).

⚠ WARNING

When removing the radiator cap, use care to avoid contact with hot coolant or steam. Place a shop towel over the radiator cap and turn the radiator cap anti-clockwise a little to let the pressure escape through the vinyl tube. After relieving the steam pressure, remove the radiator cap by slowly turning it anti-clockwise.

<Old>

2. Remove the radiator drain plug to drain the engine coolant.
3. Securely tighten the drain plug of the radiator.
4. Disconnect water hose I from the engine oil cooler. (Refer to GROUP 12 – Engine Oil Cooler).
5. Air-blow the system to drain the engine coolant through the radiator cap.
6. Connect water hose I from the engine oil cooler.
7. Remove the thermostat. (Refer to GROUP 14 – Thermostat).
8. Air-blow the system to drain the engine coolant through the radiator cap.
9. Install the thermostat).
10. Disconnect the radiator condenser tank hose the radiator.
11. Suspend the radiator condenser tank hose downwards to drain the tank.
12. Connect the radiator condenser tank hose.

<New> From attached sheet 6

SPECIAL TOOLS

M1141000601874

Tool	Number	Name	Use
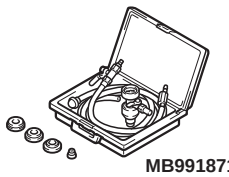 MB991871	MB991871	LLC changer	Coolant refilling
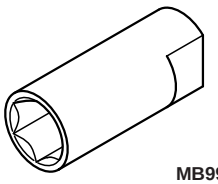 MB992042	MB992042	Engine coolant temperature sensor wrench	Removal and installation of the engine coolant temperature sensor

ON-VEHICLE SERVICE

RADIATOR CAP VALVE OPENING PRESSURE CHECK <6B3, 4D5>

M1141001301575

NOTE: Be sure that the cap is clean before testing. Rust or other foreign material on the cap seal will cause an improper reading.

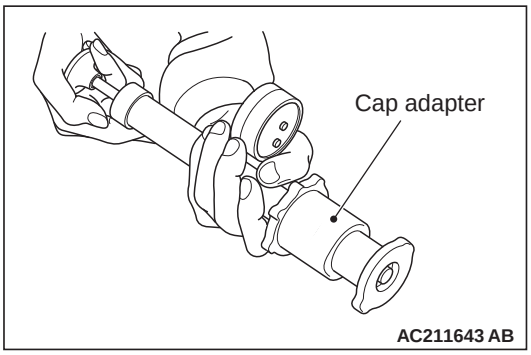

1. Use a cap adapter to attach the cap to the tester.
2. Increase the pressure until the indicator of the gauge stops moving.

<6B3>
Limit:
<Part No. MR597126> Minimum 83 kPa
<Part No. 1350A920> Minimum 102 kPa
Standard value:
<Part No. MR597126> 93 – 123 kPa
<Part No. 1350A920> 112 – 142 kPa

<4D5>
Limit: Minimum 102 kPa
Standard value: 112 – 142 kPa

3. Replace the radiator cap if the reading does not remain at or above the limit.

ENGINE COOLANT CHANGE <4D5>

M1141001203433

1. Remove the under skid plate.

⚠ *WARNING*
When removing the radiator cap, use care to avoid contact with hot coolant or steam. Place a shop towel over the cap and turn the cap anti-clockwise a little to let the pressure escape through the vinyl tube. After relieving the steam pressure, remove the cap by slowly turning it anti-clockwise.

<Old>

2. Drain the engine coolant from the radiator, heater core and engine after unplugging the radiator drain plug and removing the radiator cap.

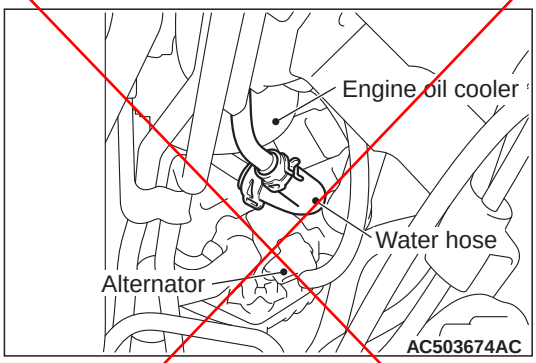

3. Drain the engine coolant in the water jacket by disconnect the engine oil cooler water hose.
4. Remove the headlamp assembly RH.
5. Remove the condenser tank assembly and drain the engine coolant.
6. Reinstall the condenser tank assembly.

7. Install the headlamp assembly RH.
8. Drain the engine coolant then clean the path of the engine coolant by injecting water into the radiator from the radiator cap area.
9. Connect the engine oil cooler water hose.
10. Securely tighten the drain plug of the radiator.

⚠ CAUTION

Do not use alcohol or methanol anti-freeze or any engine coolants mixed with alcohol or methanol anti-freeze. The use of an improper anti-freeze can cause corrosion of the aluminium components.

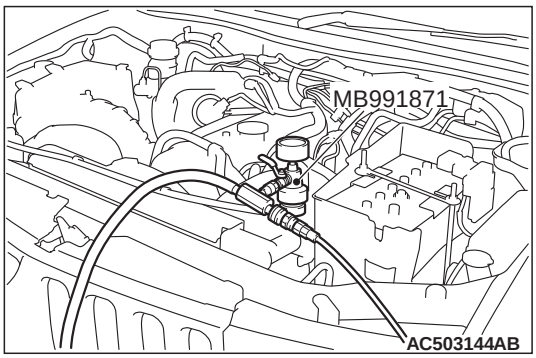

11. Use special tool LLC changer (MB991871) to refill the engine coolant up to the top of the radiator port.

    Recommended antifreeze: MITSUBISHI MOTORS GENUINE SUPER LONG LIFE COOLANT or equivalent

    Quantity (Includes volume inside condense tank): 8.2 L

    NOTE: For how to use special tool MB991871, refer to its manufacturer's instructions.
12. Reinstall the radiator cap.
13. Start the engine and let it warm up until the thermostat opens.
14. After repeatedly revving the engine up to 3,000 r/min several times, then stop the engine.
15. Remove the radiator cap after the engine has become cold, and pour in coolant up to the brim. Reinstall the cap.

⚠ CAUTION

Do not overfill the condenser tank.

16. Add engine coolant to the condenser tank between the "F" and "L" mark if necessary.
17. Install the under skid plate.

ENGINE COOLANT CHECK <4D5>

M1141000900333

1. Check that the coolant level in the condenser tank is between "F" and "L".
2. Check that the coolant is not contaminated with oil and others.

⚠ CAUTION

If antifreeze concentration exceeds 60%, frost protection is reduced again and cooling efficiency is also impaired, affecting the engine adversely.

3. Check the antifreeze concentration if necessary.

Ambient temperature (minimum)°C	Antifreeze concentration %
–15	50
–20	
–25	
–30	
–35	
–50	60

2. Remove the radiator drain plug to drain the engine coolant.
3. Securely tighten the drain plug of the radiator.
4. Disconnect water hose I from the engine oil cooler. (Refer to GROUP 12 – Engine Oil Cooler).
5. Air-blow the system to drain the engine coolant through the radiator cap.
6. Connect water hose I from the engine oil cooler.
7. Remove the thermostat. (Refer to GROUP 14 – Thermostat).
8. Air-blow the system to drain the engine coolant through the radiator cap.
9. Install the thermostat.
10. Disconnect the radiator condenser tank hose the radiator.
11. Suspend the radiator condenser tank hose downwards to drain the tank.
12. Connect the radiator condenser tank hose.