SERVICE BULLETIN

MITSUBISHI MOTORS

GLOBAL AFTER SALES OFFICE, MITSUBISHI MOTORS CORPORATION

PURPOSE : CHANGE	ISSUE NO. : MSB-15EXL22-003	DATE : 2015-09-08
SUBJECT : Changes of the component of the transfer		<DESTINATION/MODEL> (EU/RUSSIA/G.EXP/GCC/MMAL/NZ/THAILAND) L200/SPORTERO/TRITON/STRADA/STRADA SPORTERO (KJ0T/KL0T/KK0T) <M/Y> 15-16
GROUP : Gr:22(Manual transmission)		

1. Description :

Please refer to the attached document for the information about the change of mention in the applicable service manual. The supply of service parts(o-ring) will be started.

2. Affected service manuals :

Destination	Applicable manual	Pub. No.	Applicable title (INFO ID)
THAI	2015 TRITON Workshop Manual	DRAFT	TRANSFER DISASSEMBLY AND REASSEMBLY (M222-00-880-38300-01)
EXP/GCC/ MMAL/NZ	2015-2016 L200/SPORTERO/TRITON/ STRADA/STRADA SPORTERO Workshop Manual	PWTE1502R(ENG) PWTS1503R(SPA) MMAL: AU900436/AU900478 NZ:DRAFT	TRANSFER DISASSEMBLY AND REASSEMBLY (M222-00-880-38300-01)
EU	2016 L200 Workshop Manual	CKTE16E1-CD(ENG) CKTF16E1-CD(FRE) CKTG16E1-CD(GER) CKTS16E1-CD(SPA) CKTI16E1-CD(ITA) RUSSIA:N/A	TRANSFER DISASSEMBLY AND REASSEMBLY (M222-00-880-38301-01)

3. About the details :

Please refer to the attached document (Attached sheet)

4. Effective time :

The supply of service parts(o-ring) will be started from the middle of Sep 2015.

<Easy select 4WD>

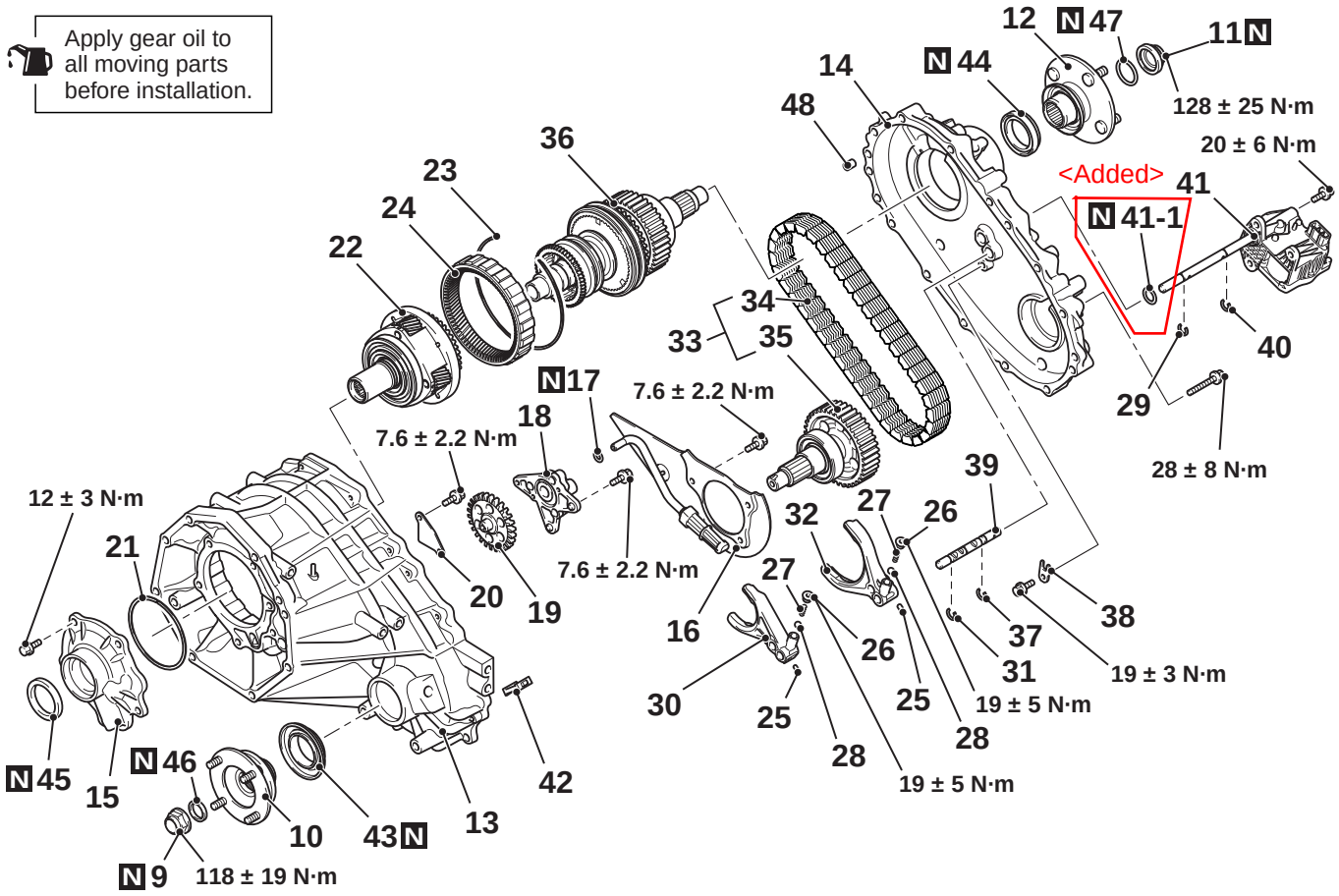

ACF02320AC

Disassembly steps

<<A>>	>>G<<	9.	Self-locking nut
<<B>>		10.	Companion flange (front)
<<A>>	>>G<<	11.	Self-locking nut
<<B>>		12.	Companion flange (rear)
		13.	Transfer chain case
	>>F<<	14.	Transfer chain case cover (rear)
	>>E<<	15.	Transfer chain case cover (front)
		16.	Oil separator
		17.	Oil ring
		18.	Oil pump assembly
		19.	Oil pump gear
		20.	Oil pool cover
		21.	Snap ring
		22.	Input gear assembly
		23.	Snap ring
		24.	Planetary ring gear
		25.	Gearshift link pin
		26.	Gearshift link plug
		27.	Gearshift link spring
		28.	Gearshift link ball
		29.	Snap ring

Disassembly steps (Continued)

		30.	Gearshift fork 2
		31.	Snap ring
		32.	Gearshift fork 1
<<C>>		33.	Chain/Front output shaft assembly
		34.	Chain
		35.	Front output shaft assembly
		36.	Rear output shaft assembly
		37.	Snap ring
		38.	Stopper
		39.	Gearshift rail
		40.	Snap ring
		41.	Transfer actuator
<Added>		41-1.	O-ring
		42.	Magnet
	>>D<<	43.	Transfer case oil seal (front)
	>>D<<	44.	Transfer case oil seal (rear)
	>>C<<	45.	Oil seal
	>>B<<	46.	Front output shaft oil seal
	>>B<<	47.	Rear output shaft oil seal
	>>A<<	48.	Transfer case pin

<Super select 4WD>

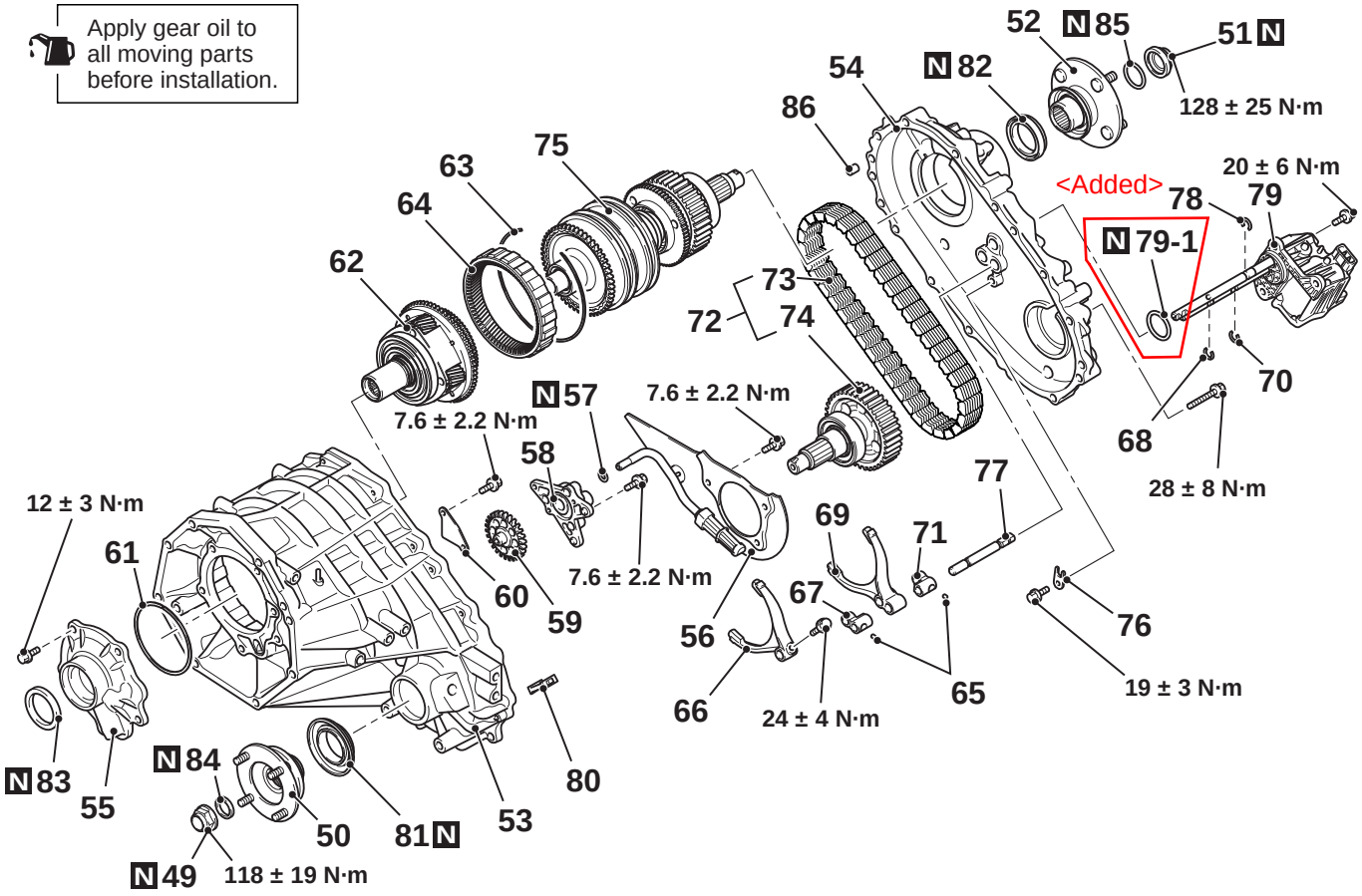

ACF02313AC

Disassembly steps

<<A>>	>>G<<	49.	Self-locking nut
<<B>>		50.	Companion flange (front)
<<A>>	>>G<<	51.	Self-locking nut
<<B>>		52.	Companion flange (rear)
		53.	Transfer chain case
	>>F<<	54.	Transfer chain case cover (rear)
	>>E<<	55.	Transfer chain case cover (front)
		56.	Oil separator
		57.	Oil ring
		58.	Oil pump assembly
		59.	Oil pump gear
		60.	Oil pool cover
		61.	Snap ring
		62.	Input gear assembly
		63.	Snap ring
		64.	Planetary ring gear
		65.	Gearshift link pin
		66.	Gearshift fork 2
		67.	Gearshift stopper
		68.	Snap ring
		69.	Gearshift fork 1

Disassembly steps (Continued)

		70.	Snap ring
		71.	Gearshift stopper
<<C>>		72.	Chain/Front output shaft assembly
		73.	Chain
		74.	Front output shaft assembly
		75.	Rear output shaft assembly
		76.	Stopper
		77.	Gearshift rail
		78.	Snap ring
		79.	Transfer actuator
<Added>		79-1.	O-ring
		80.	Magnet
	>>D<<	81.	Transfer case oil seal (front)
	>>D<<	82.	Transfer case oil seal (rear)
	>>C<<	83.	Oil seal
	>>B<<	84.	Front output shaft oil seal
	>>B<<	85.	Rear output shaft oil seal
	>>A<<	86.	Transfer case pin