SERVICE BULLETIN

MITSUBISHI MOTORS

GLOBAL AFTER SALES OFFICE, MITSUBISHI MOTORS CORPORATION

PURPOSE : CHANGE	ISSUE NO. : MSB-15EXL23-001	DATE : 2015-01-26
SUBJECT : Correction of disassembling of the oil pump built in V5AWF A/T		<DESTINATION/MODEL> (As per attached sheet 1) <M/Y> 09-15
GROUP : Gr:23(Automatic Transmission)		PAJERO/MONTERO(V80/90)

1. Description :

Please refer to the attached document for the information about the change of mention in the applicable service manual.

2. Affected service manuals :

Please refer to the attached document (Attached sheet 1)

3. About the details :

Please refer to the attached document (Attached sheet 2-5)

Attached sheet 1

EU/RUSSIA

Applicable manual	Pub. No.	Applicable title (INFO ID)	Contents
2009 PAJERO/MONTERO Workshop Manual 2009.5 PAJERO/MONTERO Workshop Manual	CBKE09E2-CD (Eng) CBKF09E2-CD (Fre) CBKG09E2-CD (Ger) CBKS09E2-CD (Spa) CBKI09E2-CD (Ita) RUSSIA:N/A	SERVICE SPECIFICATIONS (M233-10-030-03900-01)	Attached sheet 2
		OIL PUMP DEASSEMBLY (M233-10-140-02800-01)	Attached sheet 3
		OIL PUMP INSPECTION (M233-10-150-02500-01)	Attached sheet 4
		OIL PUMP REASSEMBLY (M233-10-160-02200-01)	Attached sheet 5
2010 PAJERO/MONTERO Workshop Manual	CBKE10E1-CD (Eng) CBKF10E1-CD (Fre) CBKG10E1-CD (Ger) CBKS10E1-CD (Spa) CBKI10E1-CD (Ita) RUSSIA:N/A	SERVICE SPECIFICATIONS (M233-10-030-01700-01)	Attached sheet 2
		OIL PUMP DEASSEMBLY (M233-10-140-02800-01)	Attached sheet 3
		OIL PUMP INSPECTION (M233-10-150-02500-01)	Attached sheet 4
		OIL PUMP REASSEMBLY (M233-10-160-02200-01)	Attached sheet 5
2011 PAJERO/MONTERO Workshop Manual	CBKE11E1-CD (Eng) CBKF11E1-CD (Fre) CBKG11E1-CD (Ger) CBKS11E1-CD (Spa) CBKI11E1-CD (Ita) RUSSIA:N/A	SERVICE SPECIFICATIONS (M233-10-030-01700-01)	Attached sheet 2
		OIL PUMP DEASSEMBLY (M233-10-140-02800-01)	Attached sheet 3
		OIL PUMP INSPECTION (M233-10-150-02500-01)	Attached sheet 4
		OIL PUMP REASSEMBLY (M233-10-160-02200-01)	Attached sheet 5
2012 PAJERO/MONTERO Workshop Manual	CBKE12E1-CD (Eng) CBKF12E1-CD (Fre) CBKG12E1-CD (Ger) CBKS12E1-CD (Spa) CBKI12E1-CD (Ita) RUSSIA:N/A	SERVICE SPECIFICATIONS (M233-10-030-01700-01)	Attached sheet 2
		OIL PUMP DEASSEMBLY (M233-10-140-02800-01)	Attached sheet 3
		OIL PUMP INSPECTION (M233-10-150-02500-01)	Attached sheet 4
		OIL PUMP REASSEMBLY (M233-10-160-02200-01)	Attached sheet 5
2013 PAJERO/MONTERO Workshop Manual	CVWE13E1-CD (Eng) CVWF13E1-CD (Fre) CVWG13E1-CD (Ger) CVWS13E1-CD (Spa) CVWI13E1-CD (Ita) RUSSIA:N/A	SERVICE SPECIFICATIONS (M233-10-030-01701-01)	Attached sheet 2
		OIL PUMP DEASSEMBLY (M233-10-140-02800-01)	Attached sheet 3
		OIL PUMP INSPECTION (M233-10-150-02500-01)	Attached sheet 4
		OIL PUMP REASSEMBLY (M233-10-160-02200-01)	Attached sheet 5
2014 PAJERO/MONTERO Workshop Manual	CVWE14E1-CD (Eng) CVWF14E1-CD (Fre) CVWG14E1-CD (Ger) CVWS14E1-CD (Spa) CVWI14E1-CD (Ita) RUSSIA:N/A	SERVICE SPECIFICATIONS (M233-10-030-01701-01)	Attached sheet 2
		OIL PUMP DEASSEMBLY (M233-10-140-02800-01)	Attached sheet 3
		OIL PUMP INSPECTION (M233-10-150-02500-01)	Attached sheet 4
		OIL PUMP REASSEMBLY (M233-10-160-02200-01)	Attached sheet 5
2015 PAJERO/MONTERO Workshop Manual	CVWE15E1-CD (Eng) CVWF15E1-CD (Fre) CVWG15E1-CD (Ger) CVWS15E1-CD (Spa) CVWI15E1-CD (Ita) RUSSIA:N/A	SERVICE SPECIFICATIONS (M233-10-030-01701-01)	Attached sheet 2
		OIL PUMP DEASSEMBLY (M233-10-140-02800-01)	Attached sheet 3
		OIL PUMP INSPECTION (M233-10-150-02500-01)	Attached sheet 4
		OIL PUMP REASSEMBLY (M233-10-160-02200-01)	Attached sheet 5

EXP/GCC/S.AFRICA/BRAZIL

Applicable manual	Pub. No.	Applicable title (INFO ID)	Contents
2010 PAJERO/MONTERO Workshop Manual	PWJE0908R (Eng) PWJS0909R (Spa) S.AFRICA/BRAZIL: DRAFT	SERVICE SPECIFICATIONS (M233-10-030-01700-01)	Attached sheet 2
		OIL PUMP DEASSEMBLY (M233-10-140-02800-01)	Attached sheet 3
		OIL PUMP INSPECTION (M233-10-150-02500-01)	Attached sheet 4
		OIL PUMP REASSEMBLY (M233-10-160-02200-01)	Attached sheet 5

MMAL/NZ

Applicable manual	Pub. No.	Applicable title (INFO ID)	Contents
2009 PAJERO Workshop Manual	MR936637 NZ:DRAFT	SERVICE SPECIFICATIONS (M233-10-030-03900-01)	Attached sheet 2
		OIL PUMP DEASSEMBLY (M233-10-140-01700-01)	Attached sheet 3
		OIL PUMP INSPECTION (M233-10-150-01400-01)	Attached sheet 4
		OIL PUMP REASSEMBLY (M233-10-160-01100-01)	Attached sheet 5
2010 PAJERO Workshop Manual	MR936976 NZ:DRAFT	SERVICE SPECIFICATIONS (M233-10-030-03900-01)	Attached sheet 2
		OIL PUMP DEASSEMBLY (M233-10-140-01700-01)	Attached sheet 3
		OIL PUMP INSPECTION (M233-10-150-01400-01)	Attached sheet 4
		OIL PUMP REASSEMBLY (M233-10-160-01100-01)	Attached sheet 5

Attached sheet 2

SERVICE SPECIFICATIONS

Transmission

Item		Standard value
Brake B4 pack clearance mm		0.8 – 1.1
Brake B1 pack clearance mm <Deleted>		0.56 – 0.86
Oil pump body bush clearance mm		ϕ38.113 – 38.138
Stator shaft bush clearance mm		ϕ21.501 – 21.527
Oil pump driven gear to oil pump body clearance mm		0.10 – 0.17
Between the oil pump drive gear teeth and oil pump driven gear teeth clearance mm		0.07 – 0.15
Oil pump gear clearance mm		0.03 – 0.05
Forward clutch return spring sub-assembly mm <Deleted>		26.74
Direct clutch return spring sub-assembly mm		19.51
Reverse clutch return spring sub-assembly mm		21.04
Input shaft sub-assembly bush mm		ϕ20.000 – 20.025
Direct clutch hub sub-assembly bush mm	Front	ϕ26.037 – 26.062
	Rear	ϕ26.037 – 26.062
Reverse clutch hub sub-assembly bush mm	Front	ϕ35.812 – 35.837
	Rear	ϕ35.812 – 35.837
Direct clutch clearance mm		0.6 – 0.9
Reverse clutch clearance mm		0.5 – 0.8
Forward clutch clearance mm		0.8 – 1.0
Brake piston return spring sub-assembly No. 3 mm		15.72
Brake piston return spring sub-assembly mm		17.05
RR planetary ring gear assembly, bimetal formed bush mm		ϕ32.176 – 32.201
FR planetary gear assembly bush mm		ϕ57.430 – 57.405
RR planetary gear assembly bush mm		ϕ20.000 – 20.025
Brake piston return spring sub-assembly No. 2 mm		22.66
Low/reverse brake return spring sub-assembly mm		23.74

Attached sheet 3 (1/4)

<Incorrect>

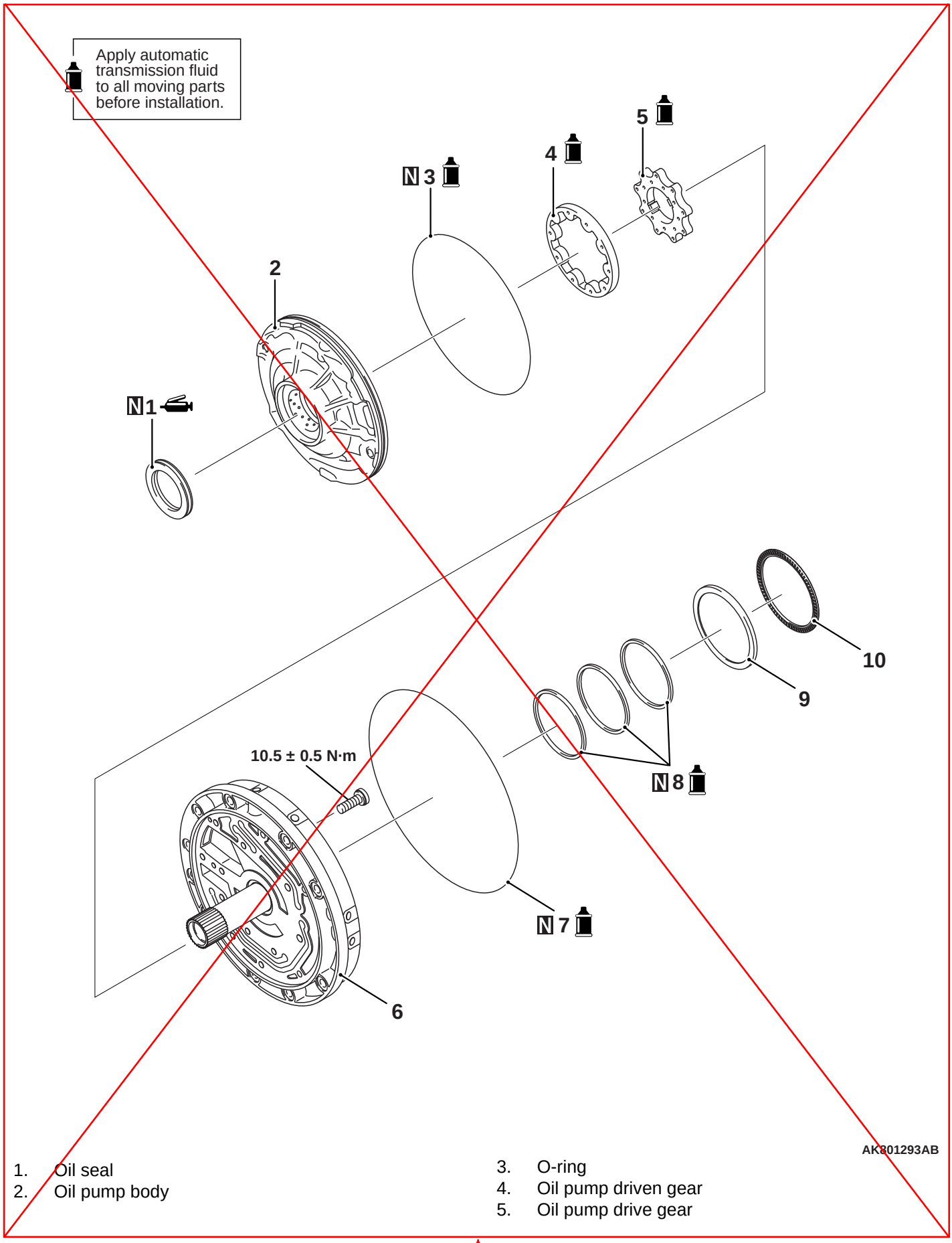

1. Oil seal
2. Oil pump body
3. O-ring
4. Oil pump driven gear
5. Oil pump drive gear

MSB-15EXL23-001(15RV004)

Insert the attached sheet 3 (2/4)

Attached sheet 3 (2/4)

<Correct>

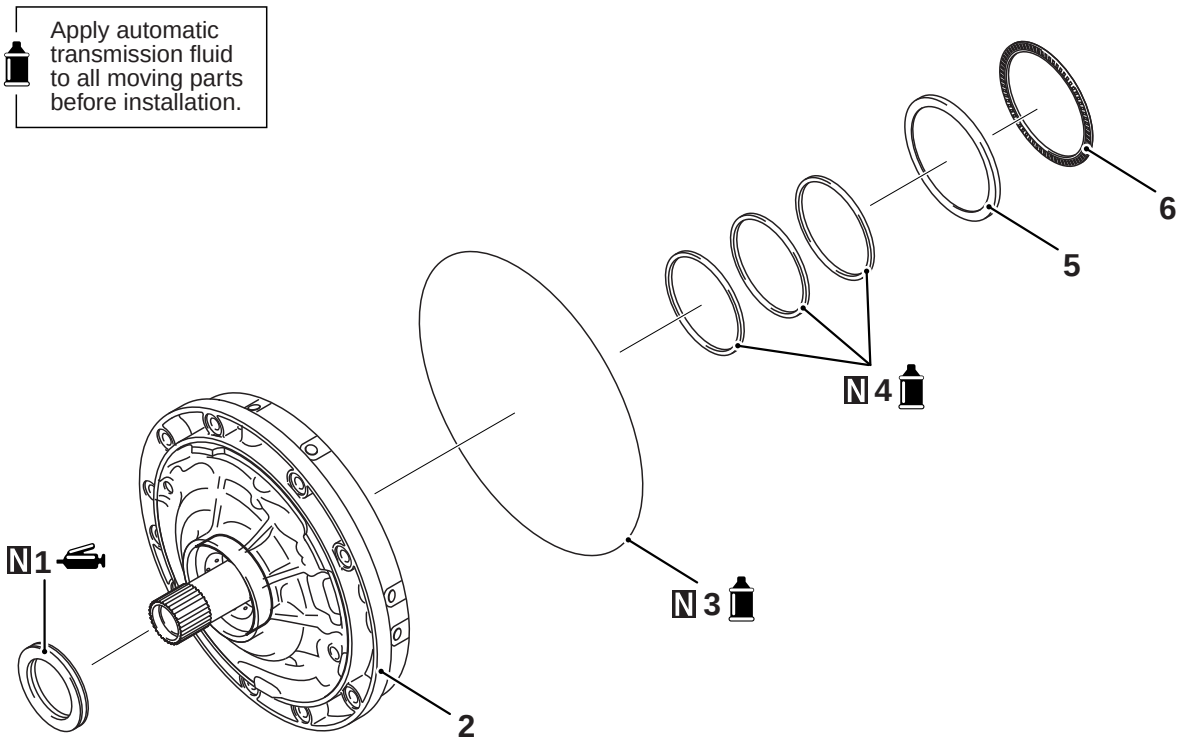

ACF00007AB

1. Oil seal
2. Oil pump assembly
3. O-ring
4. Seal ring
5. Thrust bearing race No. 1
6. Thrust needle roller bearing

6. Stator shaft sub-assy
7. O-ring
8. Seal ring
9. Thrust bearing race No. 1
10. Thrust needle roller bearing

<Deleted>

DISASSEMBLY

1. O-RING REMOVAL

Remove the O-ring from the oil pump assy.

SIZE: O-ring

Inner diameter (mm)	Thickness (mm)
218.40	3.50

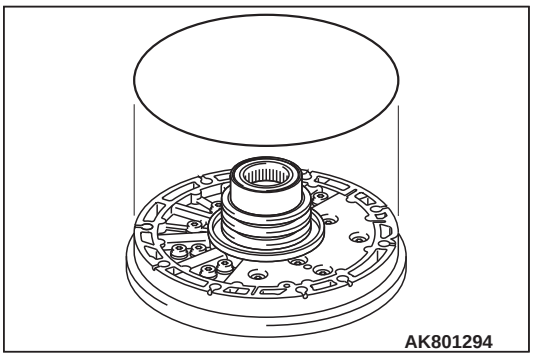

oil pump assembly <Correct>

2. SEAL RING REMOVAL

Remove the 3 seal rings from the ~~stator shaft assy~~. <Incorrect>

SIZE: Seal ring

Outer diameter (mm)	Thickness (mm)
67.46	2.32

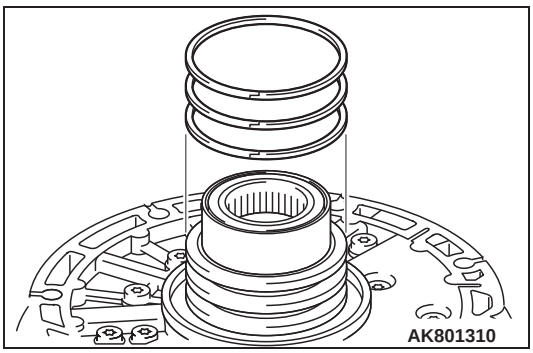

<Deleted>

3. STATOR SHAFT ASSY REMOVAL

1. Using a torx wrench, remove the 14 screws.
2. Remove the stator shaft assy from the oil pump body.

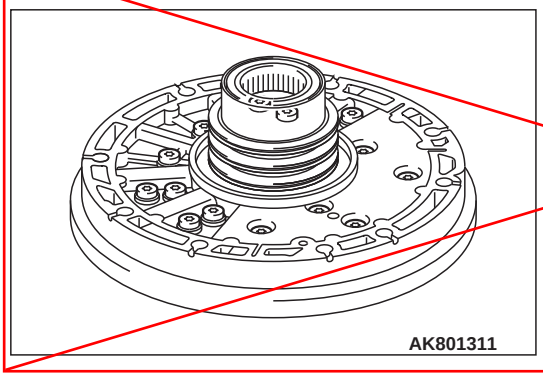

Attached sheet 3 (4/4)

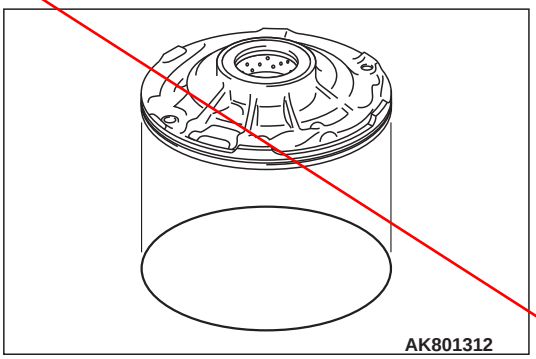

4. O-RING REMOVAL

Remove the O-ring from the oil pump body.

SIZE: O-ring

Inner diameter (mm)	Thickness (mm)
172.60	2.62

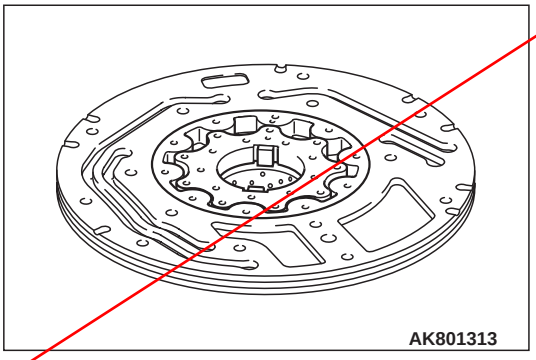

5. OIL PUMP DRIVE GEAR / OIL PUMP DRIVEN GEAR REMOVAL

Remove the oil pump drive gear and the oil pump driven gear from the oil pump body.

<Deleted>

6. OIL SEAL REMOVAL

CAUTION

Be careful not to damage the bush on the oil pump ~~body~~.

Using a screwdriver, remove the oil seal from the oil pump ~~body~~.

<Incorrect>

<Incorrect>

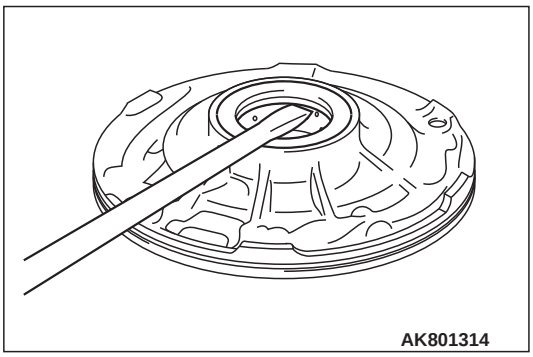

assembly

<Correct>

Attached sheet 4 (1/3)

INSPECTION

1. CHECK OIL PUMP BODY BUSH

CAUTION

Measure the inside diameter at different places and take an average. If the measurement is greater than the maximum, replace the oil pump body with a new one. When the oil pump body is replaced, inspect the contact surface opposed to the torque converter assembly. If the surface is scratched or discoloured, replace the torque converter assembly with a new one.

Using a dial indicator, measure the inside diameter of the oil pump body bush.

Standard value: 38.113 – 38.138 mm
(For oil pump body bush clearance)

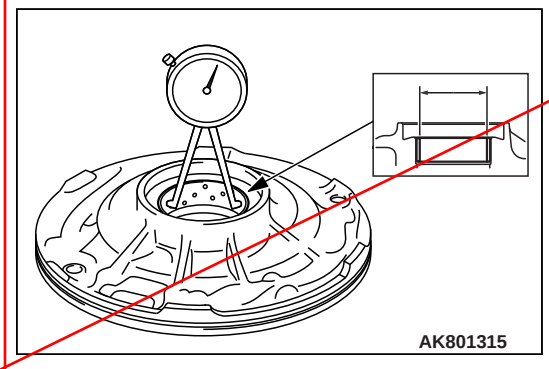

<Deleted>

2. CHECK STATOR SHAFT BUSH

<Correct> oil pump

CAUTION

Measure the inside diameter at different places and take an average. If the measurement is greater than the maximum, replace the ~~stator shaft~~ assembly with a new one. When the ~~stator shaft~~ assembly is replaced, inspect the contact surface opposed to the input shaft sub-assembly. If the surface is scratched or discoloured, replace the input shaft sub-assembly with a new one.

Using a dial indicator, measure the inside diameter of the stator shaft bush.

Standard value: 21.501 – 21.527 mm
(For stator shaft bush clearance)

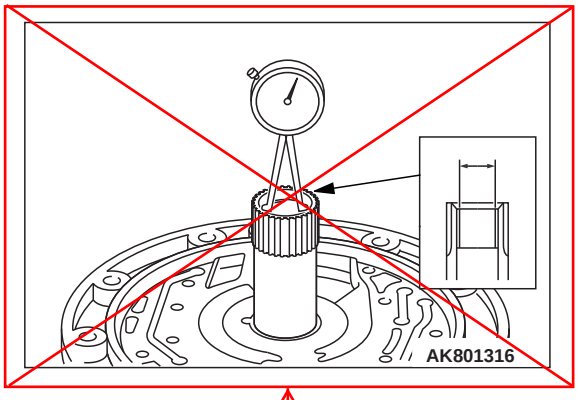

<Incorrect>

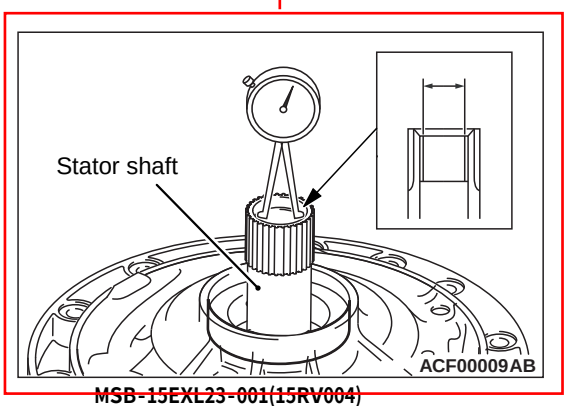

<Correct>

3. CHECK BODY CLEARANCE

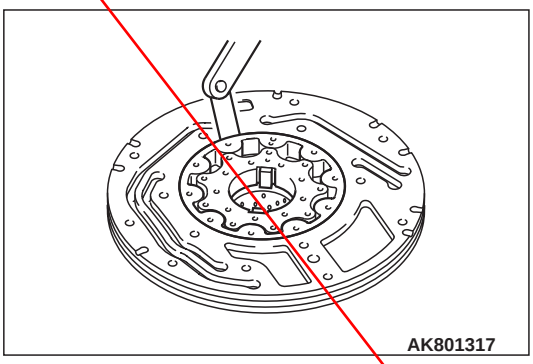
AK801317

CAUTION

If the clearance is greater than the maximum, replace the oil pump body with a new one.

Push the oil pump driven gear to one side of the oil pump body.
Using a feeler gauge, measure the clearance.

Standard value: 0.10 – 0.17 mm
(For oil pump driven gear to oil pump body clearance)

4. CHECK BODY CLEARANCE OF BOTH GEARS

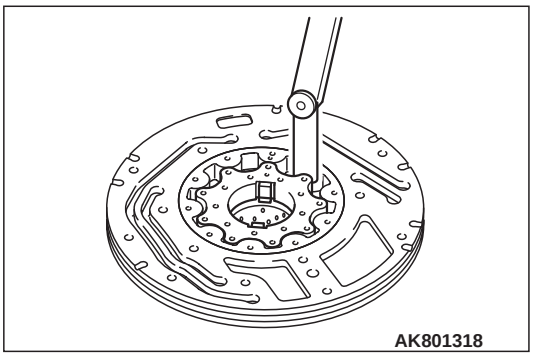
AK801318

CAUTION

Measure the tip clearance at different places and take an average. If the measurement is greater than the maximum, replace the oil pump drive gear and the oil pump driven gear with new ones.

Using a feeler gauge, measure the tip clearance between the oil pump drive gear teeth and the oil pump driven gear teeth.

Standard value: 0.07 – 0.15 mm
(Between the oil pump drive gear teeth and the oil pump driven gear teeth)

5. CHECK SIDE CLEARANCE OF BOTH GEARS

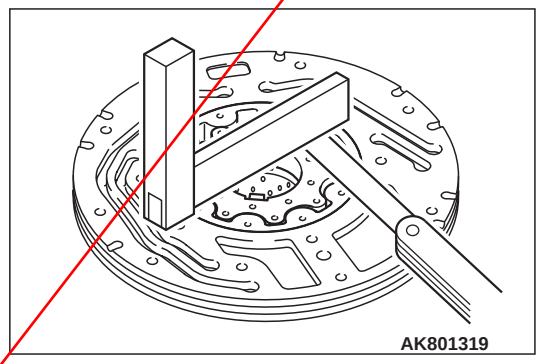
AK801319

CAUTION

If the measurement is not within the specified range, replace the oil pump drive gear and the oil pump driven gear with new ones that will allow the side clearance to fall within the specified range. If the side clearance is still not within the specified range, replace the oil pump assembly with a new one.

Using a steel straight edge and feeler gauge, measure the side clearance of both gears.

Standard value: 0.03 – 0.05 mm
(For oil pump gear clearance)

<Deleted>

Attached sheet 4 (3/3)

<Deleted>

SIZE: Oil pump gear

Oil pump drive gear & Oil pump driven gear	Mark	Thickness (mm)
	0	10.736 – 10.742
	1	10.743 – 10.749
	2	10.750 – 10.756
	3	10.757 – 10.763
	4	10.764 – 10.770
	5	10.771 – 10.777
	6	10.778 – 10.784

Attached sheet 5 (1/2)

REASSEMBLY

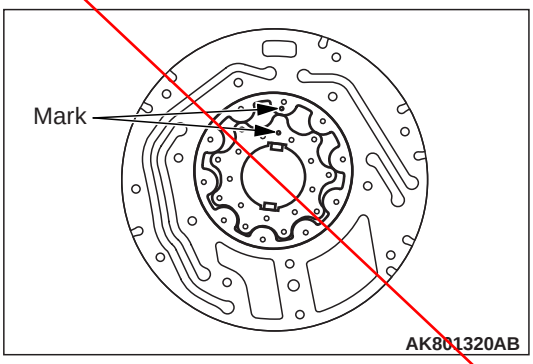

1. OIL PUMP DRIVE GEAR AND OIL PUMP DRIVEN GEAR INSTALLATION

1. Coat the oil pump drive gear, oil pump driven gear and sliding surface of the oil pump body with ATF.
2. Install the oil pump drive gear and the oil pump driven gear to the oil pump body as shown in the illustration.

   NOTE: Make sure that the marks on the both gears are visible.

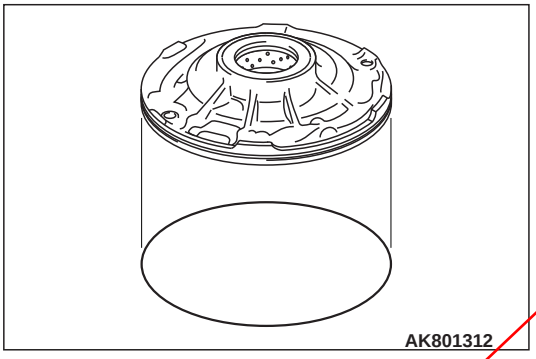

2. O-RING INSTALLATION

1. Coat a new O-ring with ATF.
2. Install the O-ring to the oil pump body.

SIZE: O-ring

Inner diameter (mm)	Thickness (mm)
172.60	2.62

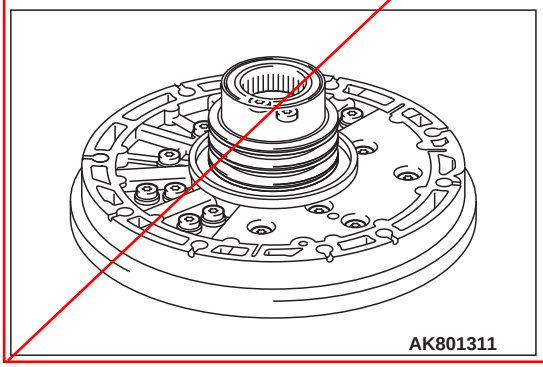

3. STATOR SHAFT ASSY INSTALLATION

Align the stator shaft assy with each screw hole of the oil pump body and temporarily tighten the 14 screws to the specified torque 10.5 ± 0.5 N·m.

<Deleted>

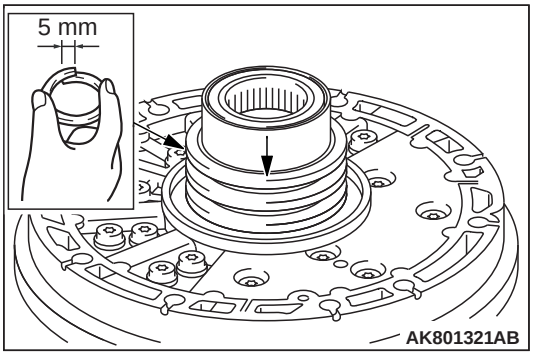

4. SEAL RING INSTALLATION

<Incorrect>

1. Coat 3 new seal rings and sliding surface of the ~~stator shaft assy~~ with ATF.

⚠ CAUTION

- **Be careful not to expand the seal rings too much.**
- **Be careful not to compress the seal rings too much, before installing the seal rings.**

2. Compress the 3 seal rings as shown in the illustration. Then install the seal rings to the ~~stator shaft assy~~.

<Incorrect>

<Correct> oil pump assembly

SIZE: Seal ring

Outer diameter (mm)	Thickness (mm)
67.46	2.32

NOTE: Check that the seal rings rotate smoothly after installing them.

5. O-RING INSTALLATION

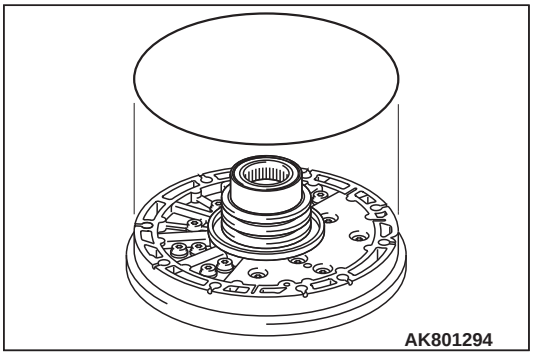

1. Coat a new O-ring with ATF.
2. Install the O-ring to the oil pump assy.

SIZE: O-ring

Inner diameter (mm)	Thickness (mm)
218.40	3.50

6. OIL PUMP ASSY INSTALLATION

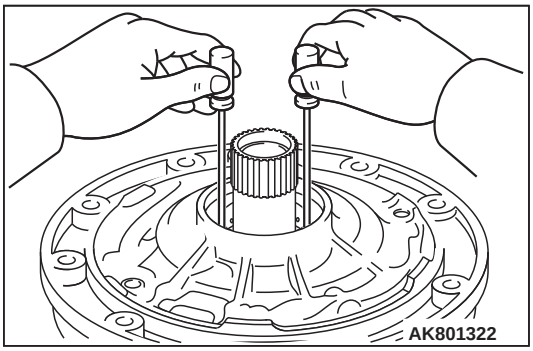

Turn the oil pump drive gear with 2 screwdrivers and make sure it rotates smoothly.

7. OIL SEAL INSTALLATION

⚠ CAUTION

Be careful not to damage the oil seal.

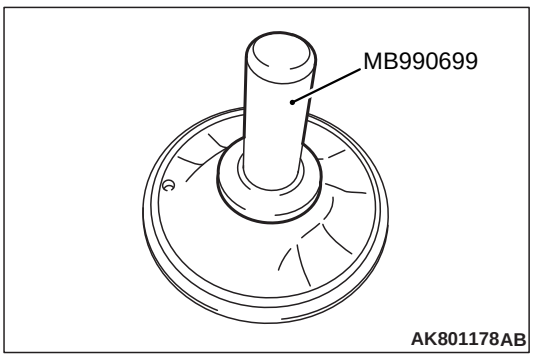

1. Using the special tool (MB990699) and a hammer, install a new oil seal to the ~~oil pump body~~. <Incorrect>

   Standard value: 0 ± 0.2 mm
   (From the end of the oil pump body)

2. Coat the oil seal lip with grease.

oil pump assembly <Correct>