SERVICE BULLETIN

MITSUBISHI MOTORS

GLOBAL AFTER SALES OFFICE, MITSUBISHI MOTORS CORPORATION

PURPOSE : CHANGE	ISSUE NO. : MSB-15EXL27-002	DATE : 2015-02-18
SUBJECT : Changes of the installation procedures of the pipe assembly, breather hose, and clip		<DESTINATION/MODEL> (As per attached sheet 1) <M/Y> 09-11
GROUP : Gr:27(Rear axle)		

1. Description :

Please refer to the attached document for the information about the change of mention in the applicable service manual.

2. Affected service manuals :

Please refer to the attached document (Attached sheet 1)

3. About the details :

Please refer to the attached document (Attached sheet 2)

New pipe assembly

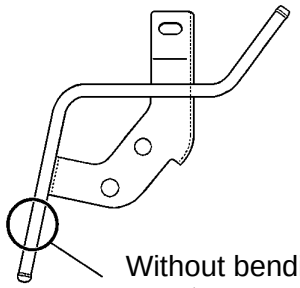

Without bending

Old pipe assembly

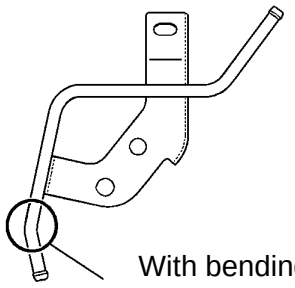

With bending

4. Effective time :

The boundary of the middle of April 2015 production, old and new pipe assembly parts will be changed. Also, the installation procedures of the breather hose and clip in the old and new pipe assembly will be added.

Attached sheet 1

THAILAND

Applicable manual	Pub. No.	Applicable title (INFO ID)	Content
2009 PAJERO SPORT Workshop Manual	THAILAND:DRAFT	REAR DIFFERENTIAL LOCK REMOVAL AND INSTALLATION (M272-00-270-16701-01)	Attached sheet 2
2010 PAJERO SPORT Workshop Manual	THAILAND:DRAFT	REAR DIFFERENTIAL LOCK REMOVAL AND INSTALLATION (M272-00-270-16702-01)	
2011 PAJERO SPORT Workshop Manual	THAILAND:DRAFT		

EXP/GCC (BRAZIL KD)

Applicable manual	Pub. No.	Applicable title (INFO ID)	Content
2009 NATIVA/PAJERO SPORT/ MONTERO SPORT Workshop Manual	PWJE0808R-2 (Eng.) PWJS0809R-2 (Spa.) BRAZIL:DRAFT	REAR DIFFERENTIAL LOCK REMOVAL AND INSTALLATION (M271-00-061-18601-01)	Attached sheet 2
2010 NATIVA/PAJERO SPORT/ MONTERO SPORT Workshop Manual	PWJE0910R (Eng.) PWJS0911R (Spa.) BRAZIL:DRAFT	REAR DIFFERENTIAL LOCK REMOVAL AND INSTALLATION (M272-00-270-16702-01)	
2011 NATIVA/PAJERO SPORT/ MONTERO SPORT Workshop Manual	PWJE1004R (Eng.) PWJS1005R (Spa.) BRAZIL:DRAFT		

RUSSIA (RUSSIA KD)

Applicable manual	Pub. No.	Applicable title (INFO ID)	Content
2009 NATIVA/PAJERO SPORT/ MONTERO SPORT Workshop Manual	N/A	REAR DIFFERENTIAL LOCK REMOVAL AND INSTALLATION (M271-00-061-18601-01)	Attached sheet 2
2010 NATIVA/PAJERO SPORT/ MONTERO SPORT Workshop Manual	N/A	REAR DIFFERENTIAL LOCK REMOVAL AND INSTALLATION (M272-00-270-16702-01)	
2011 NATIVA/PAJERO SPORT/ MONTERO SPORT Workshop Manual	N/A		

MMAL/NZ

Applicable manual	Pub. No.	Applicable title (INFO ID)	Content
2010 GHALLENGER Workshop Manual	MR936972 NZ:DRAFT	REAR DIFFERENTIAL LOCK REMOVAL AND INSTALLATION (M272-00-270-16702-01)	Attached sheet 2
2011 GHALLENGER Workshop Manual	AU900055 NZ:DRAFT		

Attached sheet 2(1/3)

REAR DIFFERENTIAL LOCK <4WD>

REMOVAL AND INSTALLATION

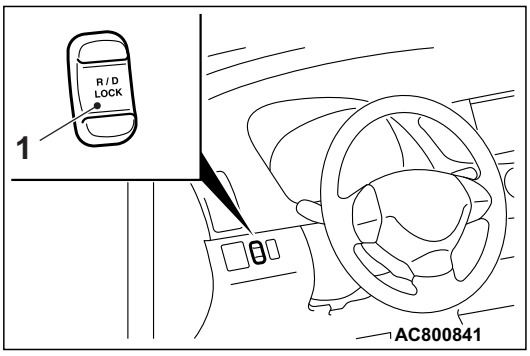

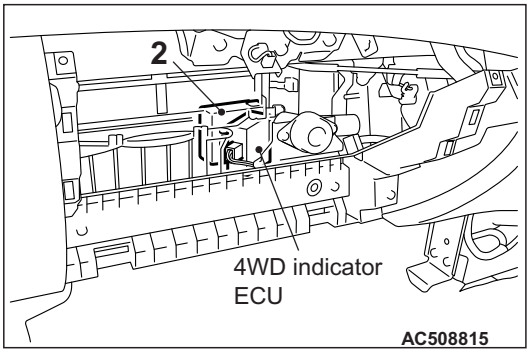

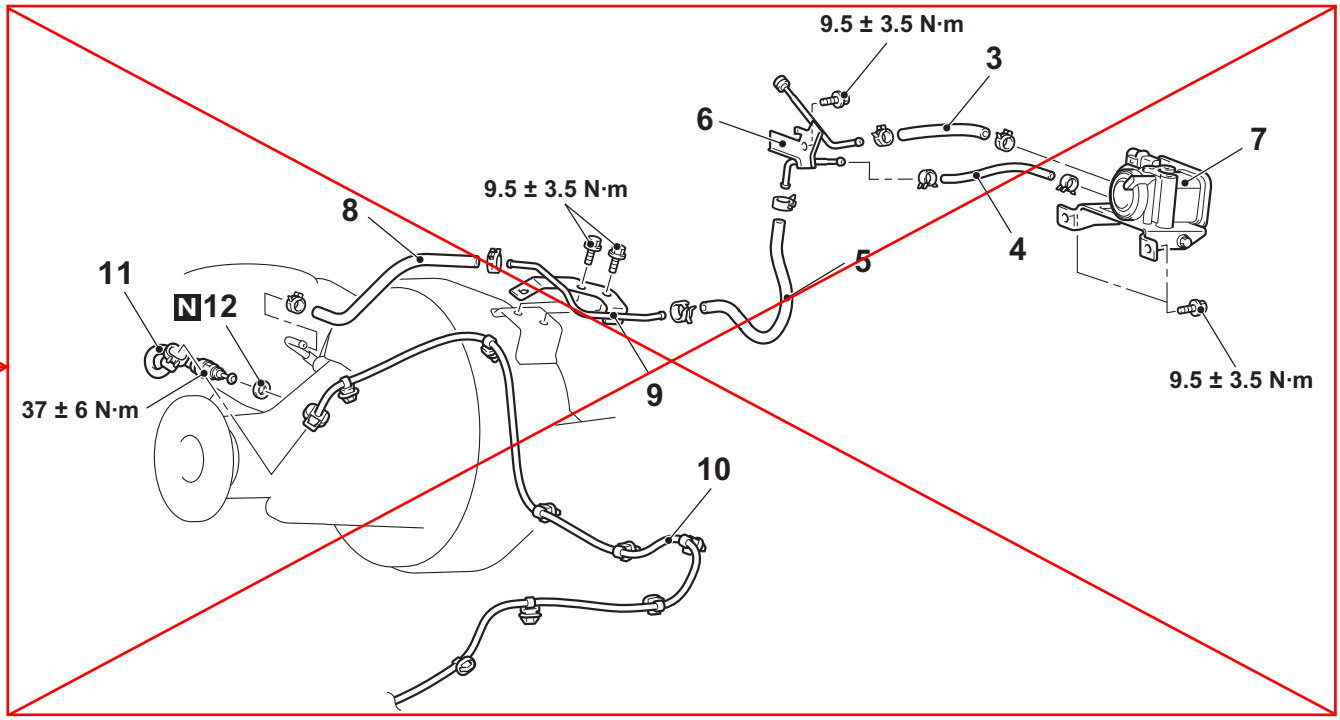

Insert the attached sheet 2(3/3)(A)

Removal steps

1. Rear differential lock switch
   - Glove box assembly (Refer to GROUP 52A, Instrument Panel .)
2. Rear differential lock-ECU
3. Vapour hose
4. Vapour hose
5. Breather hose
6. Breather pipe assembly
7. Rear differential lock air pump
8. Vapour hose
9. Pipe assembly
10. Position harness
11. Rear differential lock detection switch (Refer to P.27-29.)
12. Gasket

<New> C
<Old> B
>>B<<
<New> B
<Old> A
>>A<<
>>A<< 10.
11.
12.
13.
<New>
<Old>
<Added>
>>A<< 9. Breather hose and clip

INSTALLATION SERVICE POINTS

>>A<< VAPOUR HOSE INSTALLATION

<Old> A
<New> B

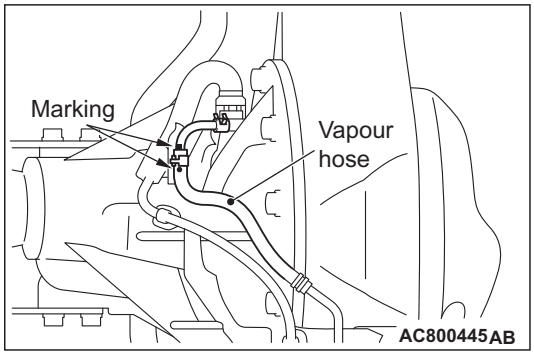

Connect the vapour hose so that the marking is aligned as shown in the figure.

Insert the attached sheet 2(3/3)(B)

>>B<< BREATHER HOSE INSTALLATION

<Old> <New> C

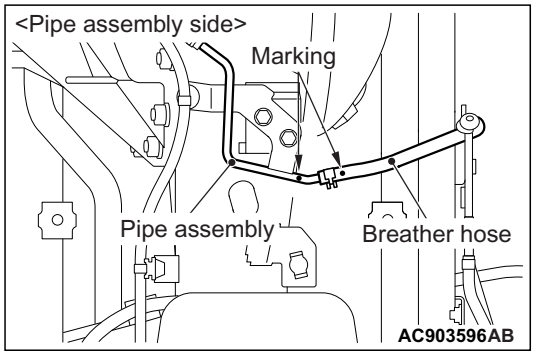

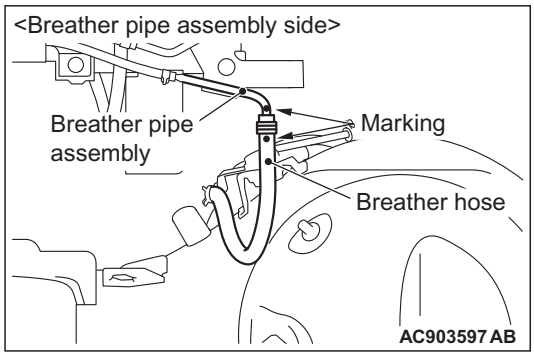

Connect the breather hose so that the marking is aligned as shown in the figure.

INSPECTION

REAR DIFFERENTIAL LOCK SWITCH CHECK

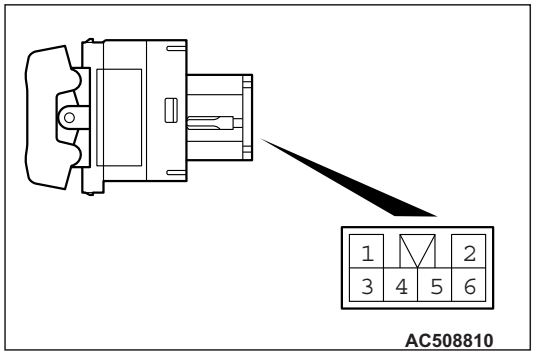

Check for continuity between the terminals of the switch.

Switch position	Tester connection	Specified condition
ON switch operation (push the upper part of switch)	3 - 6	Continuity (less than 2 Ω)
N (released switch position)	3 - 6 and 2 - 3	Open circuit
OFF switch operation (push the lower part of switch)	2 - 3	Continuity (less than 2 Ω)

REAR DIFFERENTIAL LOCK-ECU CHECK

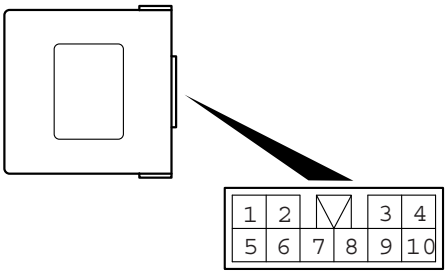

Terminal No.	Item	Condition		Terminal voltage
2	Vehicle speed reed switch	Select "D" <A/T>, or "1st"<M/T> and drive forward slowly.		5 V
3	Ignition switch (IG1)	Ignition switch: OFF		1 V or less
		Ignition switch: ON		System voltage
4	Rear differential lock air pump	Ignition switch: ON	When filling or holding	System voltage
			When releasing	1 V or less

(A) <New>

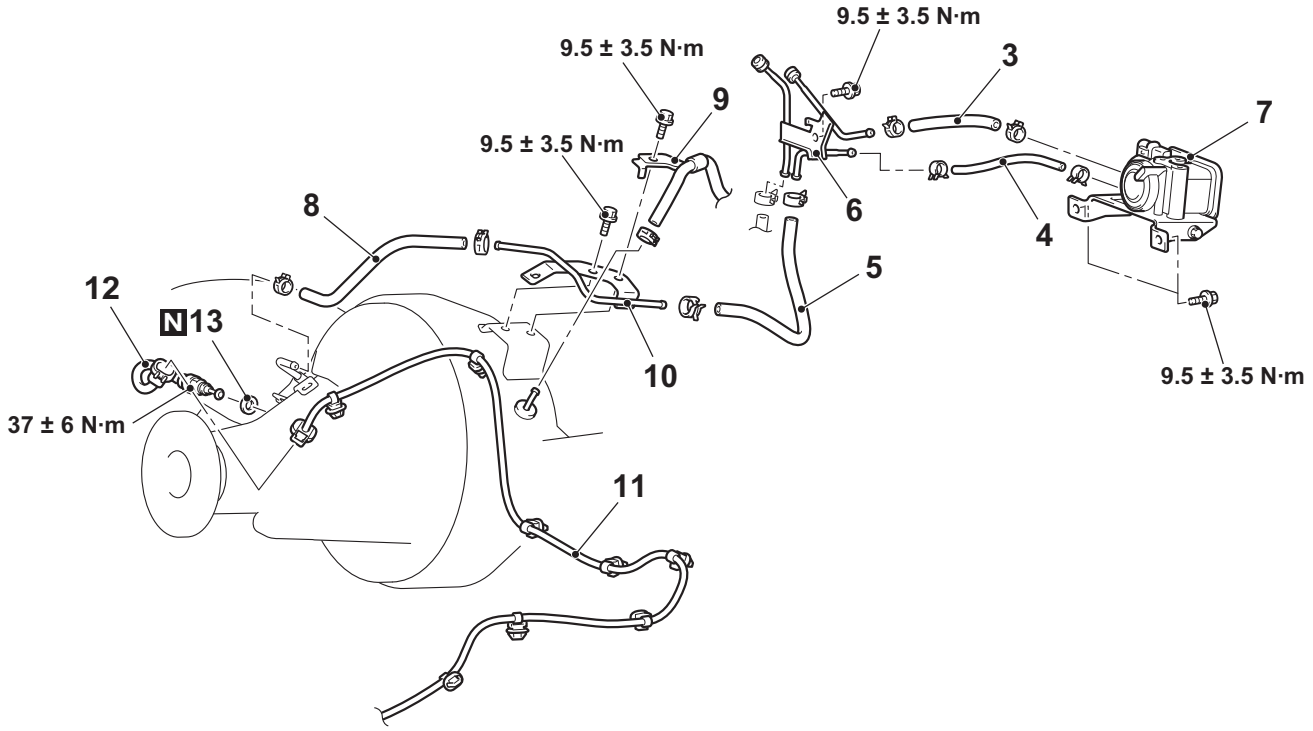

(B) <Added>

>>A<< PIPE ASSEMBLY/BREATHER HOSE AND CLIP INSTALLATION

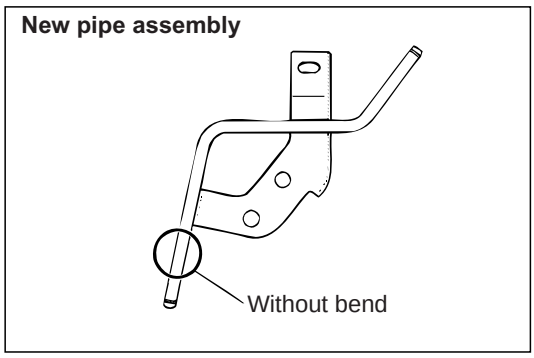

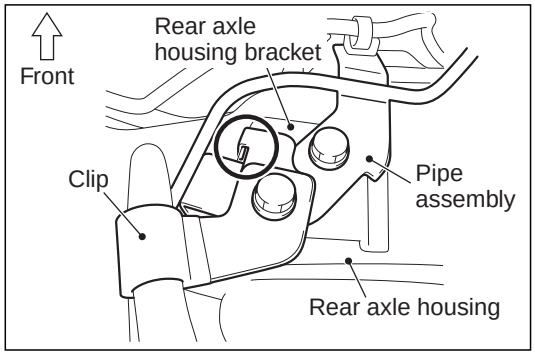

When the new pipe assembly is used:
Butt the counterhold of the clip against the bracket on the rear axle housing as shown.

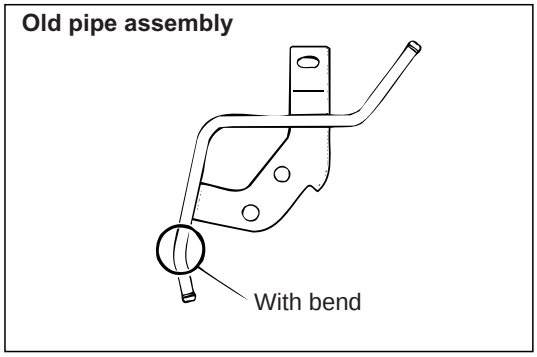

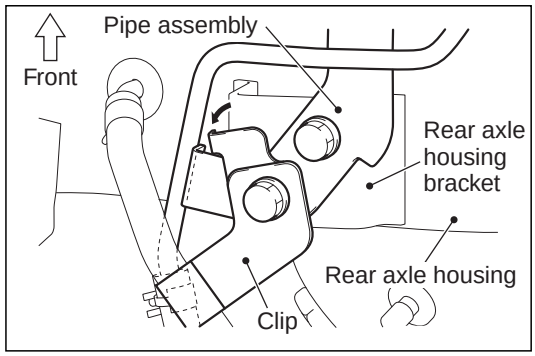

When the old pipe assembly is used:
Twist the clip in the direction shown to butt its counterhold against the pipe assembly.