SERVICE BULLETIN

MITSUBISHI MOTORS

GLOBAL AFTER SALES OFFICE, MITSUBISHI MOTORS CORPORATION

PURPOSE : CORRECTION	ISSUE NO. : MSB-15EXL42-501	DATE : 2015-05-13
SUBJECT : Correction regarding the front deck panel removal		<DESTINATION/MODEL> (EU/RUSSIA/G.EXP/GCC/ MMAL/NZ/THAILAND) <M/Y> 15-16
GROUP : Gr:42(Body)		L200/SPORTERO/TRITON/STRADA/ STRADA SPORTERO(KJ0T/KL0T/KK0T)

1. Description :

Please refer to the attached document for the correction of the error in writing existing in the applicable service manual.

2. Affected service manuals :

Destination	Applicable manual	Pub. No.	Applicable title (INFO ID)
THAI	2015 TRITON Workshop Manual	DRAFT	FRONT DECK PANEL REMOVAL AND INSTALLATION (M421-01-150-01500-01)
EXP/GCC/ MMAL/NZ	2016 L200/SPORTERO/TRITON/ STRADA/STRADA SPORTERO Workshop Manual	PWTE1502R(ENG) PWTS1503R(SPA) MMAL:AU900436 AU900478 NZ:DRAFT	FRONT DECK PANEL REMOVAL AND INSTALLATION (M421-01-150-01500-01)
EU	2016 L200 Workshop Manual	CKTE16E1-CD(ENG) CKTF16E1-CD(FRE) CKTG16E1-CD(GER) CKTS16E1-CD(SPA) CKTI16E1-CD(ITA) RUSSIA:N/A	SPECIAL TOOL (M428-00-060-93400-01)
			FRONT DECK PANEL REMOVAL AND INSTALLATION (M421-01-150-02600-01)

3. About the details :

Please refer to the attached document.

- Attached sheet 1 is for Thailand, G.EXP, GCC, MMAL, and NZ.
- Attached sheets 2-3 are for EU and Russia.

Attached sheet 1

REMOVAL SERVICE POINTS

<<A>> FRONT DECK PANEL REMOVAL

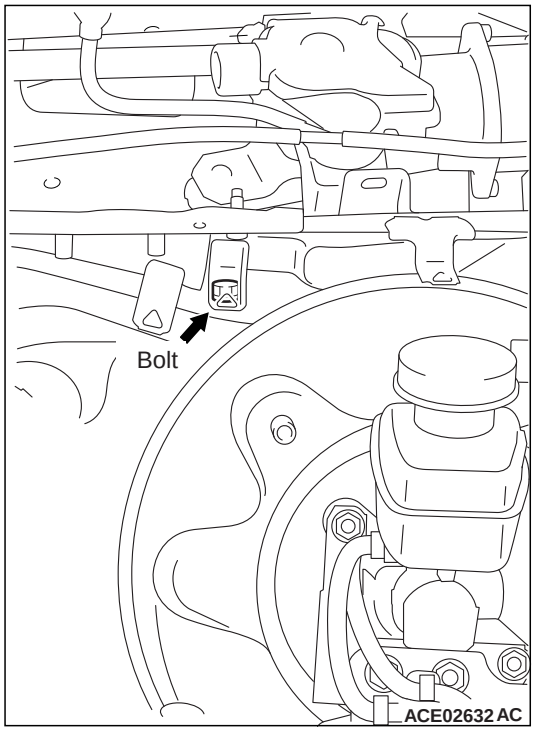

<Added> <4D5-L.H. drive vehicles>

Remove the shown bolt by using the socket of special tool MB992993 to remove and install the front deck panel. Note that MB992993 cannot be used in some cases due to a manufacturing tolerance. In such a case, loosen the brake booster mounting nut (passenger compartment side) to pull the brake booster assembly towards the front of the vehicle in order to allow sufficient clearance.

Attached sheet 2

INSTALLATION SERVICE POINT

>>A<< REAR BODY GROMMET INSTALLATION

⚠ CAUTION

Install the grommets at correct locations in order not to damage them.

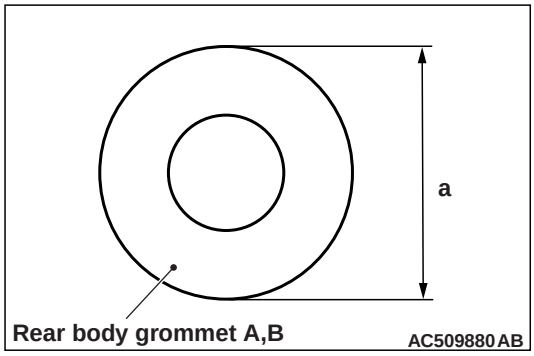

Standard value (a):
Rear body grommet A: 40 mm
Rear body grommet B: 33 mm

<Deleted>

LOOSE PANEL

SPECIAL TOOL

M1428000600934

Tool	Number	Name	Use
–	MB992993	F/head and o/end combination wrench (10)	Front deck panel removal and installation

Attached sheet 3(1/2)

REMOVAL AND INSTALLATION

M1421011500026

Pre-removal and Post-installation Operation
- Front Deck Garnish Removal and Installation (Refer to GROUP 51, Front Deck Garnish).
- Windshield Wiper Link Assembly Removal and Installation (Refer to GROUP 51, Windshield Wiper .)
- Brake booster vacuum hose connection (Refer to GROUP 35A – Master Cylinder Assembly and Brake Booster Assembly <LHD>, <RHD>
- Brake booster vacuum pipe Removal and Installation (Refer to GROUP 35A – Master Cylinder Assembly and Brake Booster Assembly <LHD>, <RHD>

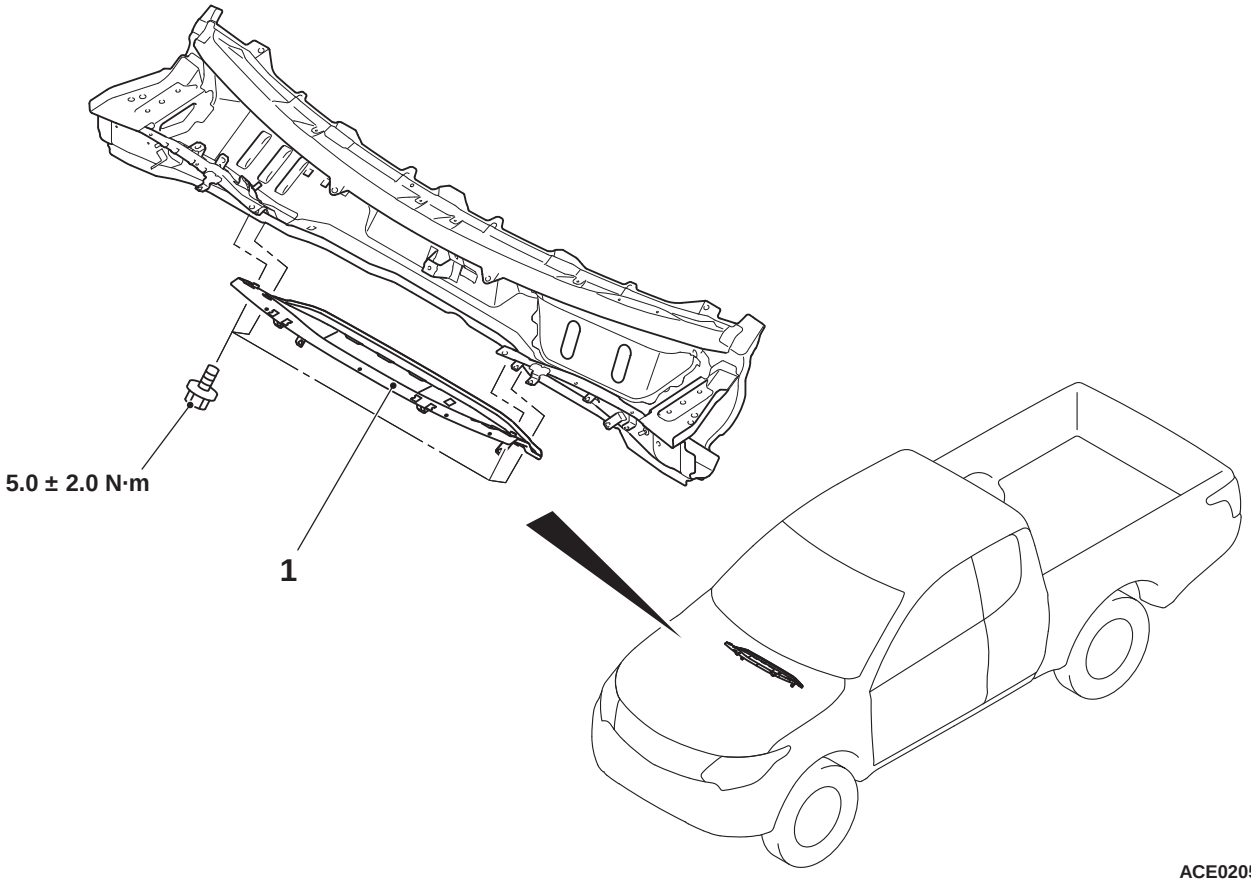

ACE02050AB

Removal steps
- Engine control harness connection (Front deck panel side)

<Deleted> ~~<<A>>~~

Removal steps (Continued)
- Font harness connection (Front deck panel side)

1. Front deck panel

Attached sheet 3(2/2)

<Deleted>

REMOVAL SERVICE POINT

<<A>> FRONT DECK PANEL REMOVAL

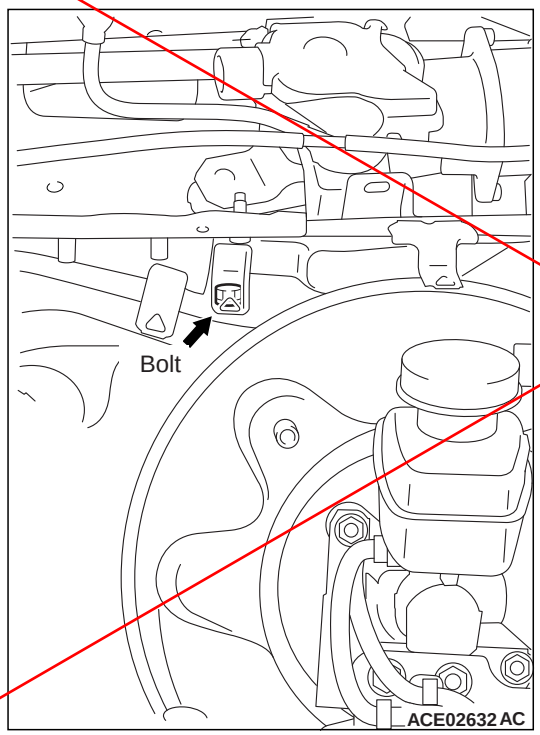

Remove the shown bolt by using special tool f/head and o/end combination wrench (MB992993) to remove and install the front deck panel. Note that MB992993 cannot be used in some cases due to a manufacturing tolerance. In such a case, loosen the brake booster mounting nut (passenger compartment side) to pull the brake booster assembly towards the front of the vehicle in order to allow sufficient clearance.