SERVICE BULLETIN

MITSUBISHI MOTORS

GLOBAL AFTER SALES OFFICE, MITSUBISHI MOTORS CORPORATION

PURPOSE : CHANGE	ISSUE NO. : MSB-15EXL52-002	DATE : 2015-05-19
SUBJECT : Changes of the pasting up position of the warning/caution labels of the front seat belt pre-tensioner		<DESTINATION/MODEL> EU/RUSSIA/G.EXP/MMAL/ NZ/CHINA <M/Y> 10/12/15
GROUP : Gr:52(Interior/SRS Airbag)		PAJERO/MONTERO(V80/90)

1. Description :

Please refer to the attached document for the information about the change of mention in the applicable service manual.

2. Affected service manuals :

Please refer to the attached document (Attached sheet 1)

3. About the details :

Please refer to the attached document (Attached sheet 3)

4. Effective time :

From the vehicles produced from the end of April 2015.

<FOR OVERSEAS MARKET>
EU/RUSSIA

Applicable manual	Pub. No.	Applicable title (INFO ID)	Content
2015 PAJERO/MONTERO Workshop Manual	CVWE15E1-CD (Eng) CVWF15E1-CD (Fre) CVWG15E1-CD (Ger) CVWS15E1-CD (Spa) CVWI15E1-CD (Ita) RUSSIA:N/A	Service precautions (M524-00-031-84500-01)	Attached sheet 3(1/4)
		Warning/caution labels (M524-00-302-27700-01)	Attached sheet 3(3/4)

GENERAL EXPORT/GCC/CHINA

Applicable manual	Pub. No.	Applicable title (INFO ID)	Content
2010 PAJERO/MONTERO Workshop Manual	PWJE0908R (Eng) PWJS0909R (Spa) CHINA:DRAFT	Warning/caution labels (M524-00-301-86500-01)	Attached sheet 3(2/4)

AUSTRALIA AND NEW ZEALAND

Applicable manual	Pub. No.	Applicable title (INFO ID)	Content
2010 PAJERO Workshop Manual	MR936976 NZ:DRAFT	Warning/caution labels (M524-00-301-42300-01)	Attached sheet 3(4/4)

GENERAL EXPORT/CHINA/AUSTRALIA AND NEW ZEALAND

Applicable manual	Pub. No.	Applicable title (INFO ID)	Content
2012 PAJERO/MONTERO Workshop Manual	PWJE1101R (Eng) PWJS1102R (Spa) CHINA:DRAFT MMAL:AU900214 NZ:DRAFT	Service precautions (M524-00-031-98600-01)	Attached sheet 3(1/4)

Attached sheet 3(1/4)

SERVICE PRECAUTIONS

M1524000301845

⚠ DANGER

In order to avoid injury to yourself or others from accidental deployment of the air bag during servicing, read and carefully follow all the precautions and procedures described in this manual.

⚠ CAUTION

- **Do not use any electrical test equipment on or near SRS components, except those specified on .**
- **Never Attempt to Repair the Following Components:**
  - **SRS air bag control unit (SRS-ECU)**
  - **Clock spring**
  - **Driver's and passenger's (front) air bag modules**
  - **Side-airbag module**
  - **Curtain air bag module**
  - **Front impact sensor**
  - **Side impact sensors**
  - **Passenger's air bag cut off switch**
  - **Seat belt with pre-tensioner**

NOTE: If any of these components are diagnosed as faulty, they should only be replaced, in accordance with the INDIVIDUAL COMPONENTS SERVICE procedures in this manual, starting at page .

⚠ CAUTION

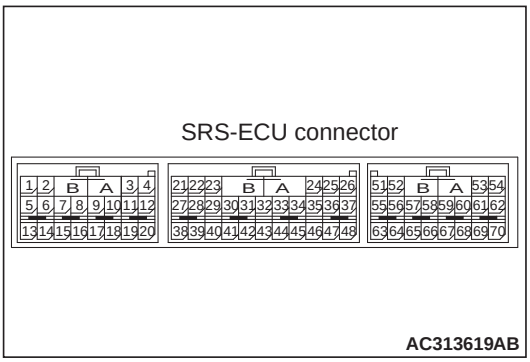

Do not attempt to repair the wiring harness connectors of the SRS. If a defective wiring harness is found, repair or replace it by referring to the table below.

<Added>

- Never heat or incinerate the air bag modules and seat belt pre-tensioners.

SRS-ECU terminal No.	Destination of harness	Remedy
5, 6	Floor wiring harness (LH) → Curtain air bag module (LH)	Correct or replace floor wiring harness.
7, 8	Floor wiring harness (LH) → Seat belt pre-tensioner (LH)	Correct or replace the floor wiring harness.
9, 10	Floor wiring harness (LH) → Side-airbag module (LH)	Correct or replace the floor wiring harness.
15, 16	Floor wiring harness (LH) → Side impact sensor (rear) (LH)	Correct or replace the floor wiring harness.
19, 20	Floor wiring harness (LH) → Side impact sensor (front) (LH)	Correct or replace the floor wiring harness.
21	Instrument panel wiring harness → Passenger's air bag off indicator lamp	Correct or replace the instrument panel wiring harness.
23	Instrument panel wiring harness → Junction block (fuse No.3)	Correct or replace the instrument panel wiring harness.
24	Instrument panel wiring harness → Junction block (fuse No.2)	Correct or replace the instrument panel wiring harness.
27, 28	Instrument panel wiring harness → Passenger's (front) air bag module 1st squib side	Correct or replace the instrument panel wiring harness.

Driver's air bag module

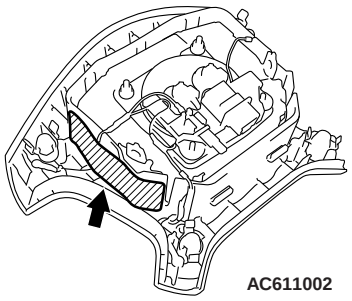

AC611002

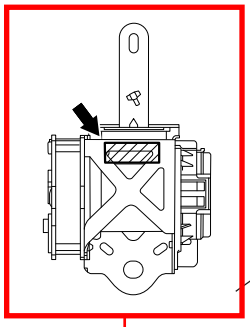

<New>

SRS-ECU

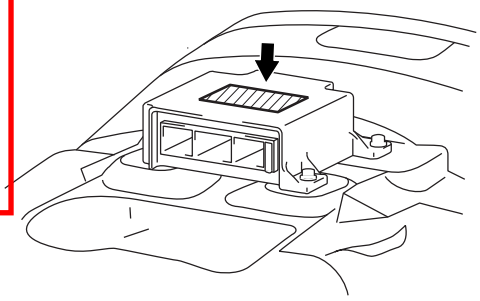

Sunvisor*

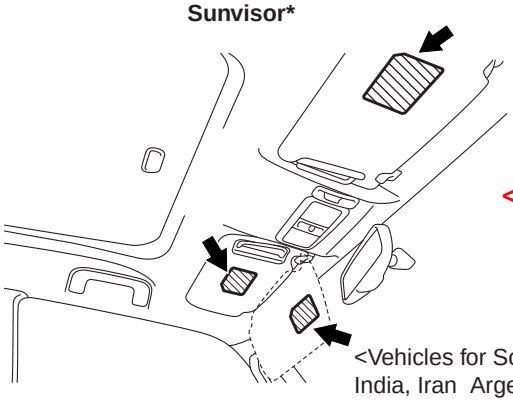

<Old>

Pre-tensioner
(right and left)

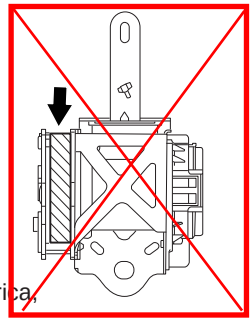

<Vehicles for South Africa, India, Iran Argentina, Hong Kong and Mexico>

Passenger's (front)
air bag module

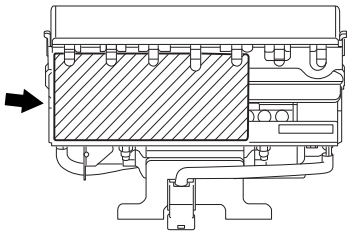

Side-airbag module
(right and left)

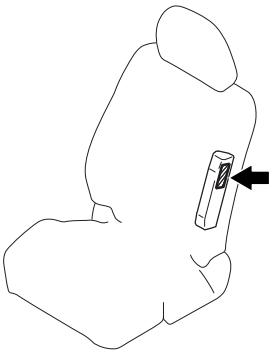

Front impact sensor
(right and left)

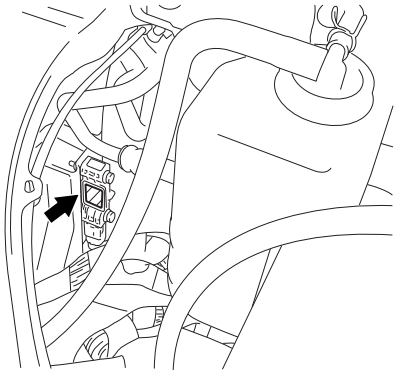

Curtain air bag module
(right and left)

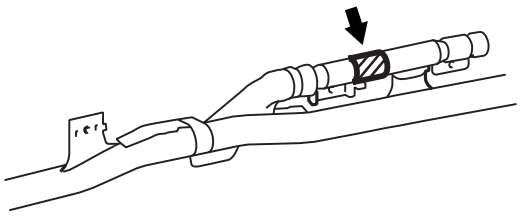

AC606290

Passenger's air bag cut off switch
<Vehicles for India, Iran, Taiwan, Argentina>

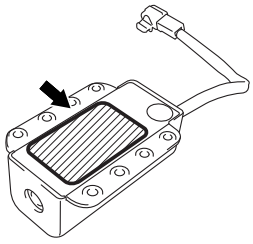

Glove box
<Vehicles for India, Iran, Taiwan, Argentina>

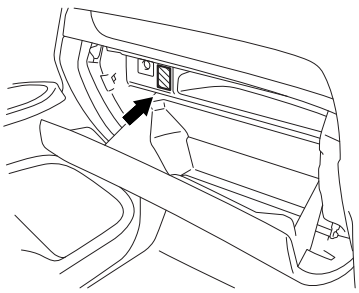

AC803058 AE

Attached sheet 3(3/4)

Driver's air bag module

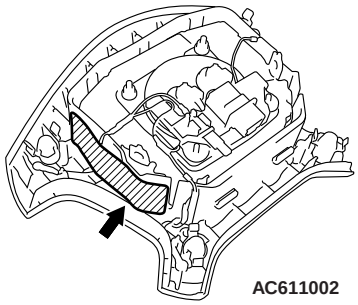

AC611002

Glove box <RHD>

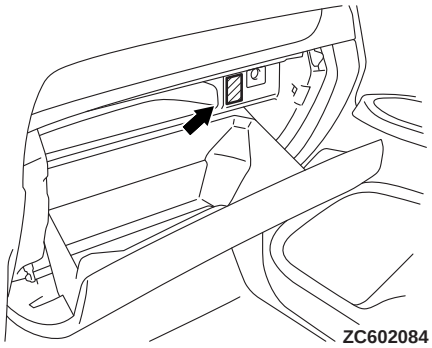

ZC602084

SRS-ECU

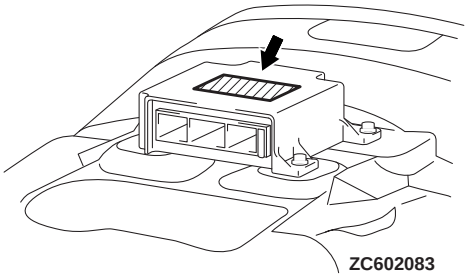

ZC602083

Sunvisor <Standard>*

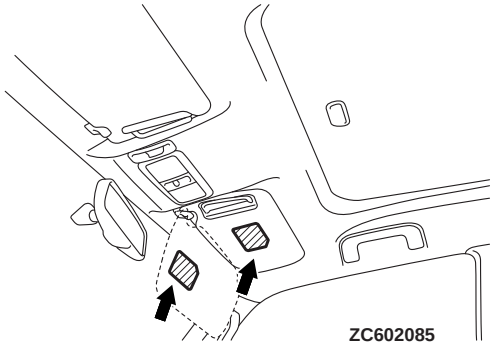

ZC602085

Sunvisor <Optional>*

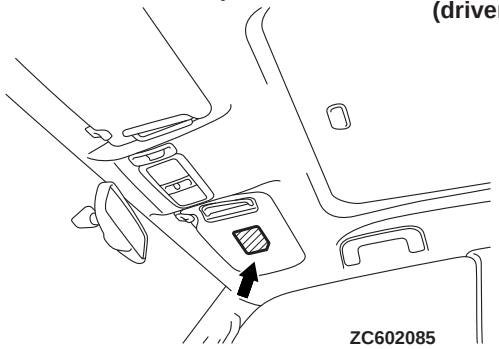

ZC602085

Seat belt pre-tensioner
(driver's and passenger's seat)

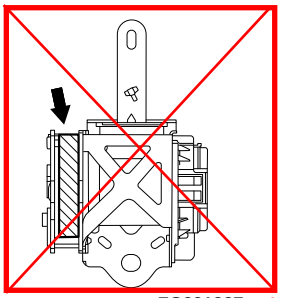

ZC601997

<Old>

Passenger's (front)
air bag module

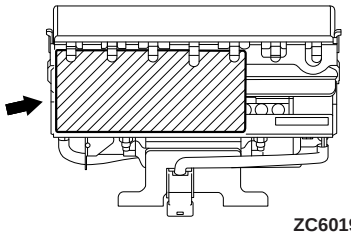

ZC601996

Side-airbag module
(right and left)

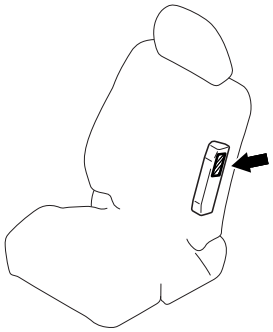

Front impact sensor
(right and left)

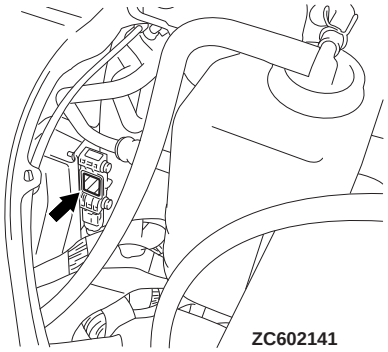

ZC602141

<New>

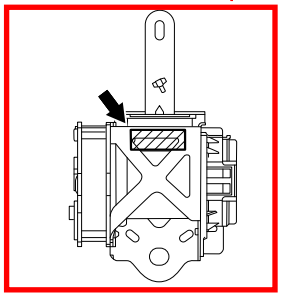

AC803520
ACC01206 AB

Passenger's air bag
cut off switch <RHD>

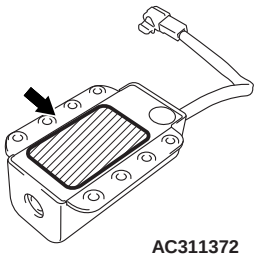

AC311372

Curtain air bag module
(right and left)

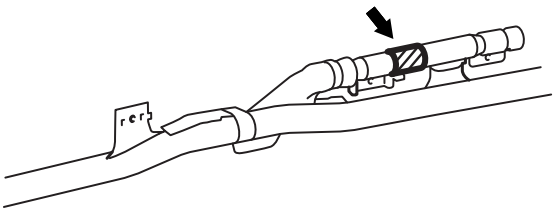

*NOTE: *: indicate LHD vehicles. For RHD vehicles, the specified application position of label is reversed left to right.*

Attached sheet 3(4/4)

Driver's air bag module

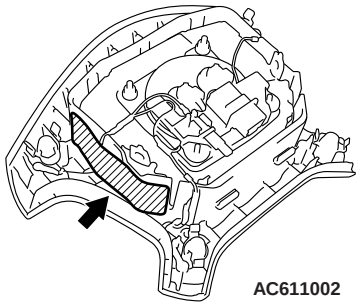

AC611002

SRS-ECU

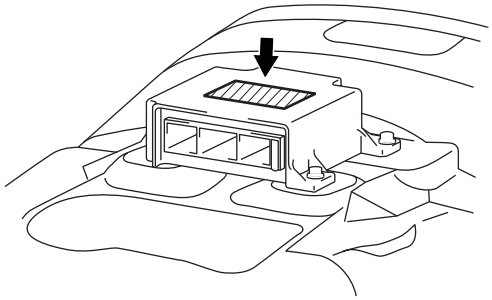

Sunvisor

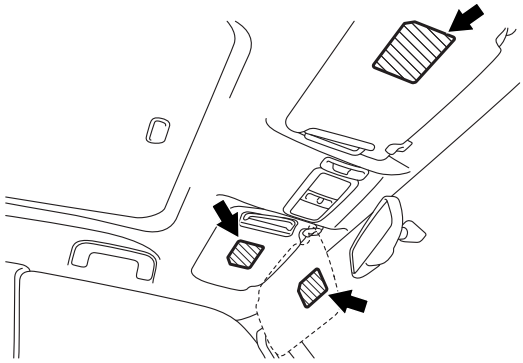

Pre-tensioner
(right and left)

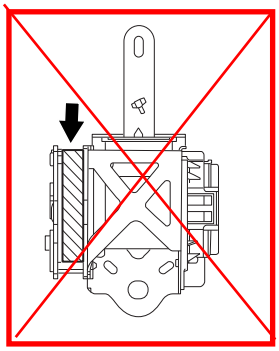

Passenger's (front)
air bag module

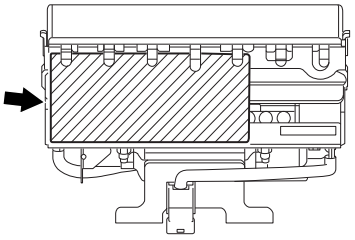

<Old>

Side-airbag module
(right and left)

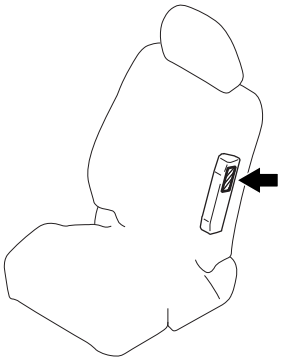

Front impact sensor
(right and left)

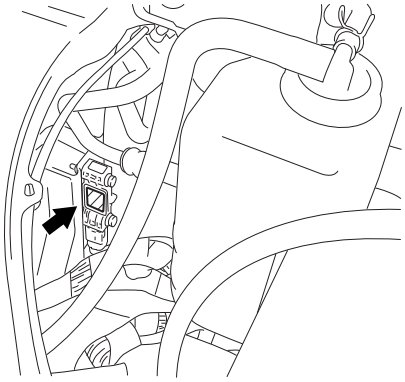

Curtain air bag module
(right and left)

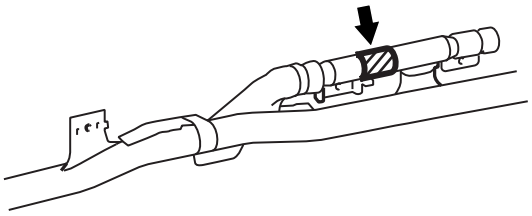

AC803983AC

<New>

