SERVICE BULLETIN

MITSUBISHI MOTORS

GLOBAL AFTER SALES OFFICE, MITSUBISHI MOTORS CORPORATION

PURPOSE : CORRECTION	ISSUE NO. : MSB15EXL52-501	DATE : 2015-10-05
SUBJECT : Errors in writing regarding the inspection, disassembly and reassembly of the seats		<DESTINATION/MODEL> (As shown below) <M/Y> 15-16
GROUP : Gr:52(Interior & SRS Airbag)		L200/L200 SPORTERO/TRITON(KJ0T/KL0T/KK0T)/ PAJERO SPORT(KROW/KS0W)

1. Description :

Please refer to the attached document for the correction of the error in writing existing in the applicable service manual.

2. Affected service manuals :

Applicable manual	Pub. No.	Applicable title (INFO ID)	Contents
2015-2016 L200/L200 SPORTERO/TRITON Workshop Manual	<THAI> DRAFT <MMAL/NZ> AU900436 NZ:DRAFT <G.EXP> PWTE1502R(ENG) PWTS1503R(SPA)	INSPECTION (M522-00-140-65300-01)	Attached sheet 1, 2
		INSPECTION (M523-00-440-97800-01)	Attached sheet 3
		INSPECTION <DOUBLE CAB> (M523-00-440-98900-01)	Attached sheet 4, 5
2016 L200/L200 SPORTERO/TRITON Workshop Manual	<South Africa> DRAFT <Mexico> DRAFT	INSPECTION <CLUB CAB> (M523-00-440-99000-01)	Attached sheet 6
2016 TRITON Workshop Manual	<EU> CKTE16E1-CD(ENG) CKTF16E1-CD(FRE) CKTG16E1-CD(GER) CKTS16E1-CD(SPA) CKTI16E1-CD(ITA) <RUSSIA> N/A	INSPECTION (M523-00-140-38800-01)	Attached sheet 7
		INSPECTION (M523-00-170-03300-01)	Attached sheet 8, 9
2016 PAJERO SPORT Workshop Manual	<THAI> DRAFT	INSPECTION (M522-00-140-67500-01)	Attached sheet 10, 11
		SECOND SEAT ASSEMBLY DISASSEMBLY AND REASSEMBLY (M522-00-250-56700-01)	Attached sheet 12～15

3. About the details :

Please refer to the attached document (Attached sheets 1-15)

INSPECTION

M1522001400653

POWER SEAT SWITCH CONTINUITY CHECK <Vehicles with power seat> <Added>

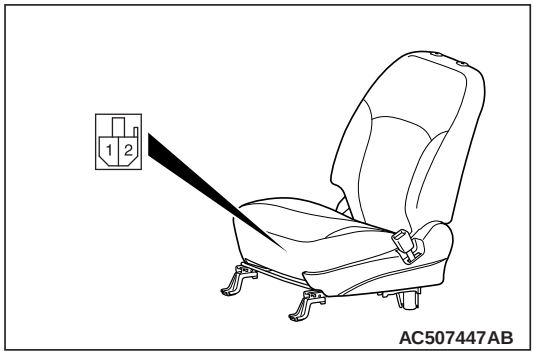

Connect the (+) terminal of the battery to the power seat connector terminal No.2 and the (–) terminal to terminal No.1, and check that the power seat works normally.

Insert the attached sheet 2/15 <Added>

REAR SEAT ASSEMBLY <DOUBLE CAB>

REMOVAL AND INSTALLATION

M1522001801182

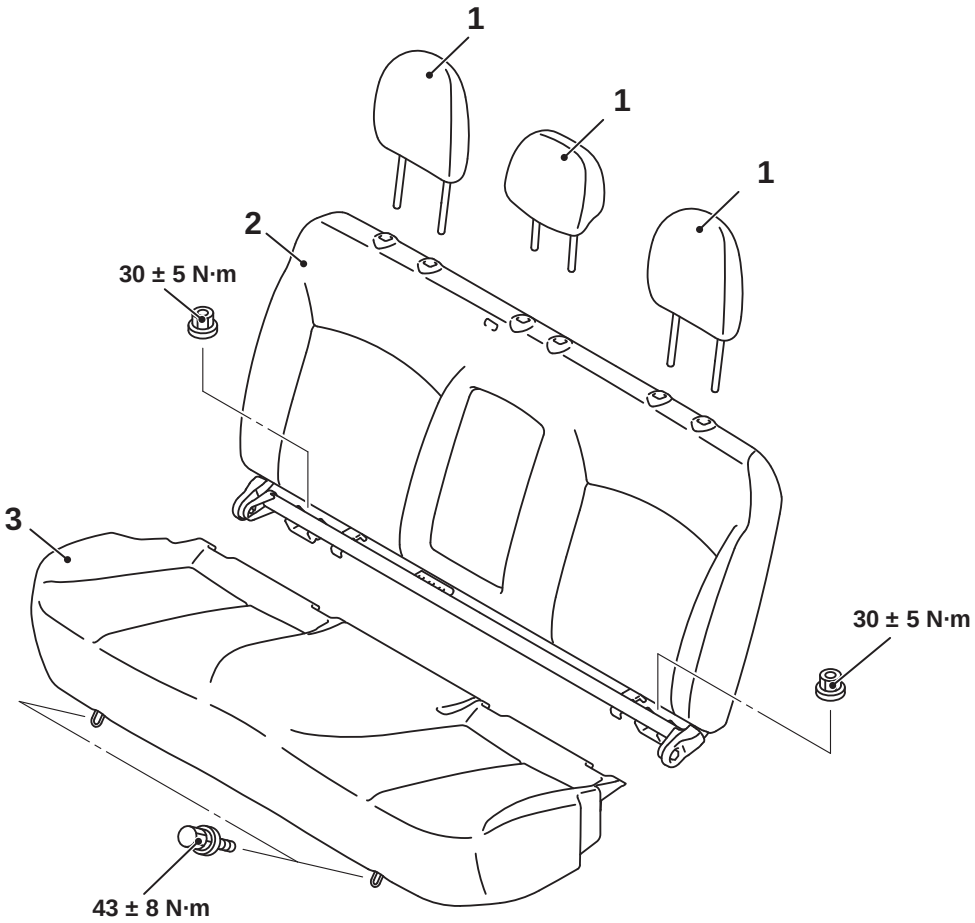

1. Headrestraint

Removal steps

2. Rear seatback assembly
3. Rear seat cushion assembly

<Correct>

FRONT SEAT BELT REMINDER SENSOR CHECK <Passenger's side>

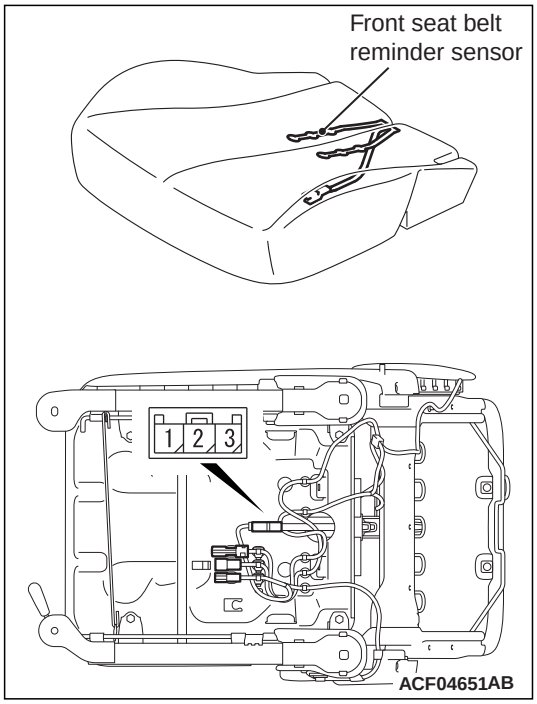

Measure the resistance between terminals.

Item	Tester connection	Specified condition
When a weight of 5 kg is placed on the front seat belt reminder sensor	1 – 3	Less than 100 ohms
When no weight is placed on the front seat belt reminder sensor	1 – 3	Open circuit

INSPECTION

M1523004400978

SEAT BELT BUCKLE SWITCH CONTINUITY CHECK (DRIVER'S SIDE)

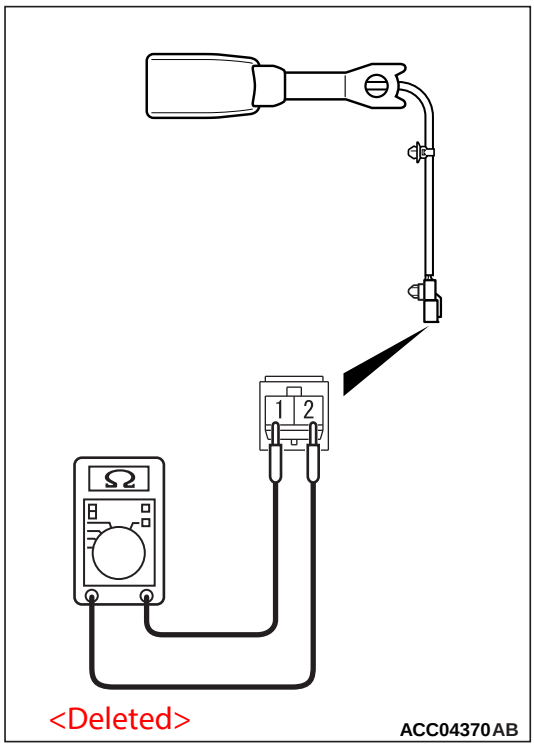

If there is no continuity when the outer seatbelt is fastened, replace the inner seatbelt.

Item	Tester connection	Specified condition
Fastened seat belt	1 – 2	Open circuit
Unfastened seat belt		Continuity exists (2Ω or less)

SEAT BELT BUCKLE SWITCH CONTINUITY CHECK (PASSENGER'S SIDE)

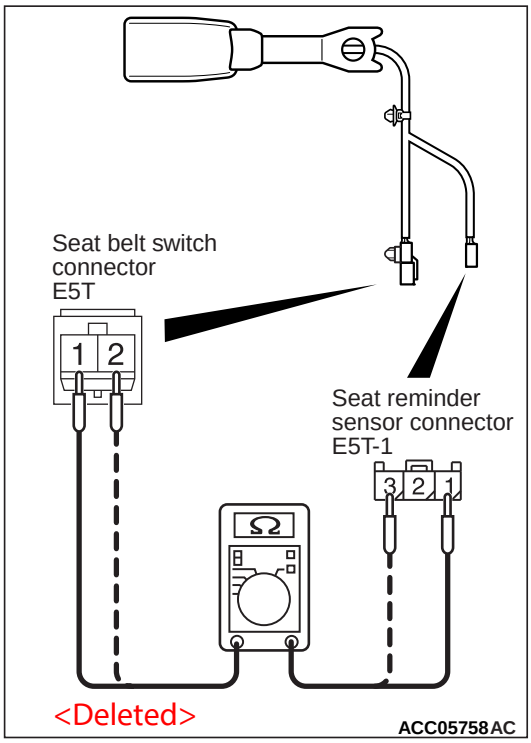

If there is no continuity when the outer seatbelt is fastened, replace the inner seatbelt.

Item	Tester connection	Specified condition
–	Connector E5T (terminal No.1) – E5T-1 (terminal No.1)	Continuity exists (2Ω or less)
Fastened seat belt	Connector E5T (terminal No.2) – E5T-1 (terminal No.3)	Open circuit
Unfastened seat belt		Continuity exists (2Ω or less)

SEAT BELT BUCKLE SWITCH CONTINUITY CHECK (RH)

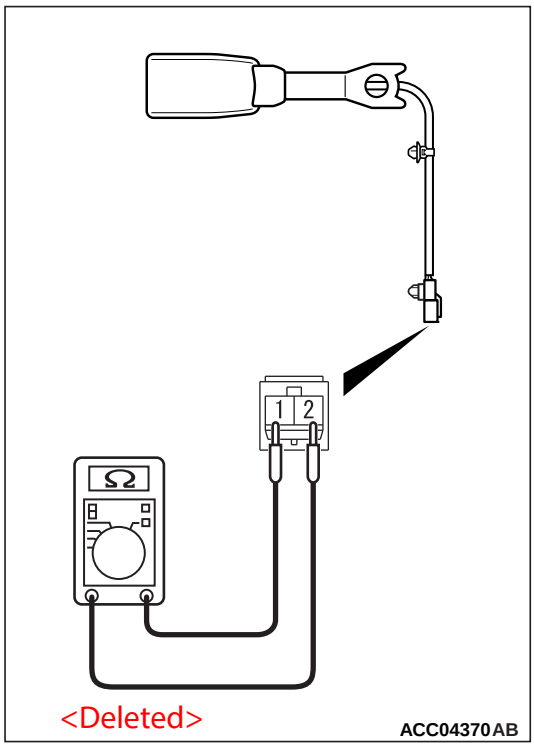

If there is no continuity when the outer seatbelt is fastened, replace the inner seatbelt.

Item	Tester connection	Specified condition
Fastened seat belt	1 – 2	Open circuit
Unfastened seat belt		Continuity exists (2Ω or less)

SEAT BELT BUCKLE SWITCH CONTINUITY CHECK (LH)

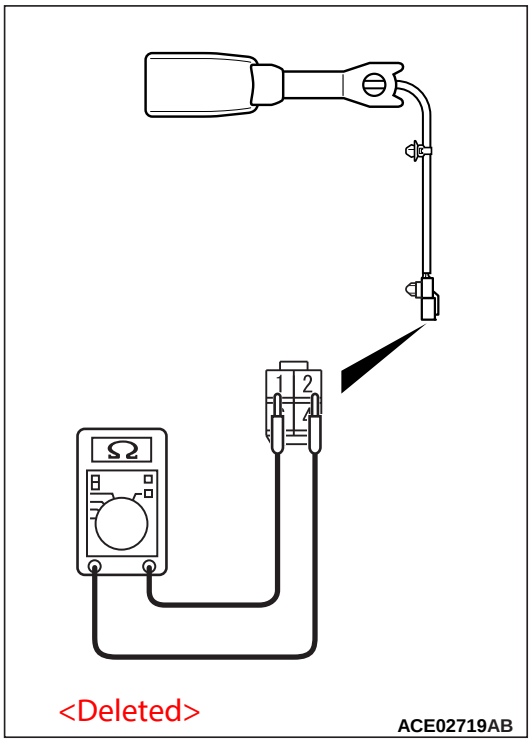

If there is no continuity when the outer seatbelt is fastened, replace the inner seatbelt.

Item	Tester connection	Specified condition
Fastened seat belt	1 – 2	Open circuit
Unfastened seat belt		Continuity exists (2Ω or less)

SEAT BELT BUCKLE SWITCH CONTINUITY CHECK (CENTRE)

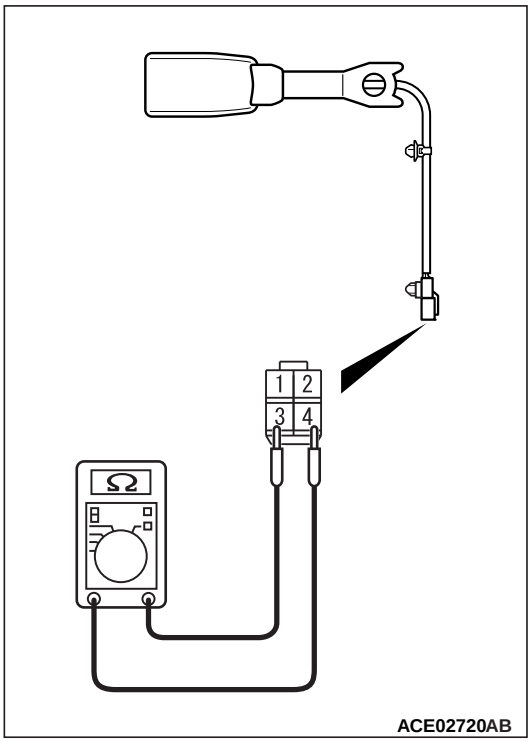

<Deleted>
If there is no continuity when the outer seatbelt is fastened, replace the inner seatbelt.

Item	Tester connection	Specified condition
Fastened seat belt	3 – 4	Open circuit
Unfastened seat belt		Continuity exists (2Ω or less)

<Deleted>

REAR SEAT BELT BUCKLE SWITCH CONTINUITY CHECK

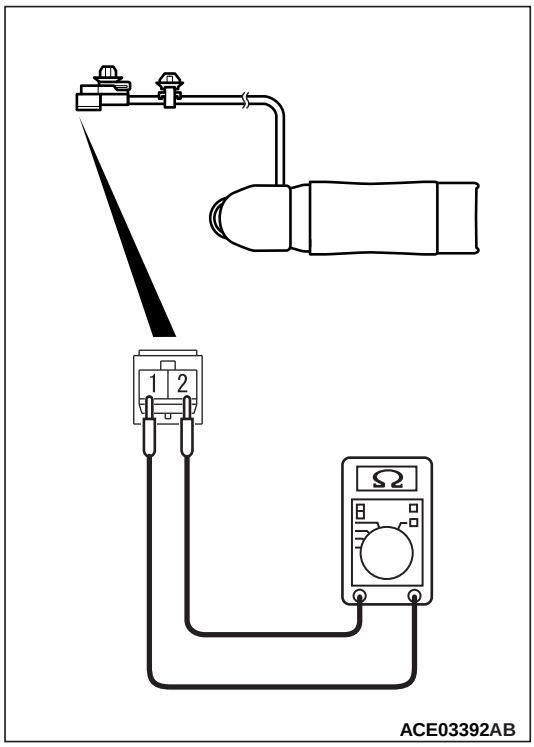

If there is no continuity when the outer seatbelt is fastened, replace the inner seatbelt.

Item	Tester connection	Specified condition
Fastened seat belt	1 – 2	Open circuit
Unfastened seat belt		Continuity exists (2Ω or less)

FRONT SEAT BELT

REMOVAL AND INSTALLATION

M1523001301726

⚠ CAUTION

Before removing and installing the seat belts with pre-tensioner, refer to GROUP 52B – SRS Service Precautions and Seat Belt with Pre-tensioner .

For removal and installation, refer to GROUP 52B – Seat Belt with Pre-tensioner .

INSPECTION

M1523001400388

FRONT SEAT BELT SWITCH CONTINUITY CHECK (DRIVER'S SIDE)

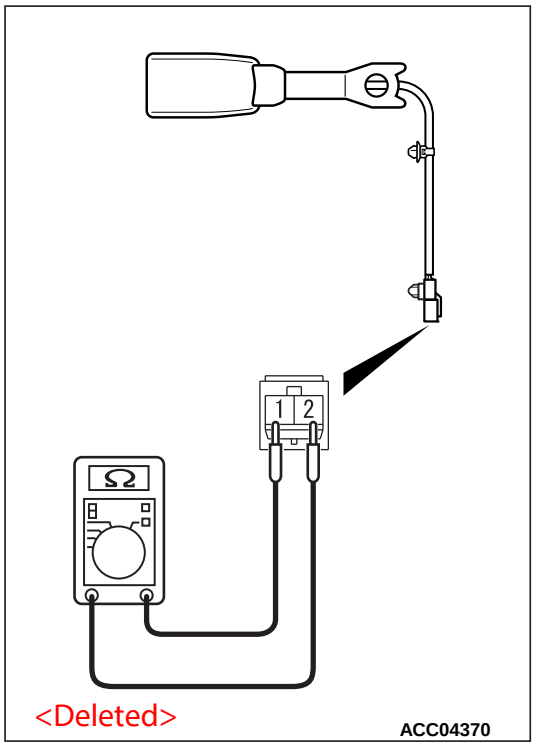

If there is no continuity when the outer seatbelt is fastened, replace the front seat belt inner.

Item	Tester connection	Specified condition
Fastened seat belt	1 – 2	Open circuit
Unfastened seat belt		Continuity exists (2Ω or less)

FRONT SEAT BELT SWITCH CONTINUITY CHECK (PASSENGER'S SIDE)

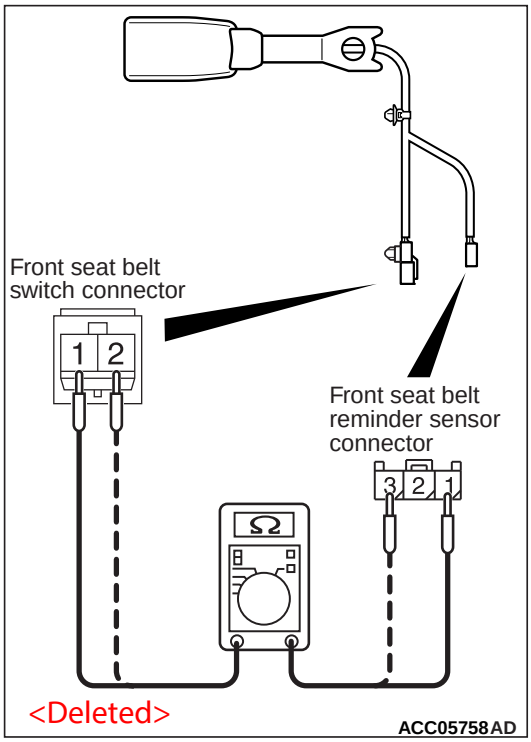

If there is no continuity when the outer seatbelt is fastened, replace the front seat belt inner.

Item	Tester connection	Specified condition
–	Front seat belt switch connector (terminal No.1) – Front seat belt reminder sensor connector (terminal No.1)	Continuity exists (2Ω or less)

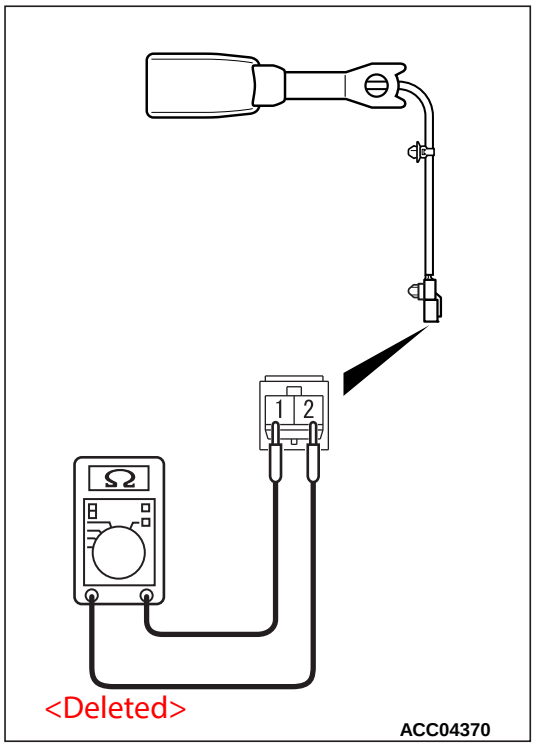

Item	Tester connection	Specified condition
Fastened seat belt	1 – 2	Open circuit
Unfastened seat belt		Continuity exists (2 Ω or less)

If there is ~~no~~ continuity when the outer seatbelt is fastened, replace the inner seatbelt.

<DOUBLE CAB>

REAR SEAT BELT SWITCH CONTINUITY CHECK (RH)

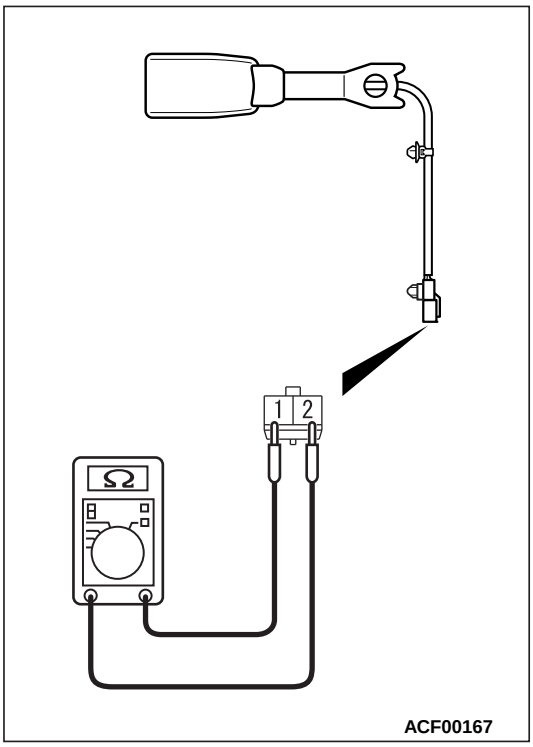

<Deleted>

If there is ~~no~~ continuity when the outer seatbelt is fastened, replace the inner seatbelt.

Item	Tester connection	Specified condition
Fastened seat belt	1 – 2	Open circuit
Unfastened seat belt		Continuity exists (2 Ω or less)

REAR SEAT BELT SWITCH CONTINUITY CHECK (LH)

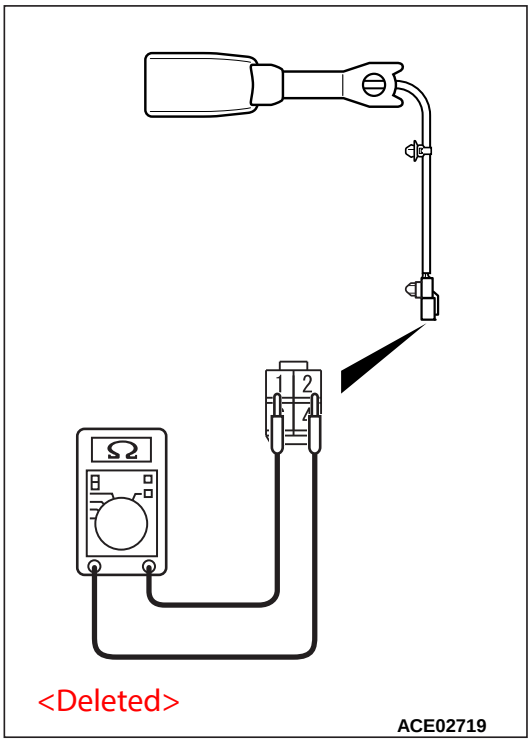

If there is no continuity when the outer seatbelt is fastened, replace the inner seatbelt.

Item	Tester connection	Specified condition
Fastened seat belt	1 – 2	Open circuit
Unfastened seat belt		Continuity exists (2 Ω or less)

REAR SEAT BELT SWITCH CONTINUITY CHECK (CENTRE)

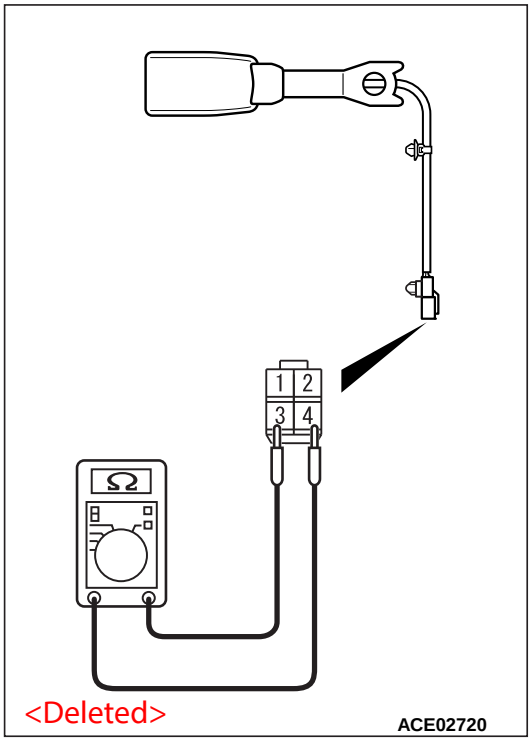

If there is no continuity when the outer seatbelt is fastened, replace the inner seatbelt.

Item	Tester connection	Specified condition
Fastened seat belt	3 – 4	Open circuit
Unfastened seat belt		Continuity exists (2 Ω or less)

INSPECTION

POWER SEAT ASSEMBLY CONTINUITY CHECK <Vehicles with power seat> <Added>

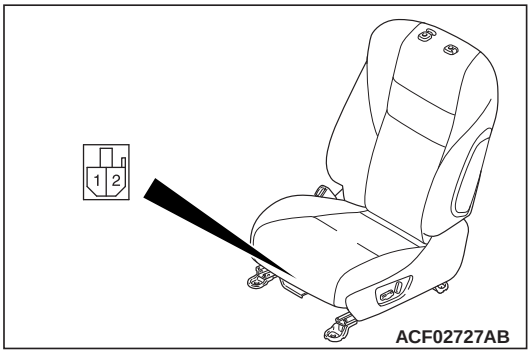

Connect the (+) terminal of the battery to the power seat connector terminal No.2 and the (–) terminal to terminal No.1, and check that the power seat works normally.

<Added>
Insert the attached sheet 11/15

<Correct>

FRONT SEAT BELT REMINDER SENSOR CHECK <Passenger's side>

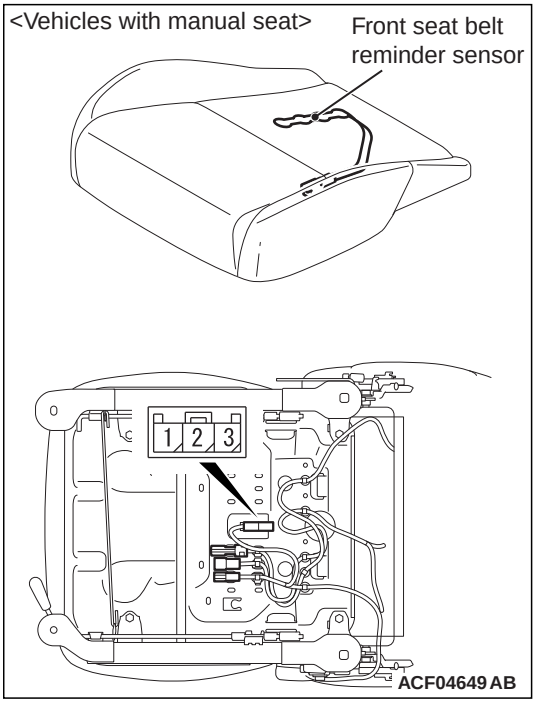

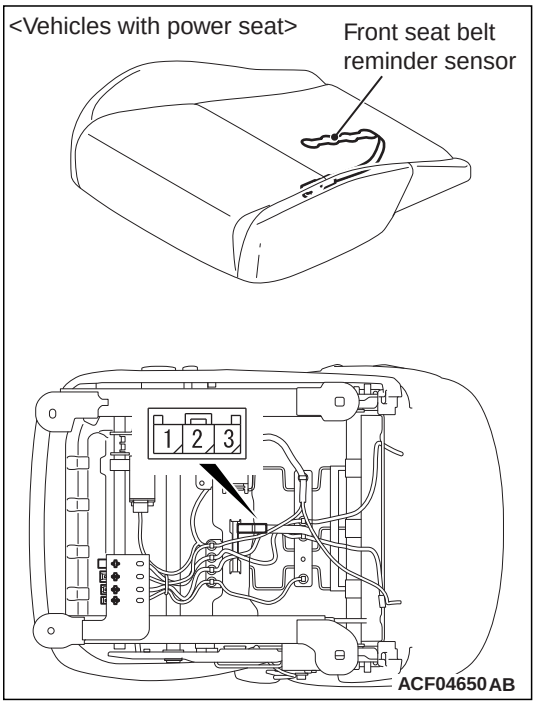

Measure the resistance between terminals.

Item	Tester connection	Specified condition
When a weight of 5 kg is placed on the front seat belt reminder sensor	1 – 3	Less than 100 ohms
When no weight is placed on the front seat belt reminder sensor	1 – 3	Open circuit

Attached sheet 12/15

Disassembly steps (Continued)

17. Second seat lever control cable
18. Second seat latch
19. Second seat cushion frame
20. Second seat reclining adjuster cover inner
21. Second seatback assembly
22. Second seat band
23. Second seatback armrest board
24. Second seatback cup holder
25. Second seatback armrest
26. Second seatback bushing
27. Second seat folding knob garnish
28. Second seat folding lever knob
29. Second seat protector

<<C>>

30. Second seat headrest guide
31. Second seat cover ring
32. Second seatback cover
33. Second seatback pad assembly
34. Second seat nut
35. Second seat washer

<Deleted>

<<B>> >>B<<
<<B>> >>B<<
<<B>> >>B<<

36. Reclining cable inner
37. Reclining cable outer
38. Reclining link cable assembly
39. Second seatback frame

DISASSEMBLY SERVICE POINTS

<<A>> REMOVAL OF SECOND SEAT LEVER CONTROL CABLE

<Incorrect>

SECOND SEAT LEVER CONTROL CABLE REMOVAL

<Correct>

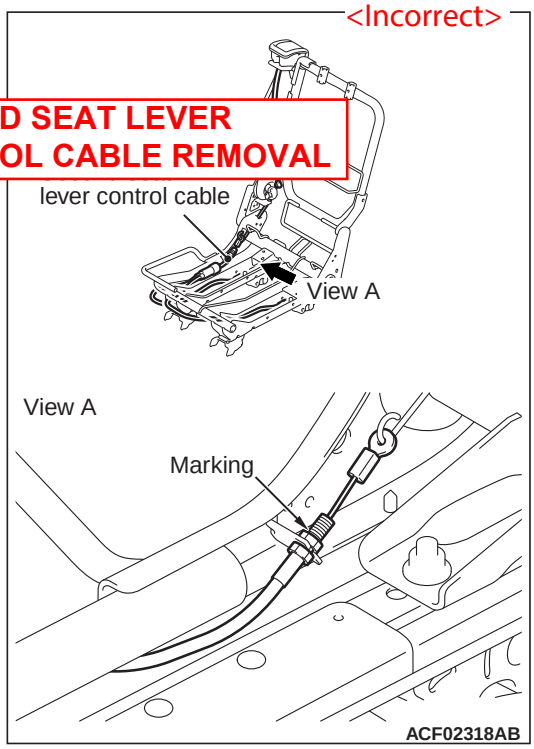

Put a mark in the position shown in view A to record the protrusion of the screw.

<<B>> RECLINING CABLE INNER/RECLINING CABLE OUTER/RECLINING LINK CABLE ASSEMBLY/SECOND SEAT LEVER CONTROL CABLE REMOVAL

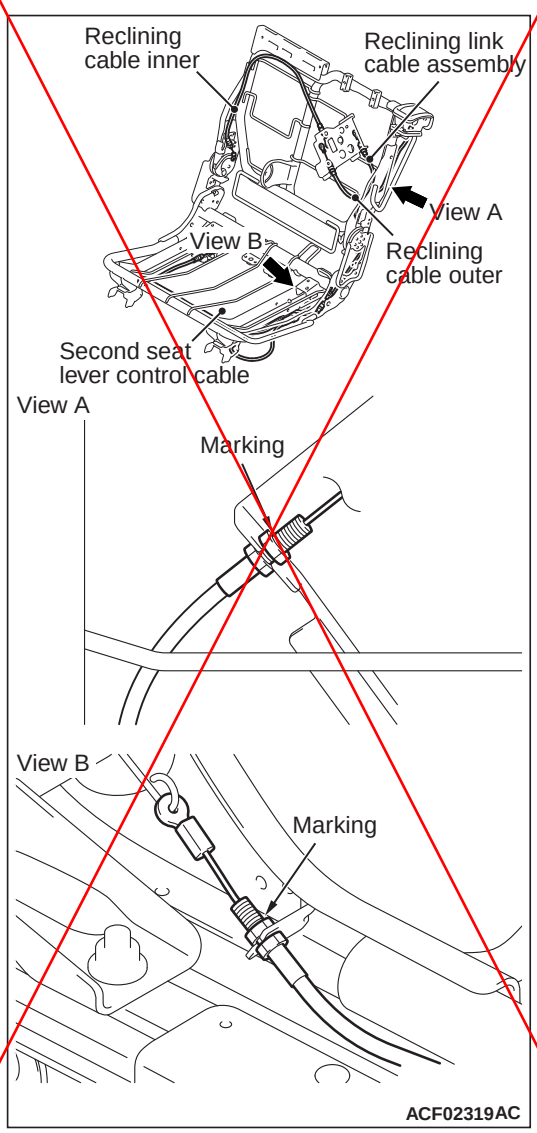

Put a mark in the position shown in view A or view B to record the protrusion of the screw.

<Incorrect>

<<C>> HEADRESTRAINT GUIDE REMOVAL

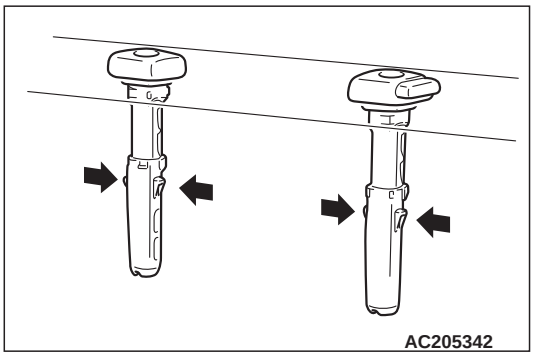

Remove the headrest guides while pushing the on both sides inward.

<Correct>

Insert the attached sheet 13/15

<Correct>

<<B>> SECOND SEAT LEVER CONTROL CABLE REMOVAL

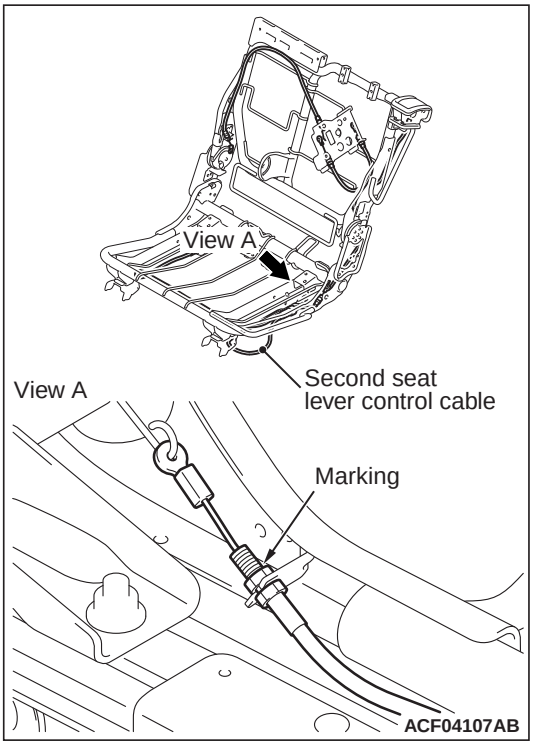

Put a mark in the position shown in view A to record the protrusion of the screw.

Attached sheet 14/15

REASSEMBLY SERVICE POINTS

>>A<< SECOND SEAT LEVER CONTROL CABLE INSTALLATION

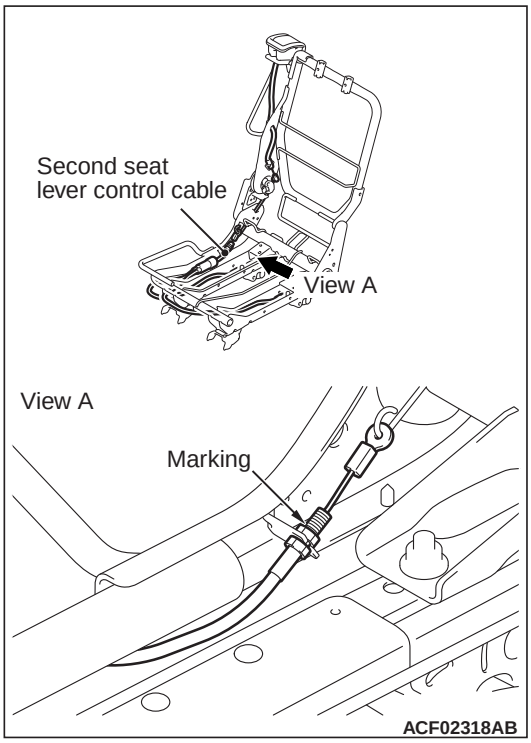

<Deleted>

~~1.~~ When installing the second seat lever control cable, protrude the screws to the position marked during the removal and fix them. Then, tumble the seatback and check that the control cable is fully released.

>>B<< RECLINING CABLE INNER/RECLINING CABLE OUTER/RECLINING LINK CABLE ASSEMBLY/SECOND SEAT LEVER CONTROL CABLE INSTALLATION

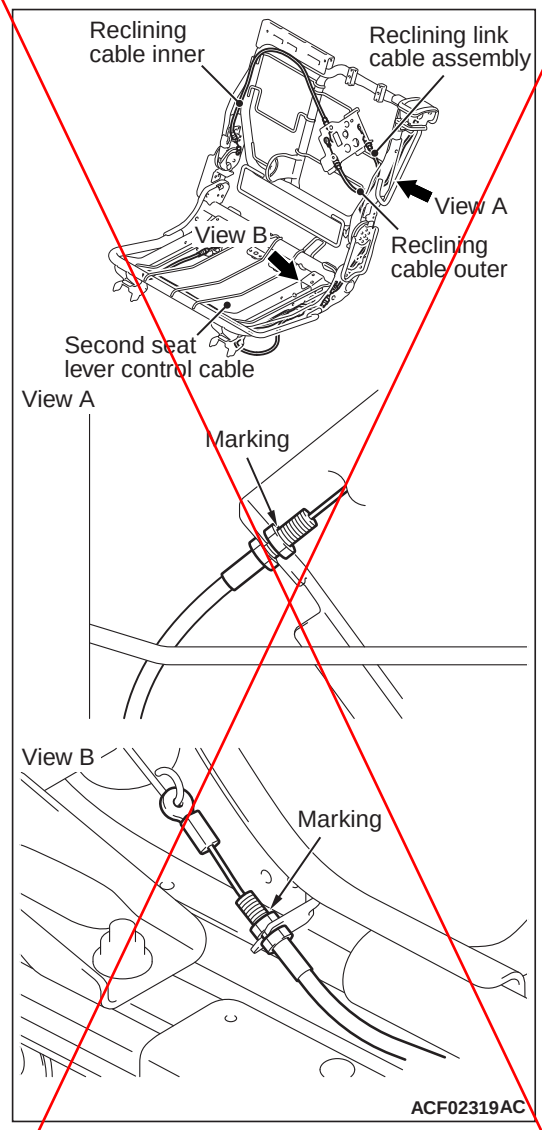

1. When installing the reclining cable inner, reclining cable outer, reclining link cable assembly, second seat lever control cable, protrude the screws to the position marked during the removal and fix them. Then, tumble the seatback and check that the control cable is fully released.

<Incorrect>

Insert the attached sheet 15/15

<Correct>

<Correct>

>>B<< SECOND SEAT LEVER CONTROL CABLE INSTALLATION

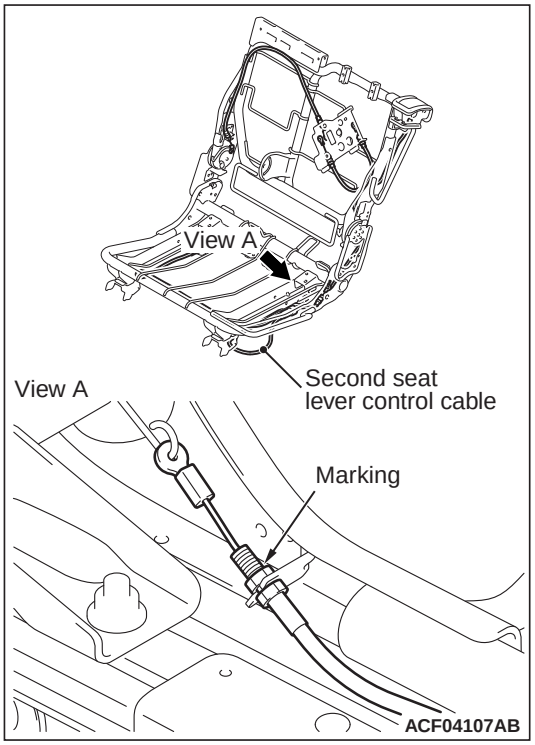

When installing the second seat lever control cable, protrude the screws to the position marked during the removal and fix them. Then, tumble the seatback and check that the control cable is fully released.