SERVICE BULLETIN

MITSUBISHI MOTORS

GLOBAL AFTER SALES OFFICE, MITSUBISHI MOTORS CORPORATION

PURPOSE : CORRECTION	ISSUE NO. : MSB-15EXL52-502A	DATE : 2016-01-20
SUBJECT : Error in writing of the maintenance procedures of the front seatback(with side-airbag module)		<DESTINATION/MODEL> (EU/RUSSIA/MMAL/NZ) <M/Y> 09-15
GROUP : Gr:52(Interior & SRS Airbag)		L200/TRITON(KA0T/KB0T)/PAJERO SPORT/CHALLENGER(KH8W)

1. Description :

Please refer to the attached document for the correction of the error in writing existing in the applicable service manual.

- Side-airbag module assembly(Incorrect) → Front seatback frame(Correct)

2. Affected service manuals :

Please refer to the attached document (Attached sheet 1)

3. About the details :

Please refer to the attached document (Attached sheets 2-6)

Revision history

		MSB No.	Issued Date	
Original		—	—	
Revision	A	MSB-15EXL52-502A	2016/1/20	※This time

※This service bulletin starts from the revision A version(MSB-15EXL52-502A).

Attached sheet 1 (1/2)

L200
<EU/RUSSIA>

Applicable manual	Pub. No.	Applicable title (INFO ID)	Contents
2009 L200 Workshop Manual	CCRE09E1-CD (ENG) CCRF09E1-CD (FRE) CCRG09E1-CD (GER) CCRS09E1-CD (SPA) CCRI09E1-CD (ITA) RUSSIA:N/A	SIDE-AIRBAG MODULE(S) REMOVAL AND INSTALLATION (M524-03-650-39700-01)	Attached Sheet 2
2010 L200 Workshop Manual	CCRE10E1-CD (ENG) CCRF10E1-CD (FRE) CCRG10E1-CD (GER) CCRS10E1-CD (SPA) CCRI10E1-CD (ITA) RUSSIA:N/A	SIDE-AIRBAG MODULE(S) REMOVAL AND INSTALLATION (M524-03-650-52400-01)	Attached Sheet 4
2011 L200 Workshop Manual	CCRE11E1-CD (ENG) CCRF11E1-CD (FRE) CCRG11E1-CD (GER) CCRS11E1-CD (SPA) CCRI11E1-CD (ITA) RUSSIA:N/A	SIDE-AIRBAG MODULE(S) REMOVAL AND INSTALLATION (M524-03-650-52401-01)	Attached Sheet 4
2012 L200 Workshop Manual	CCRE12E1-CD (ENG) CCRF12E1-CD (FRE) CCRG12E1-CD (GER) CCRS12E1-CD (SPA) CCRI12E1-CD (ITA) RUSSIA:N/A	SIDE-AIRBAG MODULE(S) REMOVAL AND INSTALLATION (M524-03-650-52401-01)	Attached Sheet 4
2013 L200 Workshop Manual	CKTE13E1-CD (ENG) CKTF13E1-CD (FRE) CKTG13E1-CD (GER) CKTS13E1-CD (SPA) CKTI13E1-CD (ITA) RUSSIA:N/A	SIDE-AIRBAG MODULE(S) REMOVAL AND INSTALLATION (M524-03-650-52401-01)	Attached Sheet 4
2014 L200 Workshop Manual	CKTE14E1-CD (ENG) CKTF14E1-CD (FRE) CKTG14E1-CD (GER) CKTS14E1-CD (SPA) CKTI14E1-CD (ITA) RUSSIA:N/A	SIDE-AIRBAG MODULE(S) REMOVAL AND INSTALLATION (M524-03-650-52401-01)	Attached Sheet 4
2015 L200 Workshop Manual	CKTE15E1-CD (ENG) CKTF15E1-CD (FRE) CKTG15E1-CD (GER) CKTS15E1-CD (SPA) CKTI15E1-CD (ITA) RUSSIA:N/A	SIDE-AIRBAG MODULE(S) REMOVAL AND INSTALLATION (M524-03-650-52401-01)	Attached Sheet 4

TRITON
<AUSTRALIA/NEW ZEALAND>

Applicable manual	Pub. No.	Applicable title (INFO ID)	Contents
2009 TRITON Workshop Manual	MR936476 NZ:DRAFT	SIDE-AIRBAG MODULE(S) REMOVAL AND INSTALLATION (M524-03-650-24500-01)	Attached Sheet 3
2010 TRITON Workshop Manual	MR936949 NZ:DRAFT	SIDE-AIRBAG MODULE(S) REMOVAL AND INSTALLATION (M524-03-650-54600-01)	Attached Sheet 5

PAJERO SPORT
<RUSSIA>

Applicable manual	Pub. No.	Applicable title (INFO ID)	Content
2009 NATIVA/ PAJERO SPORT/ MONTERO SPORT Workshop Manual	PWJE0808R-2 (ENG) PWJS0809R-2 (SPA)	SIDE-AIRBAG MODULE(S) REMOVAL AND INSTALLATION (M524-03-650-44900-01)	Attached Sheet 6
2010 NATIVA/ PAJERO SPORT/ MONTERO SPORT Workshop Manual	PWJE0910R (ENG) PWJS0911R (SPA)	SIDE-AIRBAG MODULE(S) REMOVAL AND INSTALLATION (M524-03-650-64300-01)	Attached Sheet 6
2011 NATIVA/ PAJERO SPORT/ MONTERO SPORT Workshop Manual	PWJE1004R (ENG) PWJS1005R (SPA)	SIDE-AIRBAG MODULE(S) REMOVAL AND INSTALLATION (M524-03-650-64300-01)	Attached Sheet 6

CHALLENGER
<AUSTRALIA/NEW ZEALAND>

Applicable manual	Pub. No.	Applicable title (INFO ID)	Content
2010 CHALLENGER Workshop Manual	MR936972 NZ:DRAFT	SIDE-AIRBAG MODULE(S) REMOVAL AND INSTALLATION (M524-03-650-64300-01)	Attached Sheet 6
2011 CHALLENGER Workshop Manual	AU900055 NZ:DRAFT	SIDE-AIRBAG MODULE(S) REMOVAL AND INSTALLATION (M524-03-650-64300-01)	Attached Sheet 6

Attached sheet 2 (1/2)

SIDE-AIRBAG MODULE(S) <VEHICLES WITH SIDE-AIRBAG AND CURTAIN AIR BAG>

REMOVAL AND INSTALLATION

M1524036500397

<Correct>

Store the front seatback frame (with side-airbag module) on a flat surface. Also, do not put anything on it.

⚠ WARNING

- ***Disconnect the negative battery terminal and wait for 60 seconds or more before starting work. Furthermore, the disconnected battery terminal should be covered with tape to insulate it.***
- ***Never attempt to disassemble or repair the side-airbag modules. If faulty, replace it.***
- ***Do not drop the side-airbag modules or allow contact with water, grease or oil. Replace it if a dent, crack, deformation or rust is detected.***

<Incorrect>

- ~~***The removed side-airbag module should be stored in a clean, dry place with the deployment surface facing up. Do not place anything on top of it.***~~
- ***Do not expose the side-airbag modules to temperatures over 93 °C.***

<Incorrect>

- ~~***After deployment of an side-airbag, the side-airbag module has been replaced with a new one.***~~
- ***Wear gloves and safety glasses when handling side-airbag that have already deployed.***
- ***An undeployed side-airbag module should only be disposed of in accordance with the procedures (Refer to P.52B-271).***

<Added>

•When replacing the side-airbag module, replace the front seatback frame.

After the side-airbag deployment, replace the front seatback frame (with side-airbag module) with the new one.

Pre-removal Operation
- Turn the ignition switch to the LOCK (OFF) position.
- Disconnect the negative (–) battery terminal.

<Incorrect>

<Correct>

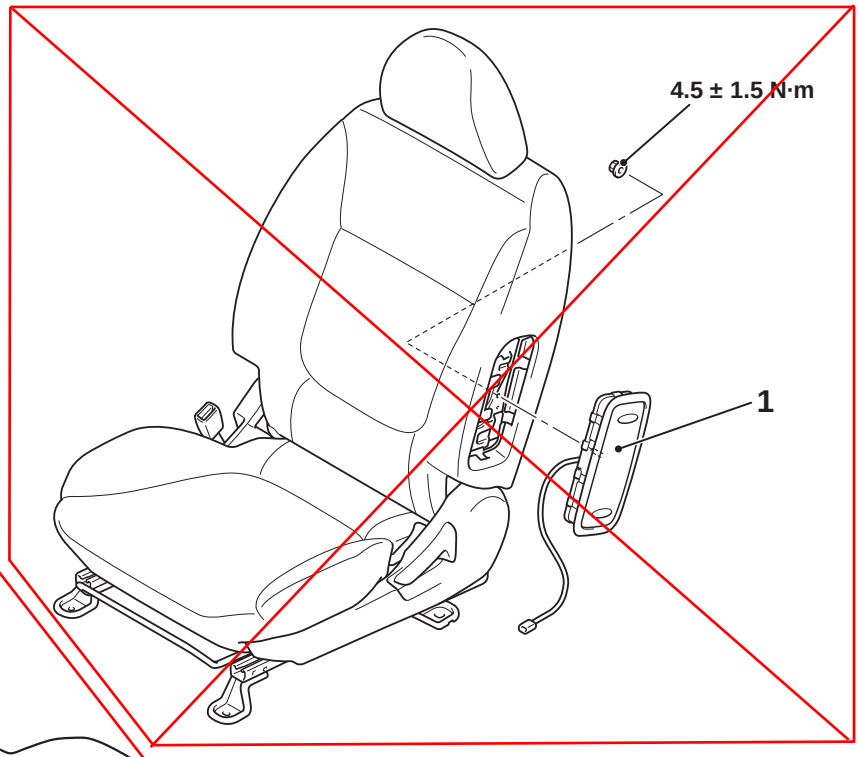

<Correct>

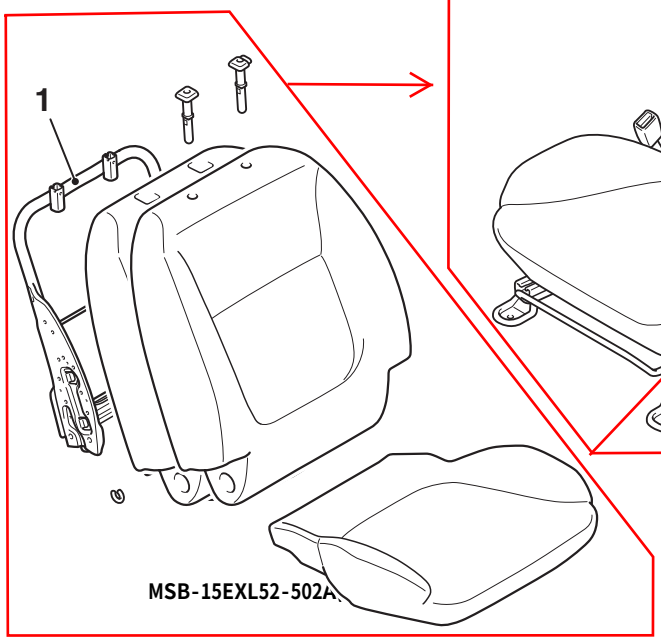

AC800583AB

MSB-15EXL52-502A

<Correct>

Removal step
- Front seat assembly (Refer to GROUP 52A, Front Seat Assembly)

<Incorrect>

<<A>> 1. Side-airbag module assembly

Installation step

<Deleted> >>A<< • Pre-installation inspection

<Incorrect>

1. Side-airbag module assembly
- Front seat assembly (Refer to GROUP 52A, Front Seat Assembly)

<Deleted> >>B<< • Post-installation inspection

REMOVAL SERVICE POINT

<<A>> SIDE-AIRBAG MODULE ASSEMBLY REMOVAL

⚠ CAUTION

- **Never use an electric tester to diagnose the side-airbag module circuit. Never attempt to disassemble the side-airbag module.**
- **Store the removed side-airbag in a clean and dry place.**
- **When discarding the side-airbag module, discard after deploying the side-airbag as specified in the service procedure (Refer to P.52B-271).**

1. Turn up the lower side of the seat back cover.
2. Remove the seat cushion side side-airbag module harness clamp.
3. Remove the seat back cover fastener.
4. Remove the seat back side side-airbag module harness clamp.
5. Remove the side-airbag module harness.

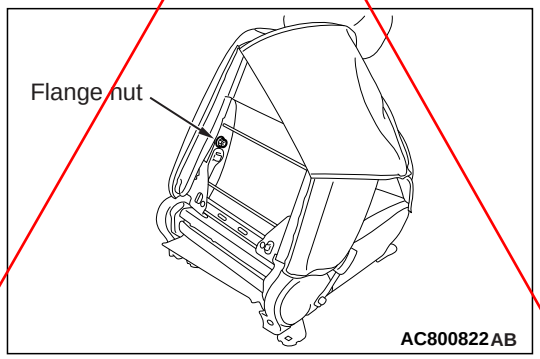

6. Remove the side-airbag module mounting nut.

INSTALLATION SERVICE POINTS

>>A<< PRE-INSTALLATION INSPECTION

1. Before the installation, check the side-airbag module (Refer to P.52B-260).

NOTE: Even when installing a new side-airbag module assembly, perform an inspection before the installation.

2. Connect the negative (–) battery terminal.

⚠ CAUTION

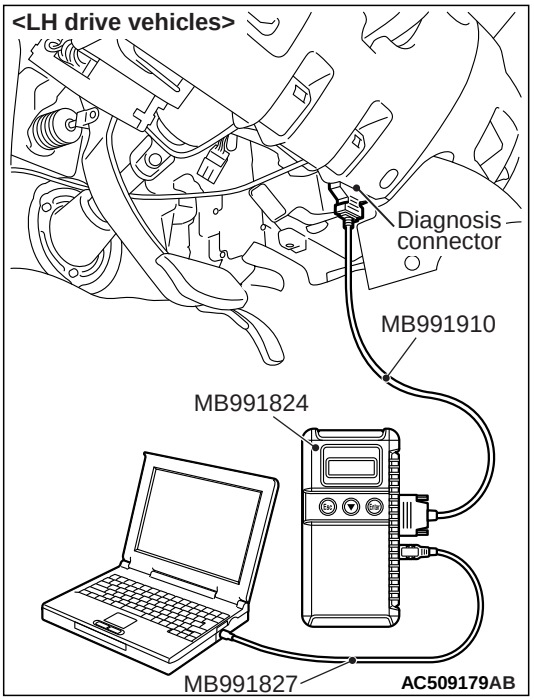

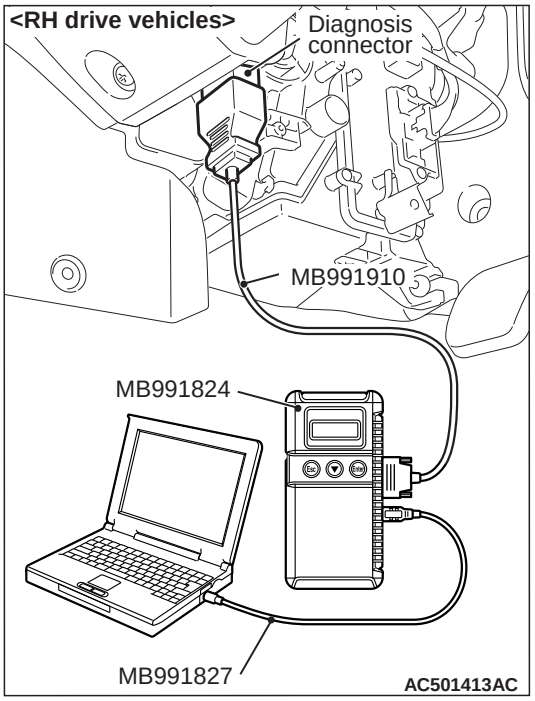

Be sure to turn the ignition key to the LOCK (OFF) position when connecting or disconnecting M.U.T.-III.

3. Connect M.U.T.-III to the diagnosis connector (16 pin).
4. Turn the ignition switch to the ON position.

Attached sheet 3 (1/2)

SIDE-AIRBAG MODULE(S) <VEHICLES WITH SIDE-AIRBAG AND CURTAIN AIR BAG>

<Correct>

REMOVAL AND INSTALLATION

M1524036500245

Store the front seatback frame (with side-airbag module) on a flat surface. Also, do not put anything on it.

⚠ WARNING

- ***Disconnect the negative battery terminal and wait for 60 seconds or more before starting work. Furthermore, the disconnected battery terminal should be covered with tape to insulate it.***
- ***Never attempt to disassemble or repair the side-airbag modules. If faulty, replace it.***
- ***Do not drop the side-airbag modules or allow contact with water, grease or oil. Replace it if a dent, crack, deformation or rust is detected.***

<Incorrect>

- ~~***The removed side-airbag module should be stored in a clean, dry place with the deployment surface facing up. Do not place anything on top of it.***~~
- ***Do not expose the side-airbag modules to temperatures over 93 °C.***

<Incorrect>

- ~~***After deployment of an side-airbag, the side-airbag module has been replaced with a new one.***~~
- ***Wear gloves and safety glasses when handling side-airbag that have already deployed.***
- ***An undeployed side-airbag module should only be disposed of in accordance with the procedures (Refer to P.52B-252).***

<Added>

•When replacing the side-airbag module, replace the front seatback frame.

Pre-removal Operation
- Turn the ignition switch to the LOCK (OFF) position.
- Disconnect the negative (–) battery terminal.

After the side-airbag deployment, replace the front seatback frame (with side-airbag module) with the new one.

<Correct>

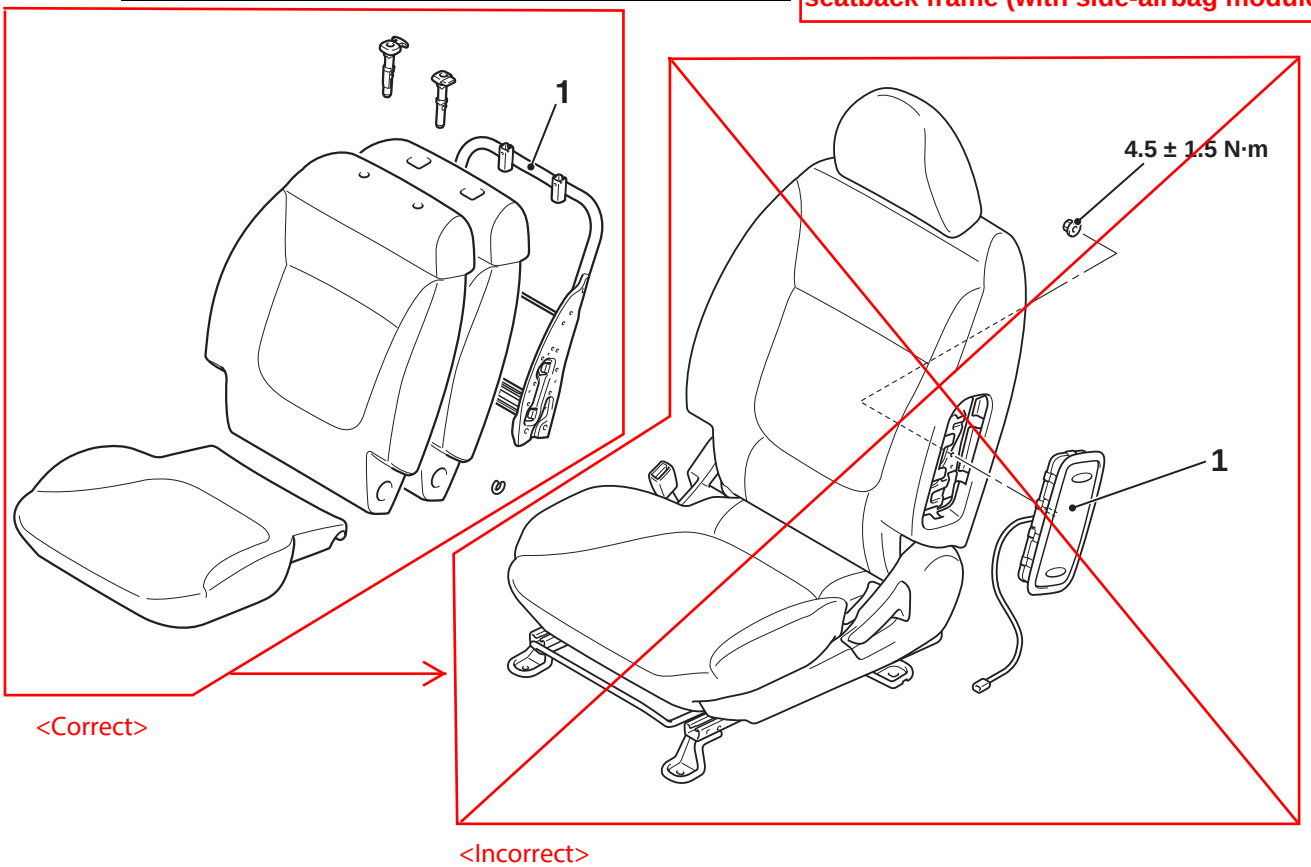

<Correct>

<Incorrect>

AC800583AB

<Correct>

Removal step
- Front seat assembly (Refer to GROUP 52A, Front Seat Assembly)

<Incorrect>

<<A>> 1. Side-airbag module assembly

<Deleted>

Installation step

>>A<< • Pre-installation inspection

<Incorrect>

1. Side-airbag module assembly
- Front seat assembly (Refer to GROUP 52A, Front Seat Assembly)

<Deleted>

>>B<< • Post-installation inspection

REMOVAL SERVICE POINT

<<A>> SIDE-AIRBAG MODULE ASSEMBLY REMOVAL

⚠ CAUTION
- **Never use an electric tester to diagnose the side-airbag module circuit. Never attempt to disassemble the side-airbag module.**
- **Store the removed side-airbag in a clean and dry place.**
- **When discarding the side-airbag module, discard after deploying the side-airbag as specified in the service procedure (Refer to P.52B-252).**

1. Turn up the lower side of the seat back cover.
2. Remove the seat cushion side side-airbag module harness clamp.
3. Remove the seat back cover fastener.
4. Remove the seat back side side-airbag module harness clamp.
5. Remove the side-airbag module harness.

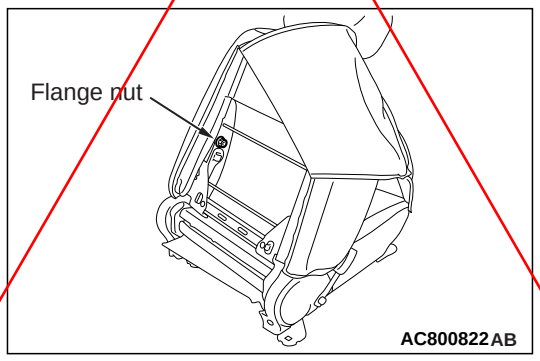

6. Remove the side-airbag module mounting nut.

INSTALLATION SERVICE POINTS

>>A<< PRE-INSTALLATION INSPECTION

1. Before the installation, check the side-airbag module (Refer to P.52B-241).

   NOTE: Even when installing a new side-airbag module assembly, perform an inspection before the installation.
2. Connect the negative (–) battery terminal.

⚠ CAUTION

Be sure to turn the ignition key to the LOCK (OFF) position when connecting or disconnecting M.U.T.-III.

3. Connect M.U.T.-III to the diagnosis connector (16 pin).
4. Turn the ignition switch to the ON position.
5. Read the diagnosis code, and check that everything is normal except the air bag module open circuit.
6. Turn the ignition switch to the LOCK (OFF) position.

>>B<< POST-INSTALLATION INSPECTION

1. Connect the negative battery cable.
2. Turn the ignition switch to the "ON" position.

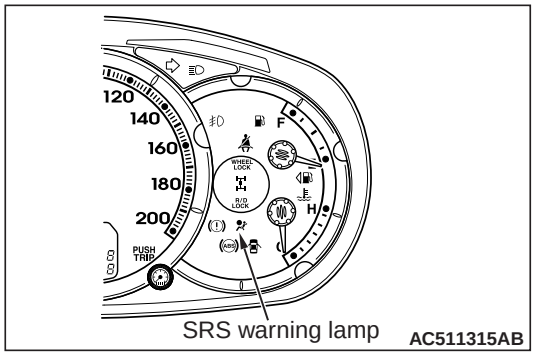

3. Does the "SRS" warning lamp illuminate for approximately seven seconds, and go out?
4. If yes, the SRS system is functioning properly. If no, refer to P.52B-12.

INSPECTION

M1524036600134

SIDE-AIRBAG MODULE(S) <VEHICLES WITH SIDE-AIRBAG AND CURTAIN AIR BAG>

REMOVAL AND INSTALLATION

M1524036500524

<Correct>
Store the front seatback frame (with side-airbag module) on a flat surface. Also, do not put anything on it.

⚠ WARNING

- ***Disconnect the negative battery terminal and wait for 60 seconds or more before starting work. Furthermore, the disconnected battery terminal should be covered with tape to insulate it.***
- ***Never attempt to disassemble or repair the side-airbag modules. If faulty, replace it.***
- ***Do not drop the side-airbag modules or allow contact with water, grease or oil. Replace it if a dent, crack, deformation or rust is detected.***

<Incorrect>
- ~~***The removed side-airbag module should be stored in a clean, dry place with the deployment surface facing up. Do not place anything on top of it.***~~

- ***Do not expose the side-airbag modules to temperatures over 93 °C.***

<Incorrect>
- ~~***After deployment of an side-airbag, the side-airbag module has been replaced with a new one.***~~

- ***Wear gloves and safety glasses when handling side-airbag that have already deployed.***
- ***An undeployed side-airbag module should only be disposed of in accordance with the procedures (Refer to P.52B-289).***

<Added>
•When replacing the side-airbag module, replace the front seatback frame.

<Correct>
After the side-airbag deployment, replace the front seatback frame (with side-airbag module) with the new one.

Pre-removal Operation
- Turn the ignition switch to the LOCK (OFF) position.
- Disconnect the negative (–) battery terminal.

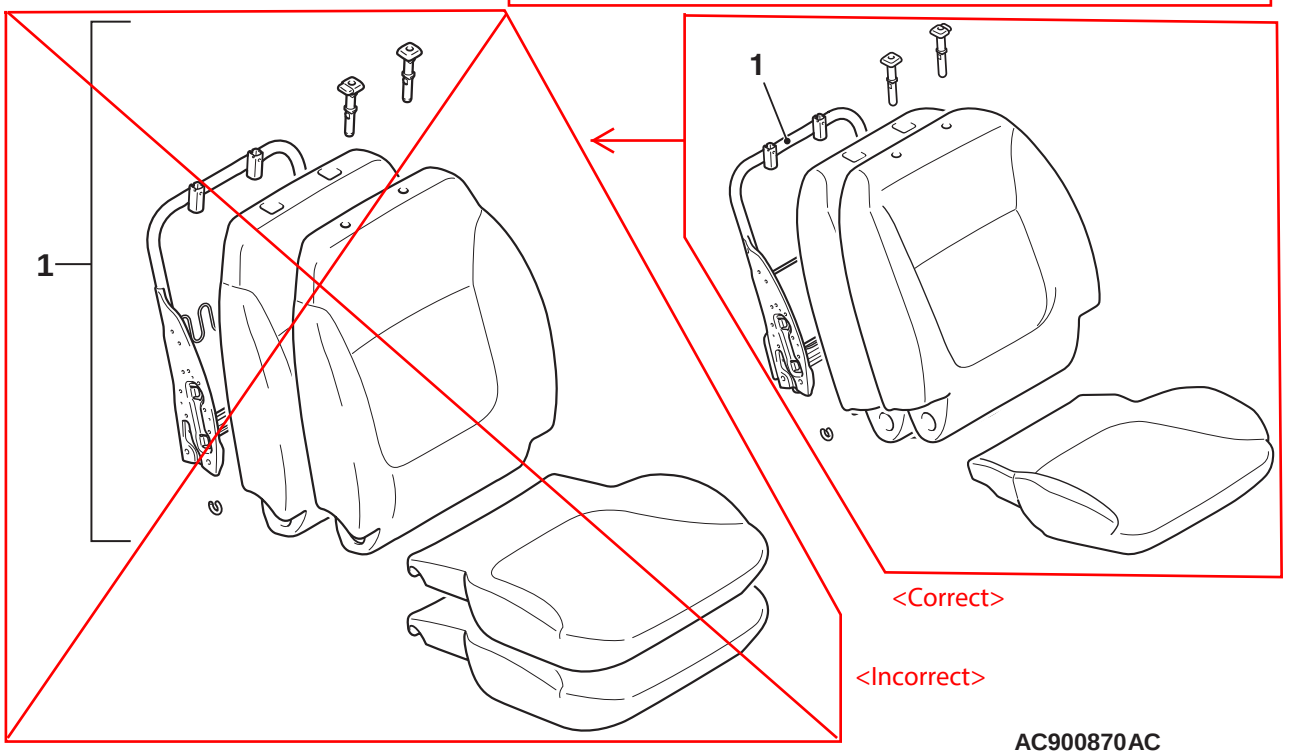

<Incorrect>
<Correct>
AC900870AC

Removal step

<<A>>
<Deleted>

1. ~~Front seatback assembly (Refer to GROUP 52A, Front Seat Assembly)~~

<Incorrect>

Installation step

>>A<<
- Pre-installation inspection <Correct>
- Front seatback assembly (Refer to (GROUP 52A, Front Seat Assembly)

1. Front seatback frame (with side-airbag module) (Refer to GROUP 52A, Front Seat Assembly)

Attached sheet 4 (2/2)

Installation step (Continued)

1. Front seatback assembly (Refer to GROUP 52A, Front Seat Assembly)

<Deleted>

>>B<<

- Post-installation inspection

<Incorrect>

REMOVAL SERVICE POINT

<<A>> SIDE-AIRBAG MODULE ASSEMBLY REMOVAL

⚠ CAUTION

- **Never use an electric tester to diagnose the side-airbag module circuit. Never attempt to disassemble the side-airbag module.**
- **Store the removed side-airbag in a clean and dry place.**
- **When discarding the side-airbag module, discard after deploying the side-airbag as specified in the service procedure (Refer to P.52B-289).**

INSTALLATION SERVICE POINTS

>>A<< PRE-INSTALLATION INSPECTION

1. Before the installation, check the side-airbag module (Refer to P.52B-279).

   NOTE: Even when installing a new side-airbag module assembly, perform an inspection before the installation.

2. Connect the negative (–) battery terminal.

1. Front seatback frame (with side-airbag module) (Refer to GROUP 52A, Front Seat Assembly)
- Front seatback assembly (Refer to GROUP 52A, Front Seat Assembly)

<Correct>

⚠ CAUTION

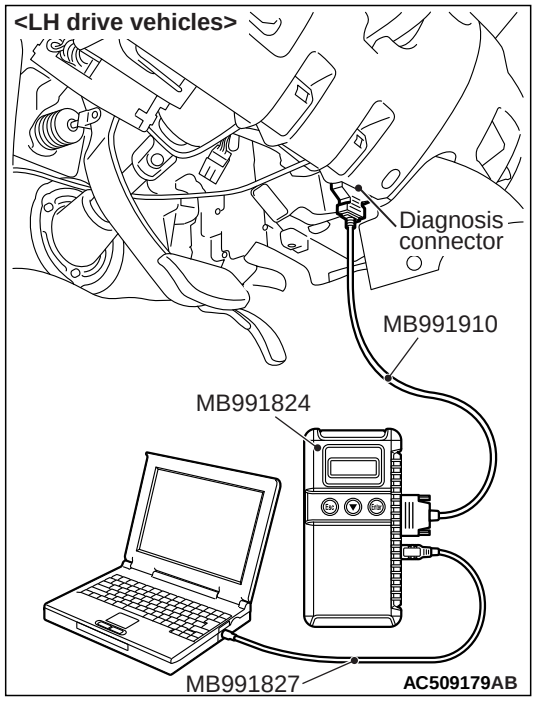

Be sure to turn the ignition key to the LOCK (OFF) position when connecting or disconnecting M.U.T.-III.

3. Connect M.U.T.-III to the diagnosis connector (16 pin).
4. Turn the ignition switch to the ON position.
5. Read the diagnosis code, and check that everything is normal except the air bag module open circuit.
6. Turn the ignition switch to the LOCK (OFF) position.

>>B<< POST-INSTALLATION INSPECTION

1. Connect the negative battery cable.
2. Turn the ignition switch to the "ON" position.

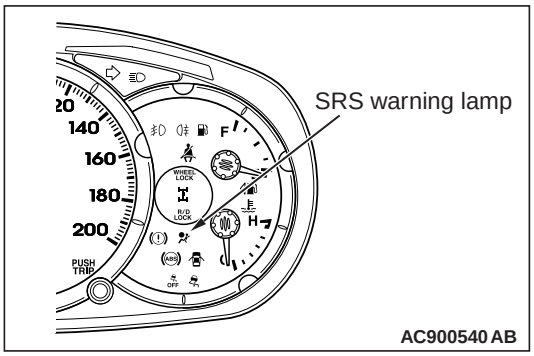

3. Does the "SRS" warning lamp illuminate for approximately seven seconds, and go out?
4. If no, refer to troubleshooting (Refer to P.52B-12).

Attached sheet 5 (1/2)

SIDE-AIRBAG MODULE(S) <VEHICLES WITH SIDE-AIRBAG AND CURTAIN AIR BAG>

<Correct>

REMOVAL AND INSTALLATION

M1524036500546

Store the front seatback frame (with side-airbag module) on a flat surface. Also, do not put anything on it.

⚠ WARNING

- ***Disconnect the negative battery terminal and wait for 60 seconds or more before starting work. Furthermore, the disconnected battery terminal should be covered with tape to insulate it.***
- ***Never attempt to disassemble or repair the side-airbag modules. If faulty, replace it.***
- ***Do not drop the side-airbag modules or allow contact with water, grease or oil. Replace it if a dent, crack, deformation or rust is detected.***

<Incorrect>

- ~~***The removed side-airbag module should be stored in a clean, dry place with the deployment surface facing up. Do not place anything on top of it.***~~
- ***Do not expose the side-airbag modules to temperatures over 93 ℃.***

<Incorrect>

- ~~***After deployment of an side-airbag, the side-airbag module has been replaced with a new one.***~~
- ***Wear gloves and safety glasses when handling side-airbag that have already deployed.***
- ***An undeployed side-airbag module should only be disposed of in accordance with the procedures (Refer to P.52B-254).***

<Added>

•When replacing the side-airbag module, replace the front seatback frame.

After the side-airbag deployment, replace the front seatback frame (with side-airbag module) with the new one.

Pre-removal Operation
- Turn the ignition switch to the LOCK (OFF) position.
- Disconnect the negative (–) battery terminal.

<Correct>

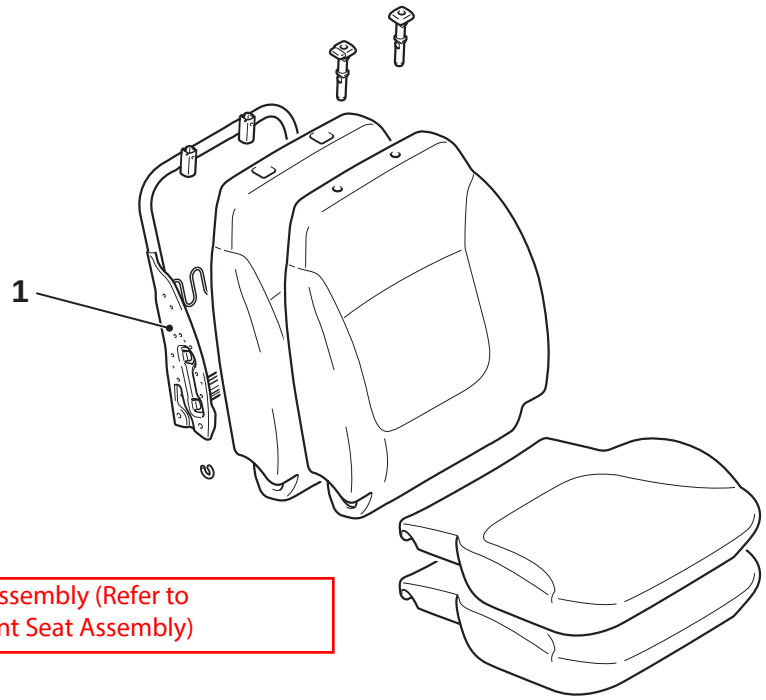

AC900870AB

- Front seatback assembly (Refer to GROUP 52A, Front Seat Assembly)

<Added>

Removal step

1. Front seatback frame (Refer to GROUP 52A, Front Seat Assembly)

~~<<A>>~~

<Deleted>

Installation step

>>A<< • Pre-installation inspection

Installation step (Continued)

1. Front seatback frame (Refer to GROUP 52A, Front Seat Assembly)

<Deleted> >>B<<

- Post-installation inspection

REMOVAL SERVICE POINT

<<A>> FRONT SEATBACK FRAME REMOVAL

⚠ CAUTION

- **Never use an electric tester to diagnose the side-airbag module circuit. Never attempt to disassemble the side-airbag module.**
- **Store the removed side-airbag in a clean and dry place.**
- **When discarding the side-airbag module, discard after deploying the side-airbag as specified in the service procedure (Refer to P.52B-254).**

INSTALLATION SERVICE POINTS

>>A<< PRE-INSTALLATION INSPECTION

1. Before the installation, check the side-airbag module (Refer to P.52B-244).

   NOTE: Even when installing a new side-airbag module assembly, perform an inspection before the installation.
2. Connect the negative (–) battery terminal.

<Added>

- Front seatback assembly (Refer to GROUP 52A, Front Seat Assembly)

⚠ CAUTION

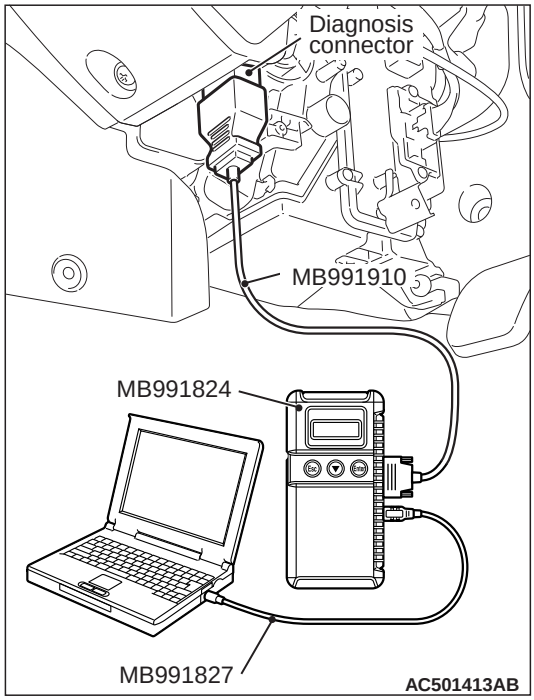

Be sure to turn the ignition key to the LOCK (OFF) position when connecting or disconnecting M.U.T.-III.

3. Connect M.U.T.-III to the diagnosis connector (16 pin).
4. Turn the ignition switch to the ON position.
5. Read the diagnosis code, and check that everything is normal except the air bag module open circuit.
6. Turn the ignition switch to the LOCK (OFF) position.

>>B<< POST-INSTALLATION INSPECTION

1. Connect the negative battery cable.
2. Turn the ignition switch to the "ON" position.

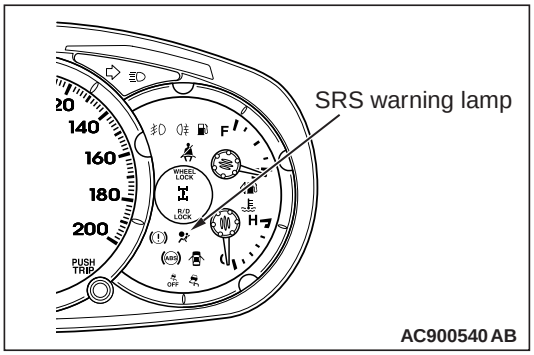

3. Does the "SRS" warning lamp illuminate for approximately seven seconds, and go out?
4. If yes, the SRS system is functioning properly. If no, refer to P.52B-12.

SIDE-AIRBAG MODULE(S) <VEHICLES WITH SIDE-AIRBAG AND CURTAIN AIR BAG>

REMOVAL AND INSTALLATION

M1524036500643

<Correct>
Store the front seatback frame (with side-airbag module) on a flat surface. Also, do not put anything on it.

⚠ WARNING

- ***Disconnect the negative battery terminal and wait for 60 seconds or more before starting work. Furthermore, the disconnected battery terminal should be covered with tape to insulate it.***
- ***Never attempt to disassemble or repair the side-airbag modules. If faulty, replace it.***
- ***Do not drop the side-airbag modules or allow contact with water, grease or oil. Replace it if a dent, crack, deformation or rust is detected.***

<Incorrect>

- ~~***The removed side-airbag module should be stored in a clean, dry place with the deployment surface facing up. Do not place anything on top of it.***~~
- ***Do not expose the side-airbag modules to temperatures over 93 °C.***

<Incorrect>

- ~~***After deployment of an side-airbag, the front seatback assembly has been replaced with a new one.***~~
- ***Wear gloves and safety glasses when handling side-airbag that have already deployed.***
- ***An undeployed side-airbag module should only be disposed of in accordance with the procedures (Refer to P.52B-246).***

<Added>
•When replacing the side-airbag module, replace the front seatback frame.

Pre-removal Operation
- Turn the ignition switch to the LOCK (OFF) position.
- Disconnect the negative (–) battery terminal.

After the side-airbag deployment, replace the front seatback frame (with side-airbag module) with the new one.

<Correct>

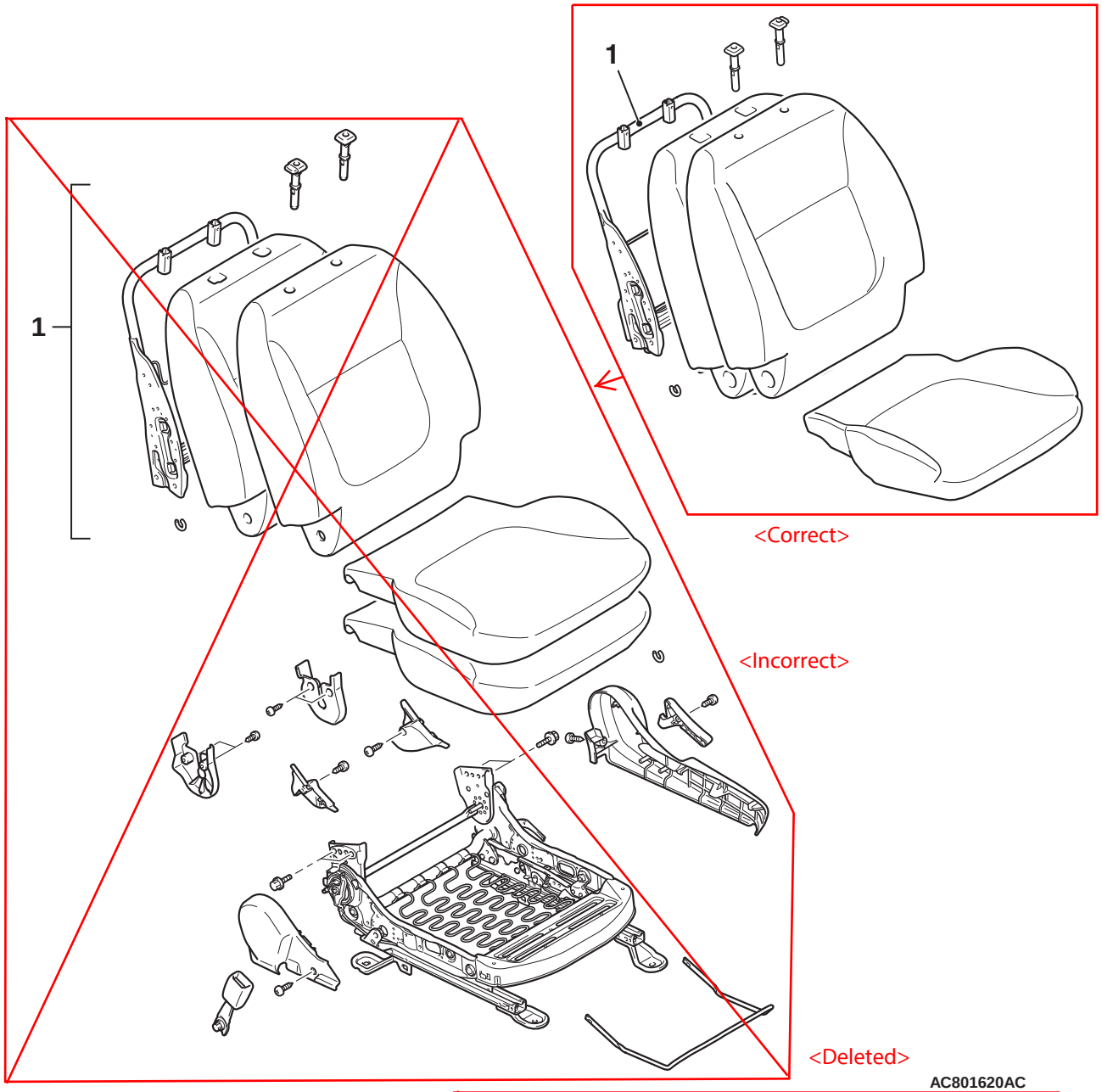

<Deleted>

<<A>>

Removal step <Incorrect>

1. Front seatback assembly (Refer to GROUP 52A, Front Seat Assembly)

Installation step <Incorrect>

>>A<< • Pre-installation inspection

1. Front seatback assembly (Refer to GROUP 52A, Front Seat Assembly)

>>B<< • Post-installation inspection

REMOVAL SERVICE POINT

<<A>> FRONT SEATBACK ASSEMBLY REMOVAL

⚠ CAUTION

- **Never use an electric tester to diagnose the side-airbag module circuit. Never attempt to disassemble the side-airbag module.**
- **Store the removed side-airbag in a clean and dry place.**
- **When discarding the side-airbag module, discard after deploying the side-airbag as specified in the service procedure (Refer to P.52B-246).**

<Correct>

- Front seatback assembly (Refer to GROUP 52A, Front Seat Assembly)

1. Front seatback frame (with side-airbag module) (Refer to GROUP 52A, Front Seat Assembly)

<Correct>

1. Front seatback frame (with side-airbag module) (Refer to GROUP 52A, Front Seat Assembly)

- Front seatback assembly (Refer to GROUP 52A, Front Seat Assembly)