SERVICE BULLETIN

MITSUBISHI MOTORS

GLOBAL AFTER SALES OFFICE, MITSUBISHI MOTORS CORPORATION

PURPOSE : CORRECTION	ISSUE NO. : MSB-15EXL52_54_90-501	DATE : 2015-09-10
SUBJECT : Error in writing and omission about the inspection procedure and the wiring diagram of the front seat belt switch		<DESTINATION/MODEL> (As per attached sheet 1) <M/Y> 09-15
GROUP : Gr:52(Interior & SRS Airbag)/Gr:54(Chassis electrical)/Gr:90(Circuit diagram)		OUTLANDER SPORT/ASX/LANCER/LANCER SPORTBACK/4008/C4 AIRCROSS

1. Description :

Please refer to the attached document for the correction of the error in writing existing in the applicable service manual.

2. Affected service manuals :

Please refer to the attached document (Attached sheet 1)

3. About the details :

Please refer to the attached document (Attached sheets 2-11)

<ASX / OUTLANDER SPORT>

EU/RUSSIA/ SOUH AFRICA

Attached sheet 1(1/4)

Applicable manual	Pub. No.	Applicable title (INFO ID)	Contents
2011 ASX Workshop Manual	CGWE11E2-CD (English) CGWF11E2-CD (French) CGWG11E2-CD (German) CGWS11E2-CD (Spanish) CGWI11E2-CD (Italian) N/A (RUSSIA) DRAFT (SOUTH AFRICA)	SEAT BELT INSPECTION (M523-00-440-49500-01)	Attached sheet 2
		Inspection Procedure 11: Seat belt reminder function does not work normally. (M540-20-790-14000-01)	Attached sheet 3
		CHECK AT ECU TERMINALS (M540-20-120-58500-01)	Attached sheet 4
		SEAT BELT WARNING (M901-02-850-66700-01)	Attached sheet 7
2012 ASX Workshop Manual	CGWE12E1-CD (English) CGWF12E1-CD (French) CGWG12E1-CD (German) CGWS12E1-CD (Spanish) CGWI12E1-CD (Italian) N/A (RUSSIA) DRAFT (SOUTH AFRICA)	SEAT BELT INSPECTION (M523-00-440-49500-01)	Attached sheet 2
		Inspection Procedure 11: Seat belt reminder function does not work normally. (M540-20-790-14000-01)	Attached sheet 3
		CHECK AT ECU TERMINALS (M540-20-120-58500-01)	Attached sheet 4
		SEAT BELT WARNING (M901-02-850-66700-01)	Attached sheet 7
2013 ASX Workshop Manual	CGAE13E2-CD (English) CGAF13E2-CD (French) CGAG13E2-CD (German) CGAS13E2-CD (Spanish) CGAI13E2-CD (Italian) N/A (RUSSIA) DRAFT (SOUTH AFRICA)	SEAT BELT INSPECTION (M523-00-440-49500-01)	Attached sheet 2
		Inspection Procedure 11: Seat belt reminder function does not work normally. (M540-20-790-14000-01)	Attached sheet 3
		CHECK AT ECU TERMINALS (M540-20-120-58500-01)	Attached sheet 4
		SEAT BELT WARNING (M901-02-851-25100-01)	Attached sheet 7
2014 ASX Workshop Manual	CGAE14E1-CD (English) CGAF14E1-CD (French) CGAG14E1-CD (German) CGAS14E1-CD (Spanish) CGAI14E1-CD (Italian) N/A (RUSSIA) DRAFT (SOUTH AFRICA)	SEAT BELT INSPECTION (M523-00-440-49500-01)	Attached sheet 2
		Inspection Procedure 11: Seat belt reminder function does not work normally. (M540-20-790-14000-01)	Attached sheet 3
		CHECK AT ECU TERMINALS (M540-20-120-58500-01)	Attached sheet 4
		SEAT BELT WARNING (M901-02-851-30300-01)	Attached sheet 7
2015 ASX Workshop Manual	CGAE15E1-CD (English) CGAF15E1-CD (French) CGAG15E1-CD (German) CGAS15E1-CD (Spanish) CGAI15E1-CD (Italian) N/A (RUSSIA) DRAFT (SOUTH AFRICA)	SEAT BELT INSPECTION (M523-00-440-49500-01)	Attached sheet 2
		Inspection Procedure 11: Seat belt reminder function does not work normally. (M540-20-790-14000-01)	Attached sheet 3
		CHECK AT ECU TERMINALS (M540-20-120-58500-01)	Attached sheet 4
		SEAT BELT WARNING (M901-02-851-30300-01)	Attached sheet 7
2015.5 ASX Workshop Manual	CGAE15E2-CD (English) CGAF15E2-CD (French) CGAG15E2-CD (German) CGAS15E2-CD (Spanish) CGAI15E2-CD (Italian) DRAFT (SOUTH AFRICA)	SEAT BELT INSPECTION (M523-00-440-49500-01)	Attached sheet 2
		Inspection Procedure 11: Seat belt reminder function does not work normally. (M540-20-790-14000-01)	Attached sheet 3
		CHECK AT ECU TERMINALS (M540-20-120-58500-01)	Attached sheet 4
		SEAT BELT WARNING (M901-02-851-46600-01)	Attached sheet 8

Attached sheet 1 (2/4)

GENERAL EXPORT/AUSTRALIA/NEW ZEALAND

Applicable manual	Pub. No.	Applicable title (INFO ID)	Contents
2011 ASX/OUTLANDER SPORT Workshop Manual	PWPE1006R (English) PWPS1007R (Spanish) DRAFT (MMAL/NZ)	SEAT BELT INSPECTION (M523-00-440-49500-01)	Attached sheet 2
		Inspection Procedure 11: Seat belt reminder function does not work normally. (M540-20-790-15100-01)	Attached sheet 5
		CHECK AT ECU TERMINALS (M540-20-120-58500-01)	Attached sheet 4
		SEAT BELT WARNING (M901-02-850-65600-01)	Attached sheet 9
2012 ASX/OUTLANDER SPORT Workshop Manual	PWPE1007R (English) PWPS1008R (Spanish) DRAFT (MMAL/NZ)	SEAT BELT INSPECTION (M523-00-440-49500-01)	Attached sheet 2
		Inspection Procedure 11: Seat belt reminder function does not work normally. (M540-20-790-15100-01)	Attached sheet 5
		CHECK AT ECU TERMINALS (M540-20-120-58500-01)	Attached sheet 4
		SEAT BELT WARNING (M901-02-850-65600-01)	Attached sheet 9
2013 ASX/OUTLANDER SPORT Workshop Manual	PWPE1204R (English) PWPS1205R (Spanish) AU900409 (MMAL) DRAFT (NZ)	SEAT BELT INSPECTION (M523-00-440-49500-01)	Attached sheet 2
		Inspection Procedure 11: Seat belt reminder function does not work normally. (M540-20-790-15100-01)	Attached sheet 5
		CHECK AT ECU TERMINALS (M540-20-120-58500-01)	Attached sheet 4
		SEAT BELT WARNING (M901-02-850-65600-01)	Attached sheet 9
	AU900409 (MMAL) DRAFT (NZ)	SEAT BELT WARNING <4N14> (M901-02-851-26200-01)	Attached sheet 10
2014 ASX/OUTLANDER SPORT Workshop Manual	PWPE1312R (English) PWPS1313R (Spanish) AU900410 (MMAL) DRAFT (NZ)	SEAT BELT INSPECTION (M523-00-440-49500-01)	Attached sheet 2
		Inspection Procedure 11: Seat belt reminder function does not work normally. (M540-20-790-15100-01)	Attached sheet 5
		CHECK AT ECU TERMINALS (M540-20-120-58500-01)	Attached sheet 4
		SEAT BELT WARNING (M901-02-851-29500-01)	Attached sheet 9
2015 ASX/OUTLANDER SPORT Workshop Manual	PWPE1412R (English) PWPS1413R (Spanish) AU900418 (MMAL) DRAFT (NZ)	SEAT BELT INSPECTION (M523-00-440-49500-01)	Attached sheet 2
		Inspection Procedure 11: Seat belt reminder function does not work normally. (M540-20-790-15100-01)	Attached sheet 5
		CHECK AT ECU TERMINALS (M540-20-120-58500-01)	Attached sheet 4
		SEAT BELT WARNING (M901-02-851-29500-01)	Attached sheet 9

PEUGEOT/CITROEN

Applicable manual	Pub. No.	Applicable title (INFO ID)	Contents
2012 4008/C4 AIRCROSS Workshop Manual Except DV6	N/A	SEAT BELT INSPECTION (M523-00-440-49500-01)	Attached sheet 2
		Inspection Procedure 11: Seat belt reminder function does not work normally. (M540-20-790-14000-01)	Attached sheet 3
		CHECK AT ECU TERMINALS (M540-20-120-58500-01)	Attached sheet 4
		SEAT BELT WARNING (M901-02-850-95700-01)	Attached sheet 11
2012 4008/C4 AIRCROSS Workshop Manual DV6	N/A	SEAT BELT INSPECTION (M523-00-440-49500-01)	Attached sheet 2
		Inspection Procedure 11: Seat belt reminder function does not work normally. (M540-20-790-14000-01)	Attached sheet 3
		CHECK AT ECU TERMINALS (M540-20-120-58500-01)	Attached sheet 4
		SEAT BELT WARNING (M901-02-851-05700-01)	Attached sheet 11

<LANCER / LANCER SPORT BACK>

EU/RUSSIA

Applicable manual	Pub. No.	Applicable title (INFO ID)	Content
2009 LANCER Workshop Manual	CG1E09E1-CD (English) CG1F09E1-CD (French) CG1G09E1-CD (German) CG1S09E1-CD (Spanish) CG1I09E1-CD (Italian) RUSSIA:N/A	SEAT BELT INSPECTION (M523-00-440-47300-01)	Attached sheet 6
2009 LANCER SPORTBACK Workshop Manual	CG4E09E1-CD (English) CG4F09E1-CD (French) CG4G09E1-CD (German) CG4S09E1-CD (Spanish) CG4I09E1-CD (Italian) RUSSIA:N/A	SEAT BELT INSPECTION (M523-00-440-62200-01)	
2010 LANCER Workshop Manual	CG1E10E1-CD (English) CG1F10E1-CD (French) CG1G10E1-CD (German) CG1S10E1-CD (Spanish) CG1I10E1-CD (Italian) RUSSIA:N/A	SEAT BELT INSPECTION (M523-00-440-47300-01)	
2010 LANCER SPORTBACK Workshop Manual	CG4E10E1-CD (English) CG4F10E1-CD (French) CG4G10E1-CD (German) CG4S10E1-CD (Spanish) CG4I10E1-CD (Italian) RUSSIA:N/A	SEAT BELT INSPECTION (M523-00-440-62200-01)	
2011 LANCER / LANCER SPORTBACK Workshop Manual	CG1E11E1-CD (English) CG1F11E1-CD (French) CG1G11E1-CD (German) CG1S11E1-CD (Spanish) CG1I11E1-CD (Italian) RUSSIA:N/A	SEAT BELT INSPECTION (M523-00-440-62200-01)	
2012 LANCER / LANCER SPORTBACK Workshop Manual	CG1E12E1-CD (English) CG1F12E1-CD (French) CG1G12E1-CD (German) CG1S12E1-CD (Spanish) CG1I12E1-CD (Italian) RUSSIA:N/A		

EU/RUSSIA

Applicable manual	Pub. No.	Applicable title (INFO ID)	Content
2013 LANCER / LANCER SPORTBACK Workshop Manual	CG1E13E1-CD (English) CG1F13E1-CD (French) CG1G13E1-CD (German) CG1S13E1-CD (Spanish) CG1I13E1-CD (Italian) RUSSIA:N/A	SEAT BELT INSPECTION (M523-00-440-62200-01)	Attached sheet 6
2014 LANCER / LANCER SPORTBACK Workshop Manual	CG1E14E1-CD (English) CG1F14E1-CD (French) CG1G14E1-CD (German) CG1S14E1-CD (Spanish) CG1I14E1-CD (Italian) RUSSIA:N/A		
2015 LANCER / LANCER SPORTBACK Workshop Manual	CG1E15E1-CD (English) CG1F15E1-CD (French) CG1G15E1-CD (German) CG1S15E1-CD (Spanish) CG1I15E1-CD (Italian) RUSSIA:N/A		

GENERAL EXPORT /GCC

Applicable manual	Pub. No.	Applicable title (INFO ID)	Content
2009 LANCER/ LANCER EX Workshop Manual	PWME0802R-CD (English) PWMS0803R-CD (Spanish)	SEAT BELT INSPECTION (M523-00-440-47300-01)	Attached sheet 6
2010 LANCER/ LANCER EX Workshop Manual	PWME0901R-CD (English) PWMS0901R-CD (Spanish)		
2011 LANCER/ LANCER EX Workshop Manual	PWME1010R-CD (English) PWMS1010R-CD (Spanish)		
2012 LANCER/ LANCER EX Workshop Manual	PWME1111R-CD (English) PWMS1111R-CD (Spanish)		
2013 LANCER/ LANCER EX Workshop Manual	PWME1202R-CD (English) PWMS1202R-CD (Spanish)		
2015 LANCER/ LANCER EX Workshop Manual	PWME1403R-CD (English) PWMS1403R-CD (Spanish)		

AUSTRALIA/NEW ZEALAND

Applicable manual	Pub. No.	Applicable title (INFO ID)	Content
2009 LANCER Workshop Manual	MR936503 (MMAL) DRAFT (NZ)	SEAT BELT INSPECTION (M523-00-440-63300-01)	Attached sheet 6
2010 LANCER Workshop Manual	MR936920 (MMAL) DRAFT (NZ)		
2009 LANCER SPORTBACK Workshop Manual	MR936570(MMAL) DRAFT (NZ)	SEAT BELT INSPECTION (M523-00-440-62200-01)	
2010 LANCER SPORTBACK Workshop Manual	MR936922(MMAL) DRAFT (NZ)		

INSPECTION

M1523004400495

INSPECTION OF SEAT BELT SWITCH FOR CONTINUITY

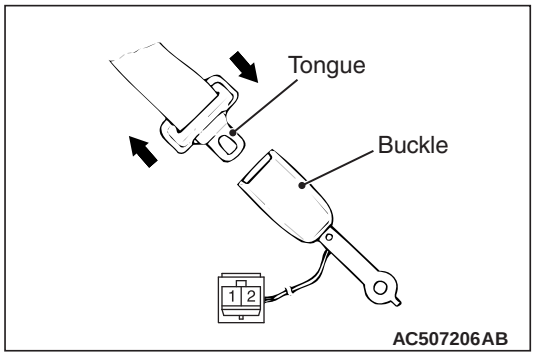

If there is no continuity, replace the inner seat belt.

(DRIVER'S SIDE) <Added>

Item	Terminal number	Normal conditions
Fastened seat belt	1 – 2	No continuity
Unfastened seat belt		Continuity exists

<Added>

(PASSENGER'S SIDE)

Item		Terminal number	Normal conditions
Not seated	Fastened seat belt	1 – 2	No continuity
	Unfastened seat belt		
Seated	Fastened seat belt		
	Unfastened seat belt		Continuity exists (100 Ω or less)

NOTE:

- *When the continuity exist with the seat belt fastened, replace the inner seat belt.*
- *When the continuity does not exist while the front passenger is seated with the seat belt unfastened, replace the inner seat belt.*
- *When the continuity exists while the front passenger is NOT seated with the seat belt unfastened, check the seat belt reminder switch.*

Inspection Procedure 11: Seat belt reminder function does not work normally.

⚠ CAUTION

Whenever the ECU is replaced, ensure that the input and output signal circuits are normal.

COMMENTS ON TROUBLE SYMPTOM

If the seat belt reminder function does not work normally, the seat belt switch input circuit, the combination meter or centre panel unit <Except vehicles for South Africa> may be defective.

PROBABLE CAUSES

- Malfunction of the seat belt switch (driver's side)
- Malfunction of the seat belt switch (passenger's side) <Except vehicles for South Africa>
- <Added> Malfunction of the front seat belt reminder sensor (passenger's side) <Except vehicles for South Africa>
- Malfunction of the combination meter
- Malfunction of the centre panel unit <Except vehicles for South Africa>
- Damaged harness wires and connectors

DIAGNOSIS PROCEDURE

STEP 1. Connector check: D-33 seat belt switch (driver's side) connector, D-40 seat belt switch (passenger's side) connector <Except vehicles for South Africa>

Q: Is the check result normal?
YES : Go to Step 2.
NO : Repair the defective connector.

<Incorrect>

STEP 2. Check the seat belt switch.
Refer to GROUP 52A – Front Seat Belt

Q: Is the check result normal?
YES : Go to Step 3.
NO : Replace the seat belt switch.

STEP 3. Resistance measurement at the D-33 seat belt switch (driver's side) connector, D-40 seat belt switch (passenger's side) connector <Except vehicles for South Africa>

(1) Disconnect the connector, and measure at the wiring harness side.
(2) Measure the resistance between the seat belt switch connector terminal No. 2 and the body earth.

OK: Continuity exists (2 Ω or less)

Q: Is the check result normal?
YES : Go to Step 5.
NO : Go to Step 4.

STEP 4. Wiring harness check from D-33 seat belt switch (driver's side) connector, D-40 seat belt switch (passenger's side) connector <Except vehicles for South Africa> terminal No. 2 to body earth.

Check the earth wires for open circuit.

Q: Is the check result normal?
YES : The trouble can be an intermittent malfunction (Refer to GROUP 00 – How to use Troubleshooting/inspection Service Points – How to Cope with Intermittent Malfunction).
NO : Repair the wiring harness.

STEP 5. Connector check: C-203 combination meter connector

Q: Is the check result normal?
YES : Go to Step 6.
NO : Repair the defective connector.

<Correct>

STEP 2. Check the seat belt switch and front seat belt reminder sensor (passenger's side).

Check the seat belt switch and front seat belt reminder sensor. Refer to GROUP 52A – Front Seat Belt

Q: Is the check result normal?
YES : Go to Step 3.
NO : Replace the seat belt switch or the front seat pad (with front seat belt reminder sensor).

Attached sheet 4

CHECK AT ECU TERMINALS

Connector: C-203



AC606907AG

Terminal No.	Check item	Check condition	Normal condition
1	ECU power supply (battery)	Always	System voltage
2	ECU power supply (Ignition switch: IG1)	Ignition switch: ON	System voltage
		Ignition switch: OFF	1 V or less
3	Multi information meter switch input	Multi information meter switch: ON	1 V or less
		Multi information meter switch: OFF	System voltage
4	Parking brake switch input	Parking brake switch: ON	1 V or less
		Parking brake switch: OFF	System voltage
5	Seat belt switch (driver's side) input	Seat belt switch (driver's side): ON	1 V or less
		Seat belt switch (driver's side): OFF	System voltage
6 to 12	–	–	–
13	Earth (sensor)	Always	1 V or less
<Incorrect> 15	–	–	–
16	Seat belt switch (passenger's side) input	Seat belt switch (passenger's side): ON	1 V or less
		Seat belt switch (passenger's side): OFF	System voltage
<Correct>			
16	Seat belt switch (passenger's side) input	When a person sits on the front passenger's seat and fastens a seat belt.	1 V or less
		When no person sits on the front passenger's seat.	1 V or less
		When a person sits on the front passenger's seat and does not fasten a seat belt.	System voltage
17	–	–	–
18	Input of fuel gauge	Fuel: FULL	Approximately 2 V
		Fuel: EMPTY	Approximately 8 V
19	–	–	–
20	Vehicle speed signal output	Vehicle speed: Approximately 40 km/h	Approximately 28Hz
		Vehicle speed change	In accordance with the vehicle speed, a pulse is generated.
21	Earth (ECU)	Always	1 V or less
22	Illumination (–) output	Lighting switch: OFF	1 V or less
		Lighting switch: TAIL position	In accordance with the rheostat switch operation, a pulse is generated.

Attached sheet 5

Inspection Procedure 11: Seat belt reminder function does not work normally.

⚠ CAUTION

Whenever the ECU is replaced, ensure that the input and output signal circuits are normal.

COMMENTS ON TROUBLE SYMPTOM

If the seat belt reminder function does not work normally, the seat belt switch input circuit, the combination meter or centre panel unit <vehicles for Australia and New Zealand> may be defective.

PROBABLE CAUSES

- Malfunction of the seat belt switch (driver's side)
- Malfunction of the seat belt switch (passenger's side) <vehicles for Australia and New Zealand> <Added>
- Malfunction of the front seat belt reminder sensor (passenger's side) <vehicles for Australia and New Zealand>
- Malfunction of the combination meter
- Malfunction of the centre panel unit <vehicles for Australia and New Zealand>
- Damaged harness wires and connectors

DIAGNOSIS PROCEDURE

STEP 1. Connector check: D-33 seat belt switch (driver's side) connector, D-40 seat belt switch (passenger's side) connector <vehicles for Australia and New Zealand>

Q: Is the check result normal?
YES : Go to Step 2.
NO : Repair the defective connector.

<Incorrect>

STEP 2. Check the seat belt switch.
Refer to GROUP 52A – Front Seat Belt

Q: Is the check result normal?
YES : Go to Step 3.
NO : Replace the seat belt switch.

STEP 3. Resistance measurement at the D-33 seat belt switch (driver's side) connector, D-40 seat belt switch (passenger's side) connector <vehicles for Australia and New Zealand>

(1) Disconnect the connector, and measure at the wiring harness side.
(2) Measure the resistance between the seat belt switch connector terminal No. 2 and the body earth.

OK: Continuity exists (2 Ω or less)

Q: Is the check result normal?
YES : Go to Step 5.
NO : Go to Step 4.

STEP 4. Wiring harness check from D-33 seat belt switch (driver's side) connector, D-40 seat belt switch (passenger's side) connector <vehicles for Australia and New Zealand> terminal No. 2 to body earth.

Check the earth wires for open circuit.

Q: Is the check result normal?
YES : The trouble can be an intermittent malfunction (Refer to GROUP 00 – How to use Troubleshooting/inspection Service Points – How to Cope with Intermittent Malfunction).
NO : Repair the wiring harness.

STEP 5. Connector check: C-203 combination meter connector

Q: Is the check result normal?
YES : Go to Step 6.
NO : Repair the defective connector.

<Correct>

STEP 2. Check the seat belt switch and front seat belt reminder sensor (passenger's side).

Check the seat belt switch and front seat belt reminder sensor. Refer to GROUP 52A – Front Seat Belt .

Q: Is the check result normal?
YES : Go to Step 3.
NO : Replace the seat belt switch or the front seat pad (with front seat belt reminder sensor).

<Incorrect>

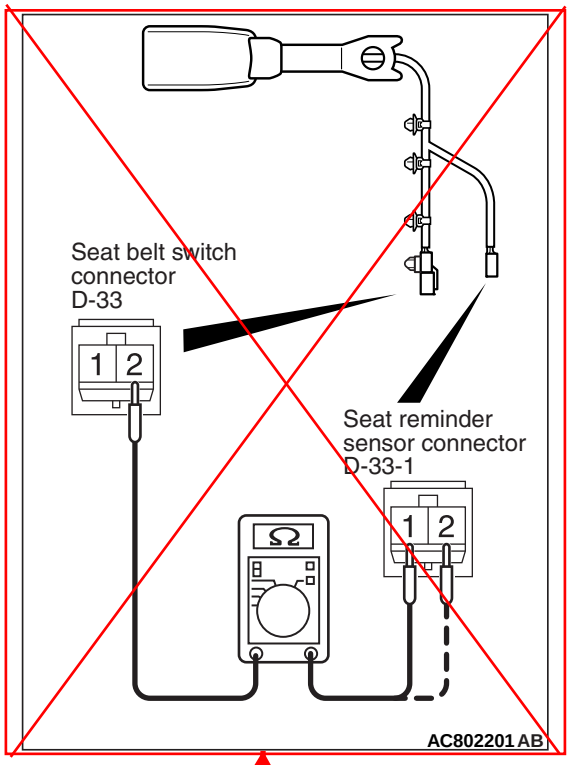

SEAT BELT SWITCH CONTINUITY CHECK (PASSENGER'S SIDE)

Item	Tester connection	Specified condition
Fastened seat belt	Connector D-33-1 (terminal No.2) – D-33 (terminal No.2)	Open circuit
Unfastened seat belt		Continuity exists (Less than 2 Ω)

<Incorrect>

SEAT BELT REMINDER SENSOR CONNECTOR CHECK (PASSENGER'S SIDE)

Item	Tester connection	Specified condition
Fastened seat belt	Connector D-33-1 (terminal No.1) – D-33-1 (terminal No.2)	Open circuit
Unfastened seat belt		Continuity exists (Less than 2 Ω)

<Correct>

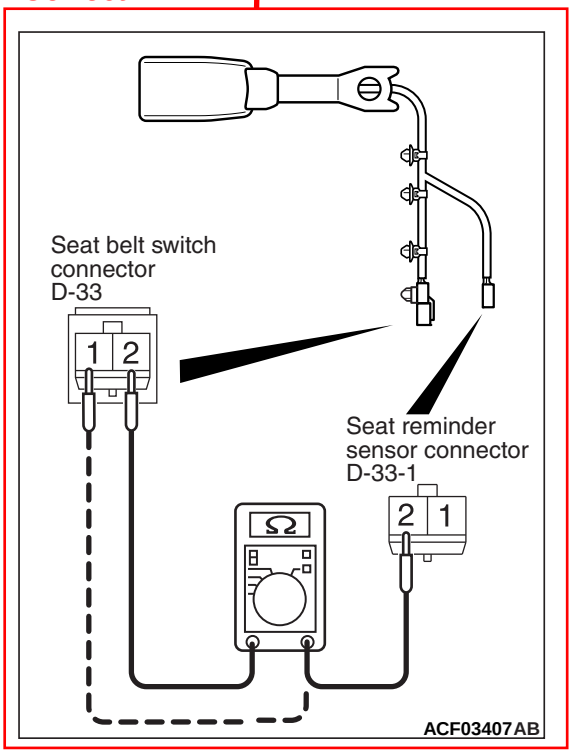

<Correct>

SEAT BELT REMINDER SENSOR CONNECTOR CHECK (PASSENGER'S SIDE)

Item	Tester connection	Specified condition
Fastened seat belt	Connector D-33 (terminal No.1) – D-33 (terminal No.2)	Open circuit
Unfastened seat belt		Continuity exists (Less than 2 Ω)

NOTE:

- *Put a weight on the cushion before inspection.*
- *Connect the seat belt switch connector with the seat belt reminder sensor connector before inspection.*

<Added>

Attached sheet 7

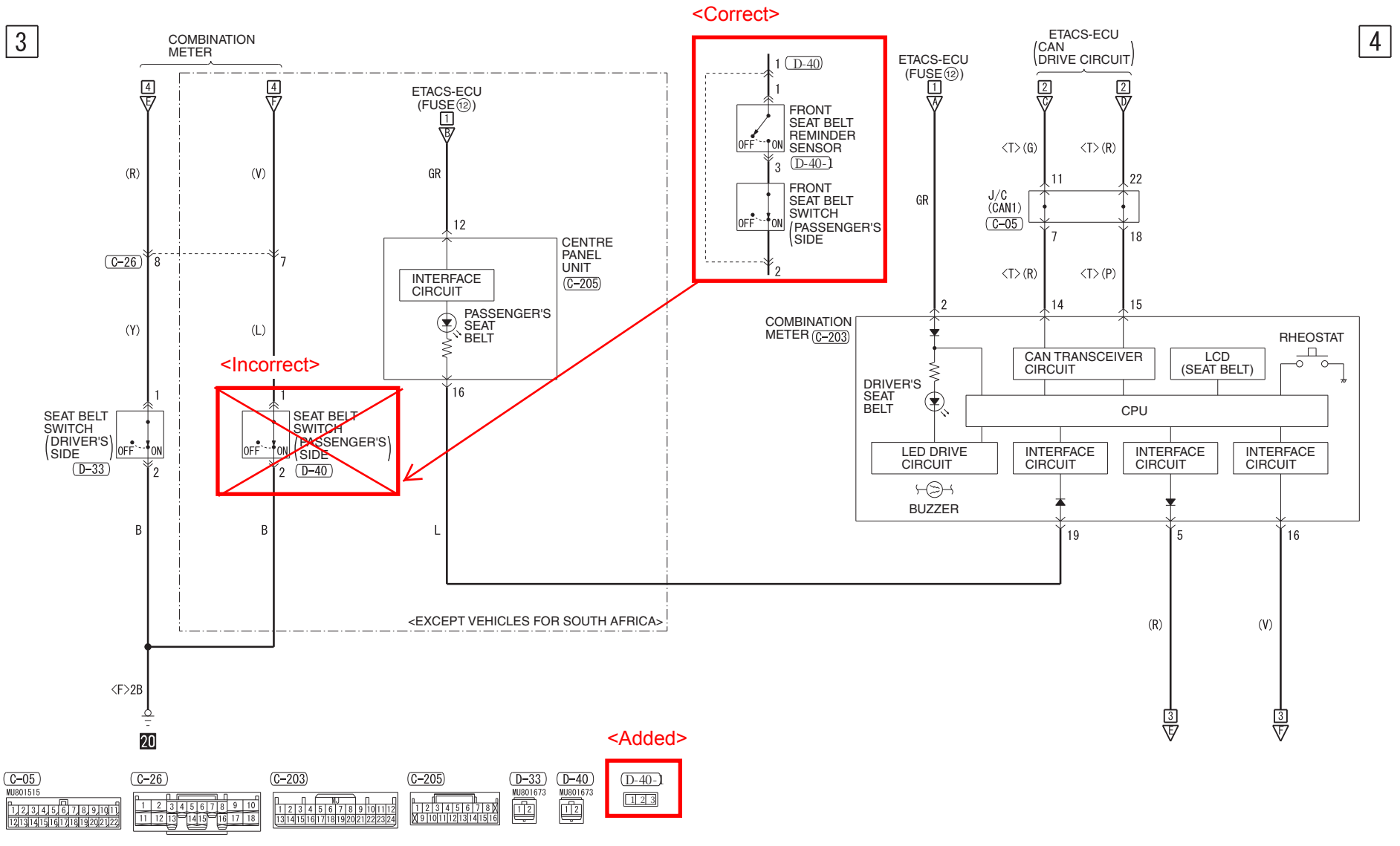

Wire colour code
B : Black LG : Light green G : Green L : Blue W : White Y : Yellow SB : Sky blue
BR : Brown O : Orange GR : Grey R : Red P : Pink V : Violet PU : Purple SI : Silver

Attached sheet 8

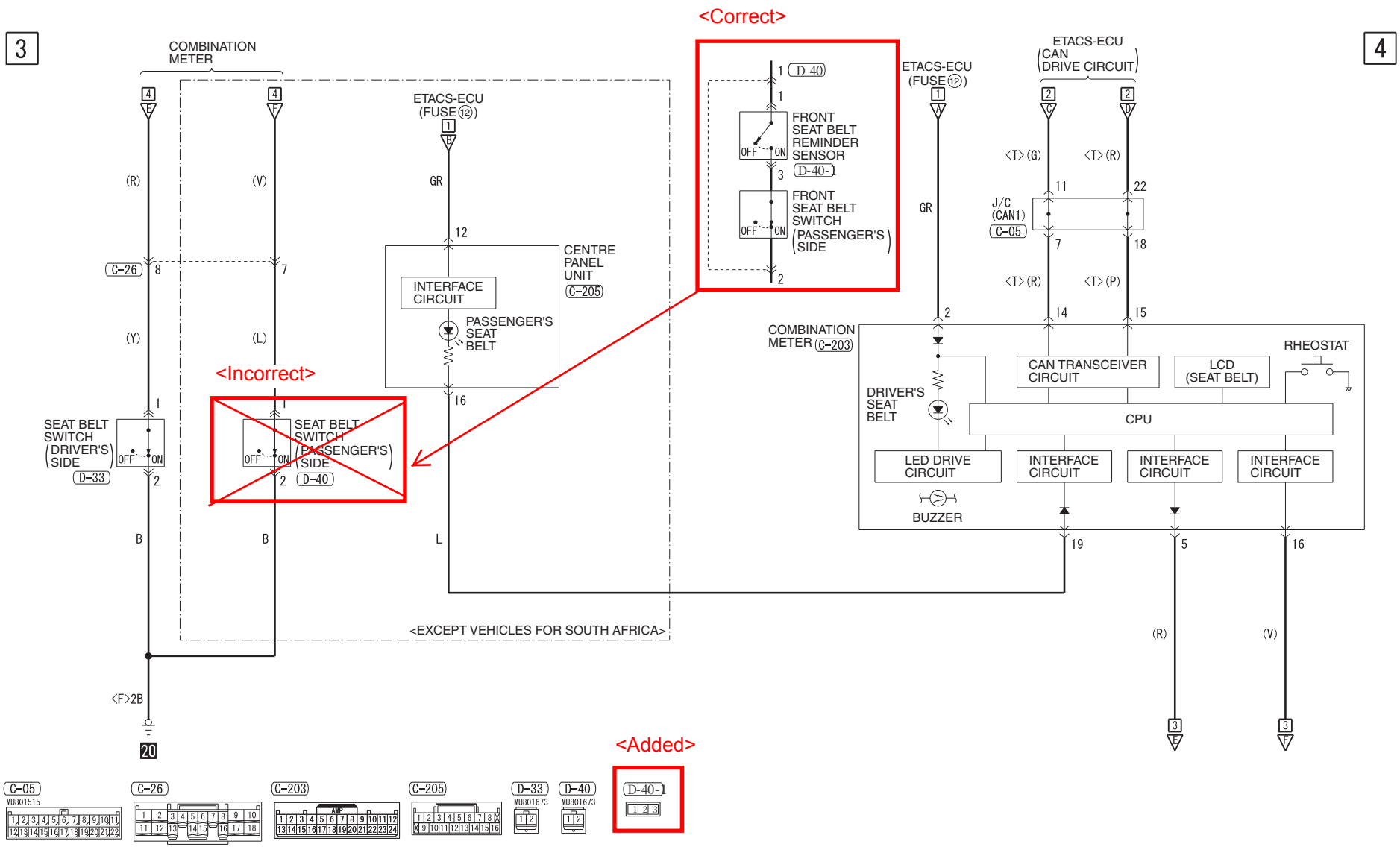

Wire colour code
B : Black LG : Light green G : Green L : Blue W : White Y : Yellow SB : Sky blue
BR : Brown O : Orange GR : Grey R : Red P : Pink V : Violet PU : Purple SI : Silver

Attached sheet 9

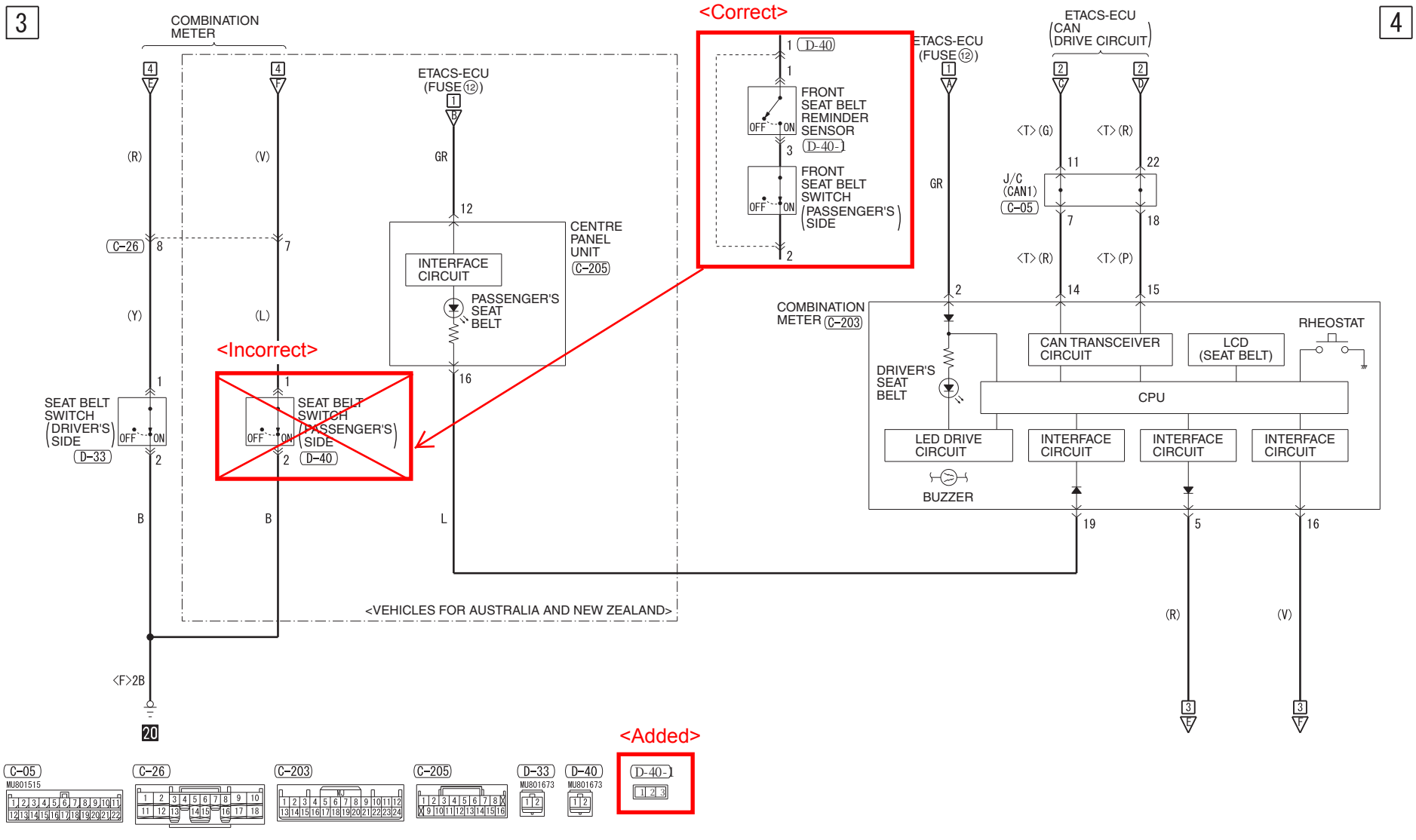

Wire colour code
B : Black LG : Light green G : Green L : Blue W : White Y : Yellow SB : Sky blue
BR : Brown O : Orange GR : Grey R : Red P : Pink V : Violet PU : Purple SI : Silver

Attached sheet 10

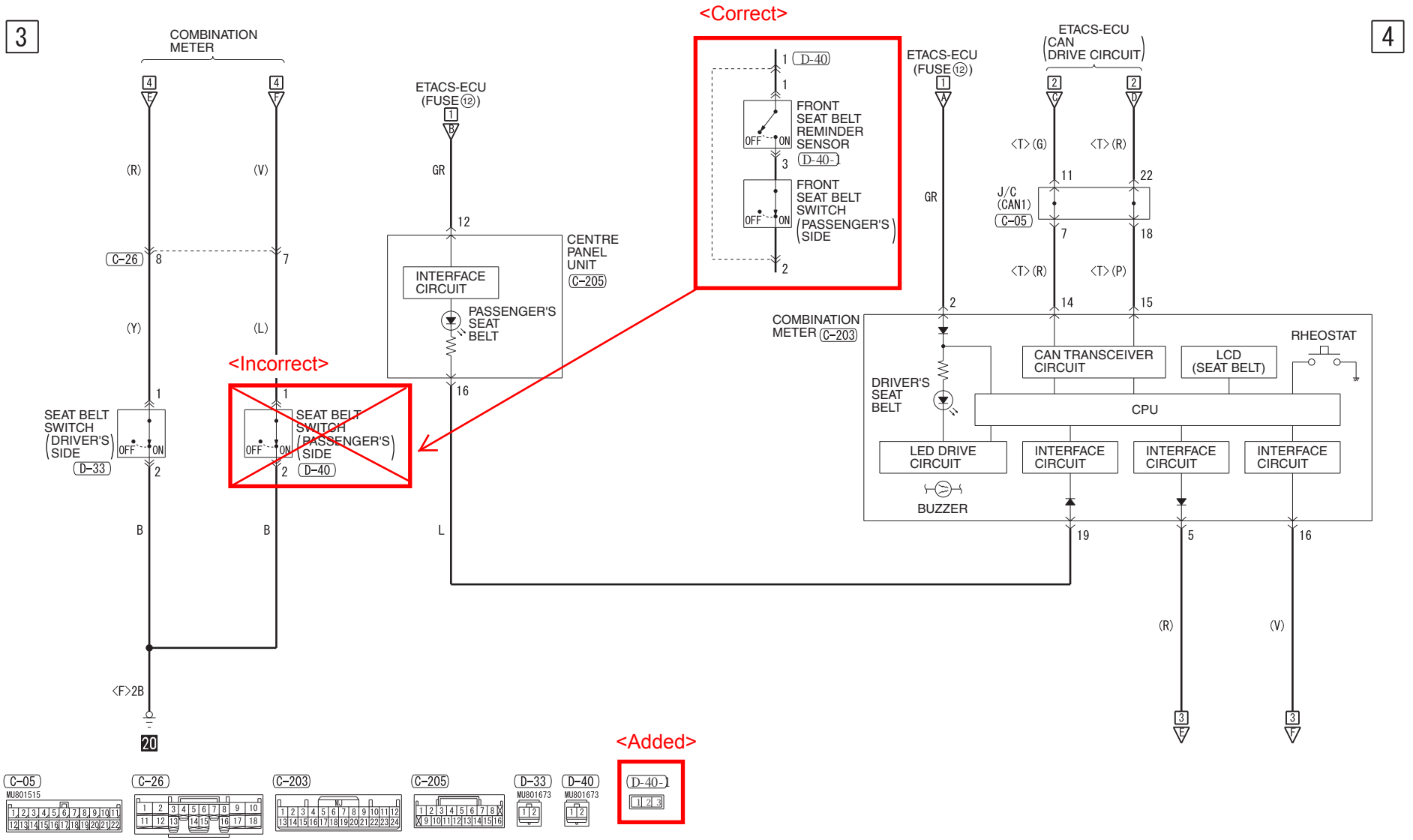

Wire colour code
B : Black LG : Light green G : Green L : Blue W : White Y : Yellow SB : Sky blue
BR : Brown O : Orange GR : Grey R : Red P : Pink V : Violet PU : Purple SI : Silver

Attached sheet 11

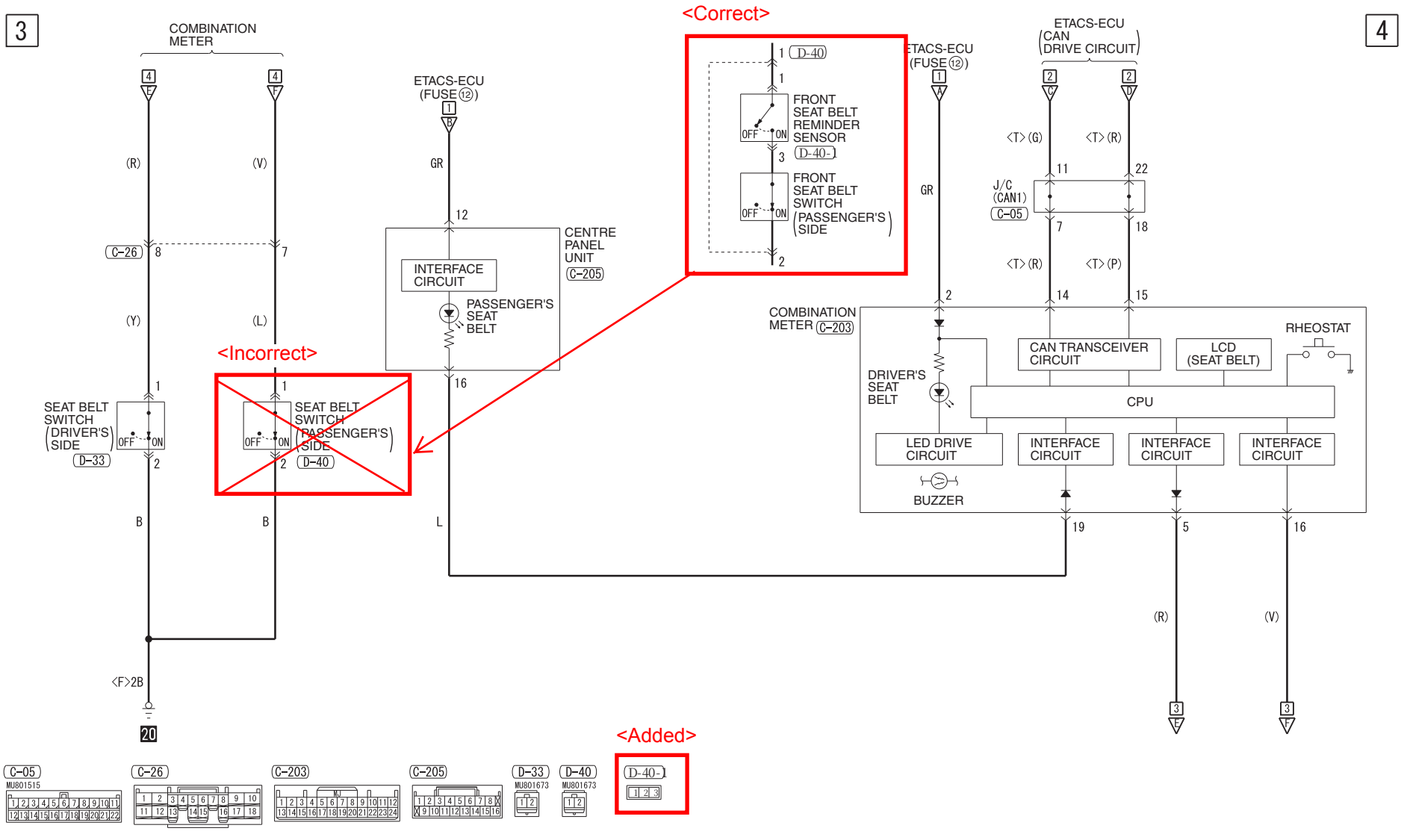

Wire colour code
B : Black LG : Light green G : Green L : Blue W : White Y : Yellow SB : Sky blue
BR : Brown O : Orange GR : Grey R : Red P : Pink V : Violet PU : Purple SI : Silver