SERVICE BULLETIN

MITSUBISHI MOTORS

GLOBAL AFTER SALES OFFICE, MITSUBISHI MOTORS CORPORATION

PURPOSE : CHANGE	ISSUE NO. : MSB-15EXL54-001	DATE : 2015-02-18
SUBJECT : Changes and addition of the descriptions about o-ring		<DESTINATION/MODEL> <M/Y> (As per attached sheet 1) 14-14.5
GROUP : Gr:54(Chassis electrical)		Outlander PHEV(GG0W)

1. Description :

Please refer to the attached document for the information about the change of mention in the applicable service manual.

2. Affected service manuals :

Please refer to the attached document (Attached sheet 1)

3. About the details :

Please refer to the attached document (Attached sheet 4-5)

Attached sheet 1

For overseas market

【EU】

Applicable manual	Pub. No.	Applicable title (INFO-ID)	Contents
2014 OUTLANDER/PHEV Workshop Manual	CGFE14E2-CD (ENG) CGFF14E2-CD (FRE) CGFG14E2-CD (GER) CGFS14E2-CD (SPA) CGFI14E2-CD (ITA)	LUBRICANTS (M549-40-320-03200-01)	Attached sheet 4
2014.5 OUTLANDER/PHEV Workshop Manual	CGFE14E3-CD (ENG) CGFF14E3-CD (FRE) CGFG14E3-CD (GER) CGFS14E3-CD (SPA) CGFI14E3-CD (ITA)	LUBRICANTS (M549-40-320-03200-01)	Attached sheet 4
		DRIVE BATTERY REMOVAL AND INSTALLATION (M549-40-130-16301-01)	Attached sheet 5

【MMAL/NZ】

Applicable manual	Pub. No.	Applicable title (INFO-ID)	Content
2014 OUTLANDER/PHEV Workshop Manual	MMAL:AU900408 NZ:DRAFT	LUBRICANTS (M549-40-320-04300-01)	Attached sheet 4

<Deleted>

LUBRICANT

Item	Specified lubricant	Quantity	Remark
O-ring (for the traction battery cable)	NIGLUBE RM or equivalent	As required	Brake grease

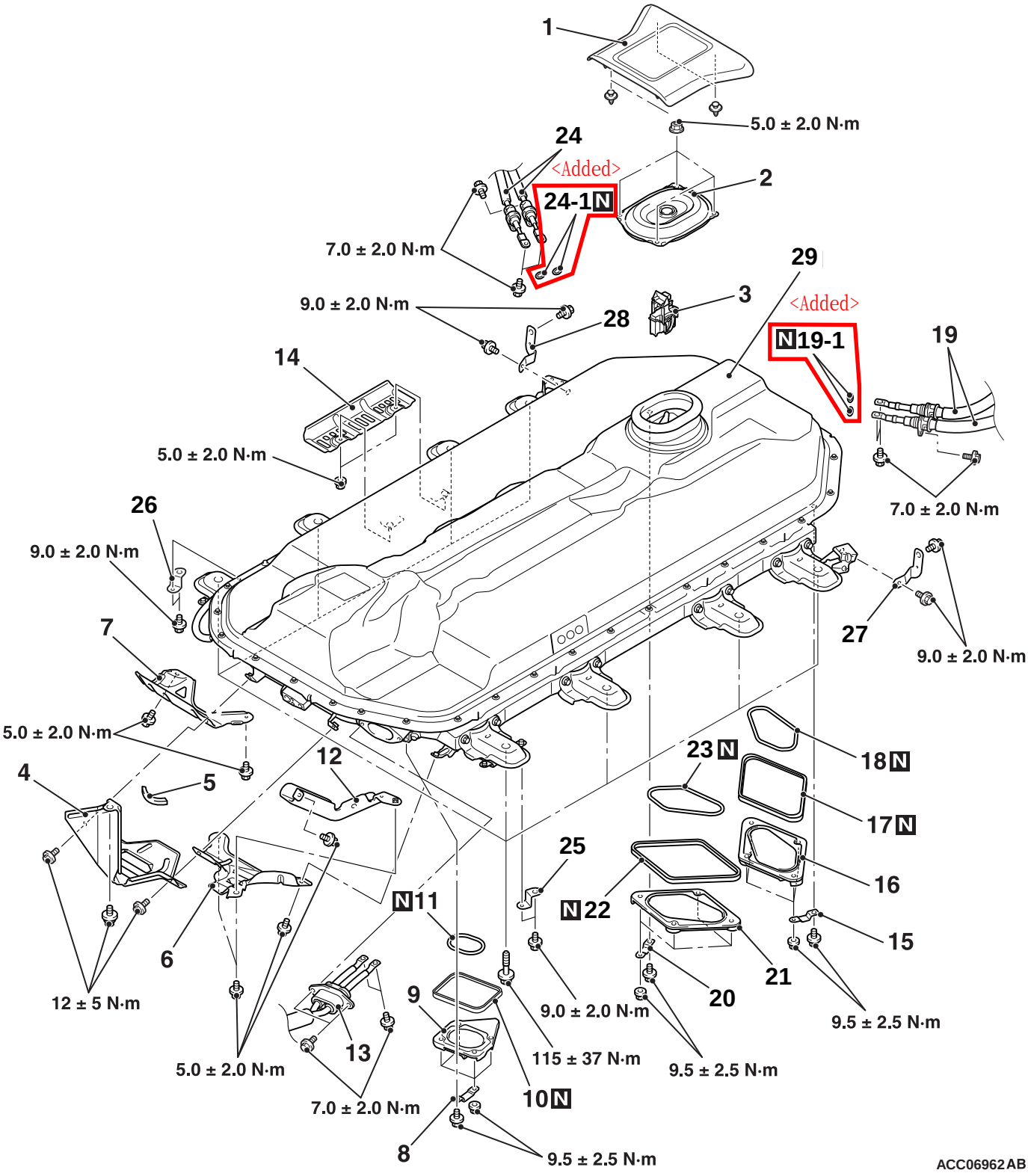

Removal steps

<<A>> >>H<< 1. Service lid cover
<<A>> >>H<< 2. Service lid
<<A>> >>H<< 3. Service plug
4. Battery front centre protector
>>G<< 5. Battery front centre protector pad
6. Battery front protector <LH>

Removal steps

7. Battery front centre protector <RH>
>>D<< 8. Battery earth bracket
9. Work-hole lid <front>
10. Work-hole lid pad <front>
11. O-ring

Removal steps

		12. Cable protector
<<B>>	>>F<<	13. drive battery front cable (P, N line) connection
		14. Battery side protector
	>>D<<	15. Battery earth bracket
		16. Work-hole lid <rear>
	>>C<<	17. Work-hole lid pad <rear>
		18. O-ring
<<C>>	>>E<<	19. Drive battery rear cable (P, N line) connection
	<Added>	19-1. O-ring
	>>D<<	20. Battery earth bracket
		21. Work-hole lid <rear> <Vehicle compatible with quick charging>
	>>C<<	22. Work-hole lid pad <rear> <Vehicle compatible with quick charging>
		23. O ring <Vehicle compatible with quick charging>
<<D>>	>>B<<	24. EV charger cable (Quick charging P, N line) connection <Vehicle compatible with quick charging>
	<Added>	24-1. O ring <Vehicle compatible with quick charging>
		25. Battery earth bracket
		26. Battery earth bracket
		27. Battery earth bracket <LH>
		28. Battery earth bracket <RH>
<<E>>	>>A<<	29. Drive battery assembly