SERVICE BULLETIN

MITSUBISHI MOTORS

GLOBAL AFTER SALES OFFICE, MITSUBISHI MOTORS CORPORATION

PURPOSE : CHANGE	ISSUE NO. : MSB-15EXML55-002	DATE : 2015-07-24
SUBJECT : Addition of the reassembly points of the fin thermo sensor in the disassembly and reassembly of the heater unit and blower assembly		<DESTINATION/MODEL> (As per attached sheet 1) <M/Y> 07-15.5
GROUP : Gr:55 (Heater/Air conditioner)		

1. Description :

Please refer to the attached document for the information about the change of mention in the applicable service manual.

2. Affected service manuals :

Please refer to the attached document (Attached sheet 1)

3. About the details :

Please refer to the attached document (Attached sheet 6-18)

For overseas market

<EU/RUSSIA>

Attached sheet 1

Applicable manual	Pub. No.	Applicable title (INFO ID)	Contents
2008 LANCER Workshop manual	CG1E08E2-CD (ENG) CG1F08E2-CD (FRE) CG1G08E2-CD (GER) CG1S08E2-CD (SPA) RUSSIA:N/A	Heater unit and blower assembly disassembly and reassembly (M552-02-090-28500-01)	Attached sheet 6
2009 LANCER SPORTBACK Workshop manual	CG4E09E1-CD (ENG) CG4F09E1-CD (FRE) CG4G09E1-CD (GER) CG4S09E1-CD (SPA) CG4I09E1-CD (ITA) RUSSIA:N/A	Heater unit and blower assembly disassembly and reassembly (M552-02-090-42300-01)	
2011 LANCER/ LANCER SPORTBACK Workshop manual	CG1E11E1-CD (ENG) CG1F11E1-CD (FRE) CG1G11E1-CD (GER) CG1S11E1-CD (SPA) CG1I11E1-CD (ITA) RUSSIA:N/A	Heater unit and blower assembly disassembly and reassembly (M552-02-090-70200-01)	
2012 LANCER/ LANCER SPORTBACK Workshop manual	CG1E12E1-CD (ENG) CG1F12E1-CD (FRE) CG1G12E1-CD (GER) CG1S12E1-CD (SPA) CG1I12E1-CD (ITA) RUSSIA:N/A	Heater unit and blower assembly disassembly and reassembly (M552-02-090-70200-01)	
2013 LANCER/ LANCER SPORTBACK Workshop manual	CCAE13E1-CD (ENG) CCAF13E1-CD (FRE) CCAG13E1-CD (GER) CCAS13E1-CD (SPA) CCAI13E1-CD (ITA) RUSSIA:N/A	Heater unit and blower assembly disassembly and reassembly (M552-02-090-90600-01)	
2014 LANCER/ LANCER SPORTBACK Workshop manual	CCAE14E1-CD (ENG) CCAF14E1-CD (FRE) CCAG14E1-CD (GER) CCAS14E1-CD (SPA) CCAI14E1-CD (ITA) RUSSIA:N/A	Heater unit and blower assembly disassembly and reassembly (M552-02-090-90600-01)	
2015 LANCER/ LANCER SPORTBACK Workshop manual	CCAE15E1-CD (ENG) CCAF15E1-CD (FRE) CCAG15E1-CD (GER) CCAS15E1-CD (SPA) CCAI15E1-CD (ITA) RUSSIA:N/A	Heater unit and blower assembly disassembly and reassembly (M552-02-090-90601-01)	
2011 ASX Workshop manual	CGWE11E2-CD (ENG) CGWF11E2-CD (FRE) CGWG11E2-CD (GER) CGWS11E2-CD (SPA) CGWI11E2-CD (ITA) RUSSIA:N/A	Heater unit and blower assembly disassembly and reassembly (M552-02-090-72400-01)	Attached sheet 7
2012 ASX Workshop manual	CGWE12E1-CD (ENG) CGWF12E1-CD (FRE) CGWG12E1-CD (GER) CGWS12E1-CD (SPA) CGWI12E1-CD (ITA) RUSSIA:N/A	Heater unit and blower assembly disassembly and reassembly (M552-02-090-73500-01)	
2013 ASX Workshop manual	CGAE13E2-CD (ENG) CGAF13E2-CD (FRE) CGAG13E2-CD (GER) CGAS13E2-CD (SPA) CGAI13E2-CD (ITA) RUSSIA:N/A	Heater unit and blower assembly disassembly and reassembly (M552-02-090-93900-01)	
2014 ASX Workshop manual	CGAE14E1-CD (ENG) CGAF14E1-CD (FRE) CGAG14E1-CD (GER) CGAS14E1-CD (SPA) CGAI14E1-CD (ITA)	Heater unit and blower assembly disassembly and reassembly (M552-02-090-93900-01)	

	RUSSIA:N/A		
2015 ASX Workshop manual	CGAE15E1-CD (ENG) CGAF15E1-CD (FRE) CGAG15E1-CD (GER) CGAS15E1-CD (SPA) CGAI15E1-CD (ITA) RUSSIA:N/A	Heater unit and blower assembly disassembly and reassembly (M552-02-090-93900-01)	
2015.5 ASX Workshop manual	CGAE15E2-CD (ENG) CGAF15E2-CD (FRE) CGAG15E2-CD (GER) CGAS15E2-CD (SPA) CGAI15E2-CD (ITA) RUSSIA:N/A	Heater unit and blower assembly disassembly and reassembly (M552-02-090-93900-01)	

<EU/GENERAL EXPORT/MMAL/NZ>

Applicable manual	Pub. No.	Applicable title (INFO ID)	Content
2012 PEUGEOT 4008/ CITROEN C4 AIRCROSS (PZC) Workshop manual	PEUGEOT/CITROEN: N/A MMAL/NZ:DRAFT	Heater unit and blower assembly disassembly and reassembly (M552-02-090-73500-01)	Attached sheet 7

<GENERAL EXPORT/GCC>

Applicable manual	Pub. No.	Applicable title (INFO ID)	Contents
2008 LANCER/LANCER EX Workshop manual	PWME0701R (ENG) PWMS0702R (SPA)	Heater unit and blower assembly disassembly and reassembly (M552-02-090-25200-01)	Attached sheet 8
2009 LANCER/LANCER EX Workshop manual	PWME0802R (ENG) PWMS0803R (SPA)	Heater unit and blower assembly disassembly and reassembly (M552-02-090-45600-01)	
2010 LANCER/LANCER EX Workshop manual	PWME0901R (ENG) PWMS0902R (SPA)	Heater unit and blower assembly disassembly and reassembly (M552-02-090-45600-01)	
2011 LANCER/LANCER EX Workshop manual	PWME1010R (ENG) PWMS1011R (SPA)	Heater unit and blower assembly disassembly and reassembly (M552-02-090-45600-01)	
2012 LANCER/LANCER EX Workshop manual	PWME1111R (ENG) PWMS1112R (SPA)	Heater unit and blower assembly disassembly and reassembly (M552-02-090-45600-01)	
2013 LANCER/LANCER EX Workshop manual	PWME1202R (ENG) PWMS1203R (SPA)	Heater unit and blower assembly disassembly and reassembly (M552-02-090-86500-01)	Attached sheet 9
2015 LANCER/LANCER EX Workshop manual	PWME1403R (ENG) PWMS1404R (SPA)	Heater unit and blower assembly disassembly and reassembly (M552-02-090-86500-01)	

<CHINA>

Applicable manual	Pub. No.	Applicable title (INFO ID)	Content
2009 LANCER EX Workshop manual	DRAFT	Heater unit and blower assembly disassembly and reassembly (M552-02-090-51900-01)	Attached sheet 8

<MMAL/NZ>

Applicable manual	Pub. No.	Applicable title (INFO ID)	Content
2008 LANCER Workshop manual	MMAL:MR936470 NZ:DRAFT	Heater unit and blower assembly disassembly and reassembly (M552-02-090-29600-01)	Attached sheet 10
2009 LANCER Workshop manual	MMAL:MR936503 NZ:DRAFT	Heater unit and blower assembly disassembly and reassembly (M552-02-090-48900-01)	
2009 LANCER SPORTBACK	MMAL:MR936570 NZ:DRAFT	Heater unit and blower assembly disassembly and reassembly	

Workshop manual		(M552-02-090-48900-01)	
2010 LANCER Workshop manual	MMAL:MR936920 NZ:DRAFT	Heater unit and blower assembly disassembly and reassembly (M552-02-090-48900-01)	
2010 LANCER SPORTBACK Workshop manual	MMAL:MR936922 NZ:DRAFT	Heater unit and blower assembly disassembly and reassembly (M552-02-090-48900-01)	
2011 LANCER Workshop manual	MMAL:AU900048 NZ:DRAFT	Heater unit and blower assembly disassembly and reassembly (M552-02-090-48900-01)	
2011 LANCER SPORTBACK Workshop manual	MMAL:AU900050 NZ:DRAFT	Heater unit and blower assembly disassembly and reassembly (M552-02-090-42300-01)	

<MMAL/NZ>

Applicable manual	Pub. No.	Applicable title (INFO ID)	Contents
2012 LANCER Workshop manual	MMAL:AU900216 NZ:DRAFT	Heater unit and blower assembly disassembly and reassembly (M552-02-090-48900-01)	Attached sheet 10
2012 LANCER SPORTBACK Workshop manual	MMAL:AU900217 NZ:DRAFT	Heater unit and blower assembly disassembly and reassembly (M552-02-090-42300-01)	
2013 LANCER Workshop manual	MMAL:AU900298 NZ:DRAFT	Heater unit and blower assembly disassembly and reassembly (M552-02-090-97300-01)	Attached sheet 12
2013 LANCER SPORTBACK Workshop manual	MMAL:AU900299 NZ:DRAFT	Heater unit and blower assembly disassembly and reassembly (M552-02-090-97300-01)	
2015 LANCER Workshop manual	MMAL:AU900420 NZ:DRAFT	Heater unit and blower assembly disassembly and reassembly (M552-02-090-97300-01)	
2015 LANCER SPORTBACK Workshop manual	MMAL:AU900421 NZ:DRAFT	Heater unit and blower assembly disassembly and reassembly (M552-02-090-97300-01)	

<GENERAL EXPORT >

Applicable manual	Pub. No.	Applicable title (INFO ID)	Content
2007 DELICA D:5 Workshop manual	PWRE0711R	Heater unit and blower assembly disassembly and reassembly (M552-02-090-24100-01)	Attached sheet 11
2009 DELICA D:5 Workshop manual	PWRE0804R	Heater unit and blower assembly disassembly and reassembly (M552-02-090-24100-01)	
2010 DELICA D:5 Workshop manual	MSB-10X00-008	Heater unit and blower assembly disassembly and reassembly (M552-02-090-24100-01)	
2011 DELICA D:5 Workshop manual	MSB-10X00-025	Heater unit and blower assembly disassembly and reassembly (M552-02-090-24100-01)	

<GENERAL EXPORT (Indonesia/Brunei/Thailand)>

Applicable manual	Pub. No.	Applicable title (INFO ID)	Content
2015 DELICA D:5 Workshop manual	DRAFT	Heater unit and blower assembly disassembly and reassembly (M552-02-090-87600-01)	Attached sheet 12

<GENERAL EXPORT/MMAL/NZ >

Applicable manual	Pub. No.	Applicable title (INFO ID)	Contents
2011 ASX Workshop manual	PWPE1006R (ENG) PWPS1007R (SPA) MMAL/NZ:DRAFT	Heater unit and blower assembly disassembly and reassembly (M552-02-090-68300-01)	Attached sheet 13
2012 ASX Workshop manual	PWPE1107R (ENG) PWPS1108R (SPA) MMAL/NZ:DRAFT	Heater unit and blower assembly disassembly and reassembly (M552-02-090-68300-01)	
2013 ASX Workshop manual	G.EXP/GCC: PWPE1204R (ENG) PWPS1205R (SPA) MMAL:AU900409 NZ:DRAFT	Heater unit and blower assembly disassembly and reassembly (M552-02-090-88700-01)	Attached sheet 14
2014 ASX Workshop manual	G.EXP/GCC: PWPE1312R (ENG) PWPS1313R (SPA) MMAL:AU900410 NZ:DRAFT	Added below “General information” (M551-00-011-18000-01)	Attached sheet 15
2015 ASX Workshop manual	G.EXP/GCC: PWPE1412R (ENG) PWPS1413R (SPA) MMAL:AU900418 NZ:DRAFT	Added below “General information” (M552-02-090-73500-01)	

<MMNA>

Applicable manual	Pub. No.	Applicable title (INFO ID)	Contents
2008 LANCER Service manual	MSCD-106B-2008	Heater unit and blower assembly disassembly and reassembly (M552-02-090-23000-01)	Attached sheet 16
2009 LANCER Service manual	MSCD-106B-2009	Heater unit and blower assembly disassembly and reassembly (M552-02-090-23001-01)	
2009 LANCER SPORTBACK Service manual	MSCD-014B-2009	Heater unit and blower assembly disassembly and reassembly (M552-02-090-54200-01)	
2010 LANCER Service manual	MSCD-106B-2010	Heater unit and blower assembly disassembly and reassembly (M552-02-090-64900-01)	
2010 LANCER SPORTBACK Service manual	MSCD-014B-2010	Heater unit and blower assembly disassembly and reassembly (M552-02-090-54200-01)	
2011 LANCER/ LANCER SPORTBACK Service manual	MSCD-106B-2011	Heater unit and blower assembly disassembly and reassembly (M552-02-090-74600-01)	
2012 LANCER/ LANCER SPORTBACK Service manual	MSCD-106B-2012	Heater unit and blower assembly disassembly and reassembly (M552-02-090-74600-01)	
2013 LANCER/ LANCER SPORTBACK Service manual	MSCD-106B-2013	Heater unit and blower assembly disassembly and reassembly (M552-02-090-91700-01)	
2014 LANCER/ LANCER SPORTBACK Service manual	MSCD-106B-2014	Heater unit and blower assembly disassembly and reassembly (M552-02-090-91701-01)	
2015 LANCER/ LANCER SPORTBACK Service manual	MSCD-106B-2015	Heater unit and blower assembly disassembly and reassembly (M552-02-090-91701-01)	
2011 OUTLANDER SPORT/ ASX/RVR Service manual	MSCD-017B-2011	Heater unit and blower assembly disassembly and reassembly (M552-02-090-77900-01)	Attached sheet 17
2012 OUTLANDER SPORT/ ASX/RVR Service manual	MSCD-017B-2012	Heater unit and blower assembly disassembly and reassembly (M552-02-090-77900-01)	
2013 OUTLANDER SPORT/ ASX/RVR Service manual	MSCD-017B-2013	Heater unit and blower assembly disassembly and reassembly (M552-02-090-95100-01)	
2014 OUTLANDER SPORT ASX/RVR Service manual	MSCD-017B-2014	Heater unit and blower assembly disassembly and reassembly (M552-02-090-95100-01)	
2015 OUTLANDER SPORT ASX/RVR Service manual	MSCD-017B-2015	Heater unit and blower assembly disassembly and reassembly (M552-02-090-95100-01)	

<KOREA>

Applicable manual	Pub. No.	Applicable title (INFO ID)	Content
2013 RVR Service manual	DRAFT	Heater unit and blower assembly disassembly and reassembly (M552-02-091-00600-01)	Attached sheet 18

LANCER/LANCER SPORTBACK (EU/RUSSIA)

DISASSEMBLY AND REASSEMBLY <VEHICLES UP TO 2012 MODELS>

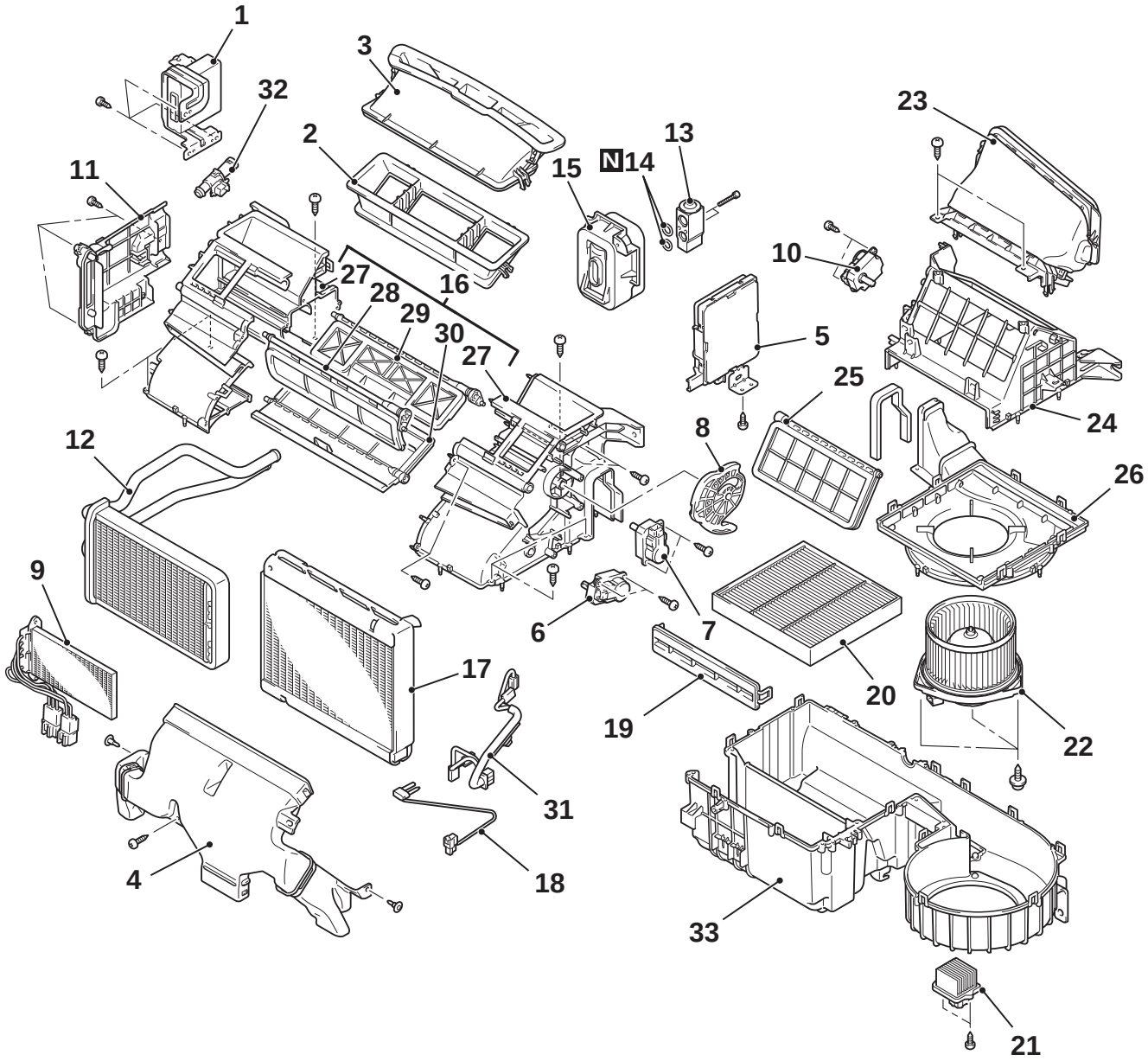

ACA00925AB

Disassembly steps

1. KOS-ECU
2. Rear centre duct
3. Front centre duct
4. Foot duct
5. Heater control unit <Vehicles without A/C> or A/C-ECU <Vehicles with A/C>
6. Air mixing damper control motor
7. Mode selection damper control motor
8. Mode lever
9. PTC heater <Diesel engine>

Disassembly steps (Continued)

10. Outside/Inside air selection damper control motor
11. Heater core cover
12. Heater core
13. Expansion valve
14. O-ring
15. Expansion valve cover
16. Upper case assembly
17. Evaporator

>>A<<
<Added>

18. Fin thermo sensor
19. Air filter cover
20. Air filter

Disassembly steps (Continued)

21. Power transistor
22. Blower motor
23. Air intake duct
24. Blower case upper
25. Outside/inside air selection damper
26. Blower case lower
27. Upper case
28. Mode selection damper (FOOT)

Disassembly steps (Continued)

29. Mode selection damper (DEF)
30. Air mixing damper
31. Wiring harness
32. Aspirator
33. Lower case

<VEHICLES FROM 2013 MODELS>

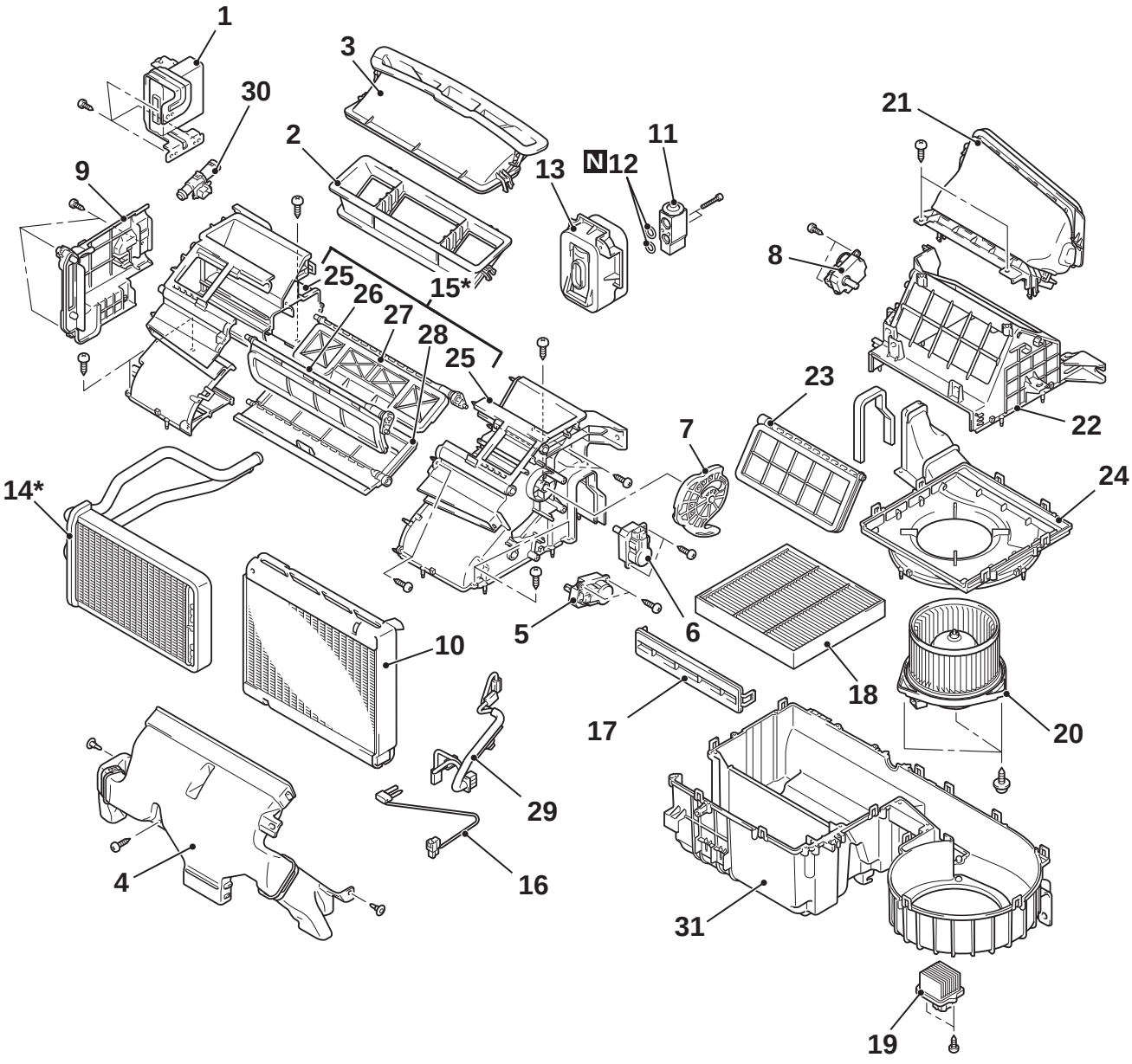

* For disassembly steps for the heater core and the upper case assembly on RHD, refer to NOTE.

ACF02769AB

Disassembly steps

1. KOS-ECU
2. Rear centre duct
3. Front centre duct
4. Foot duct
5. Air mixing damper control motor

Disassembly steps (Continued)

6. Mode selection damper control motor
7. Mode lever
8. Outside/Inside air selection damper control motor
9. Heater core cover

Disassembly steps (Continued)

10. Evaporator
11. Expansion valve
12. O-ring
13. Expansion valve cover <LHD>
14*. Heater core
15*. Upper case assembly

>>A<<
<Added>

16. Fin thermo sensor
17. Air filter cover
18. Air filter
19. Power transistor
20. Blower motor
21. Air intake duct
22. Blower case upper
23. Outside/inside air selection damper
24. Blower case lower
25. Upper case
26. Mode selection damper (FOOT)
27. Mode selection damper (DEF)
28. Air mixing damper
29. Wiring harness
30. Aspirator
31. Lower case

NOTE:

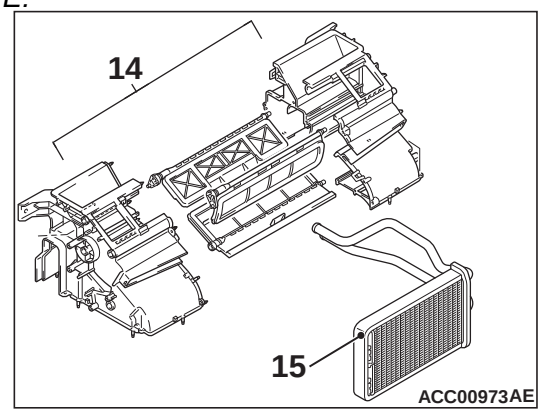

** For disassembly steps for the heater core and the upper case assembly on RHD, refer to the followings (note that they are different those on LHD).*

Disassembly steps	
14.	Upper case assembly
15.	Heater core

REASSEMBLY SERVICE POINT

>>A<< FIN THERMO SENSOR INSTALLATION

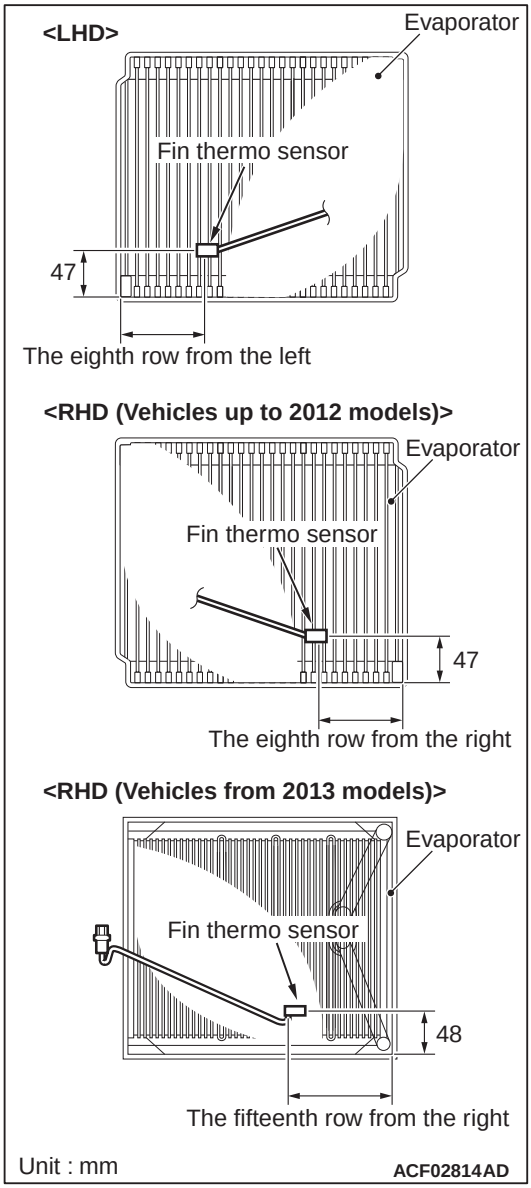

Install the fin thermo sensor at the position shown in the figure.

<Added>

ASX (EU/RUSSIA)
PEUGEOT 4008/CITREN C4 AIRCROSS (EU/G.EXP/MMAL/NZ)

DISASSEMBLY AND REASSEMBLY
<VEHICLES UP TO 2012 MODELS>

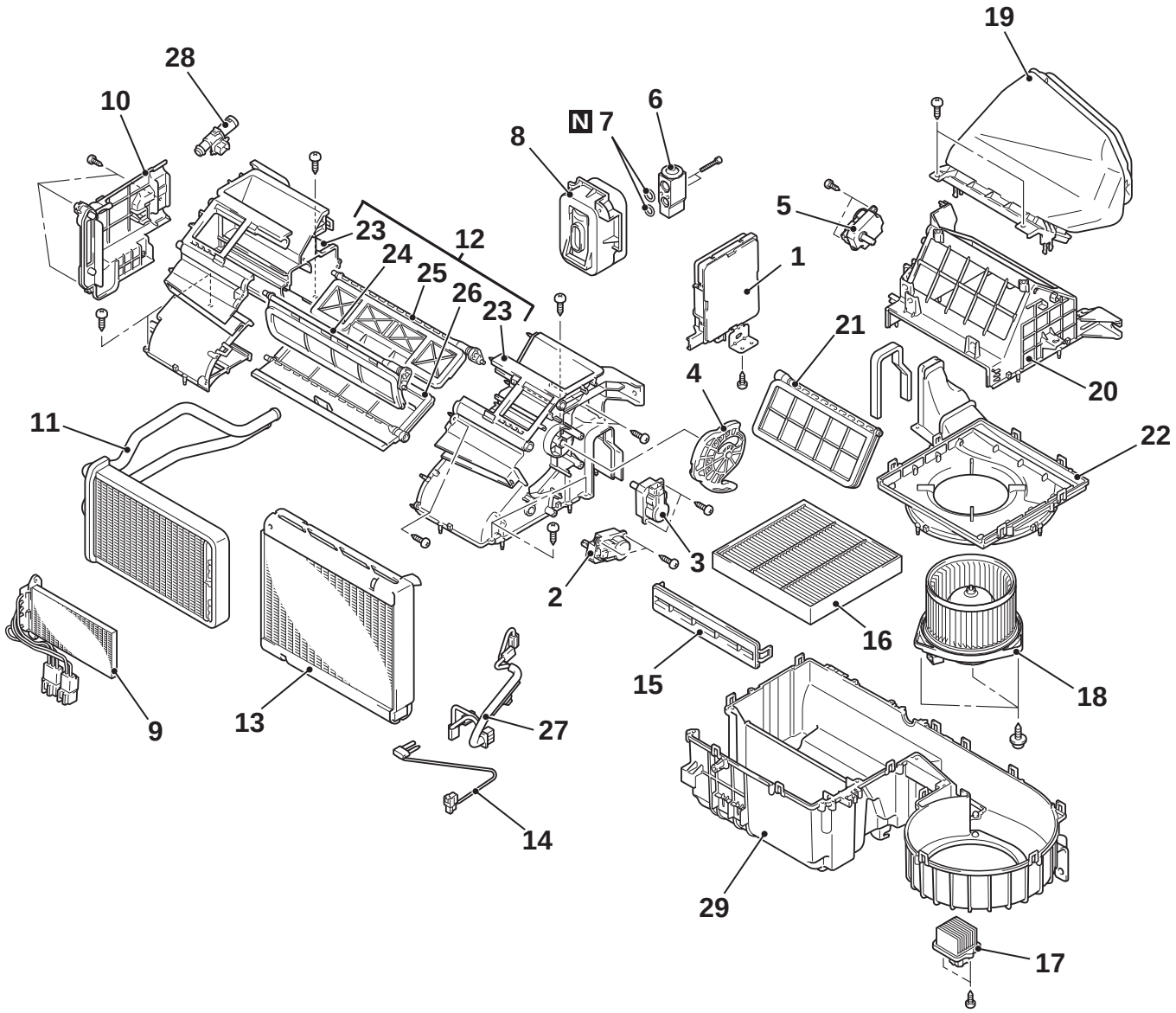

AC905281AD

Disassembly steps

1. Heater control unit <Vehicles without A/C> or A/C-ECU <Vehicles with A/C>
2. Air mixing damper control motor
3. Mode selection damper control motor
4. Mode lever
5. Outside/Inside air selection damper control motor
6. Expansion valve
7. O-ring
8. Expansion valve cover

Disassembly steps (Continued)

9. PTC heater
10. Heater core cover
11. Heater core
12. Upper case assembly
13. Evaporator

>>A<<
<Added>

14. Fin thermo sensor
15. Clean air filter cover
16. Clean air filter
17. Power transistor
18. Blower motor
19. Air intake duct
20. Blower case upper

Disassembly steps (Continued)

21. Outside/inside air selection damper
22. Blower case lower
23. Upper case
24. Mode selection damper (FOOT)
25. Mode selection damper (DEF)
26. Air mixing damper

Disassembly steps (Continued)

27. Wiring harness
28. Aspirator
29. Lower case

<VEHICLES FROM 2013 MODELS>

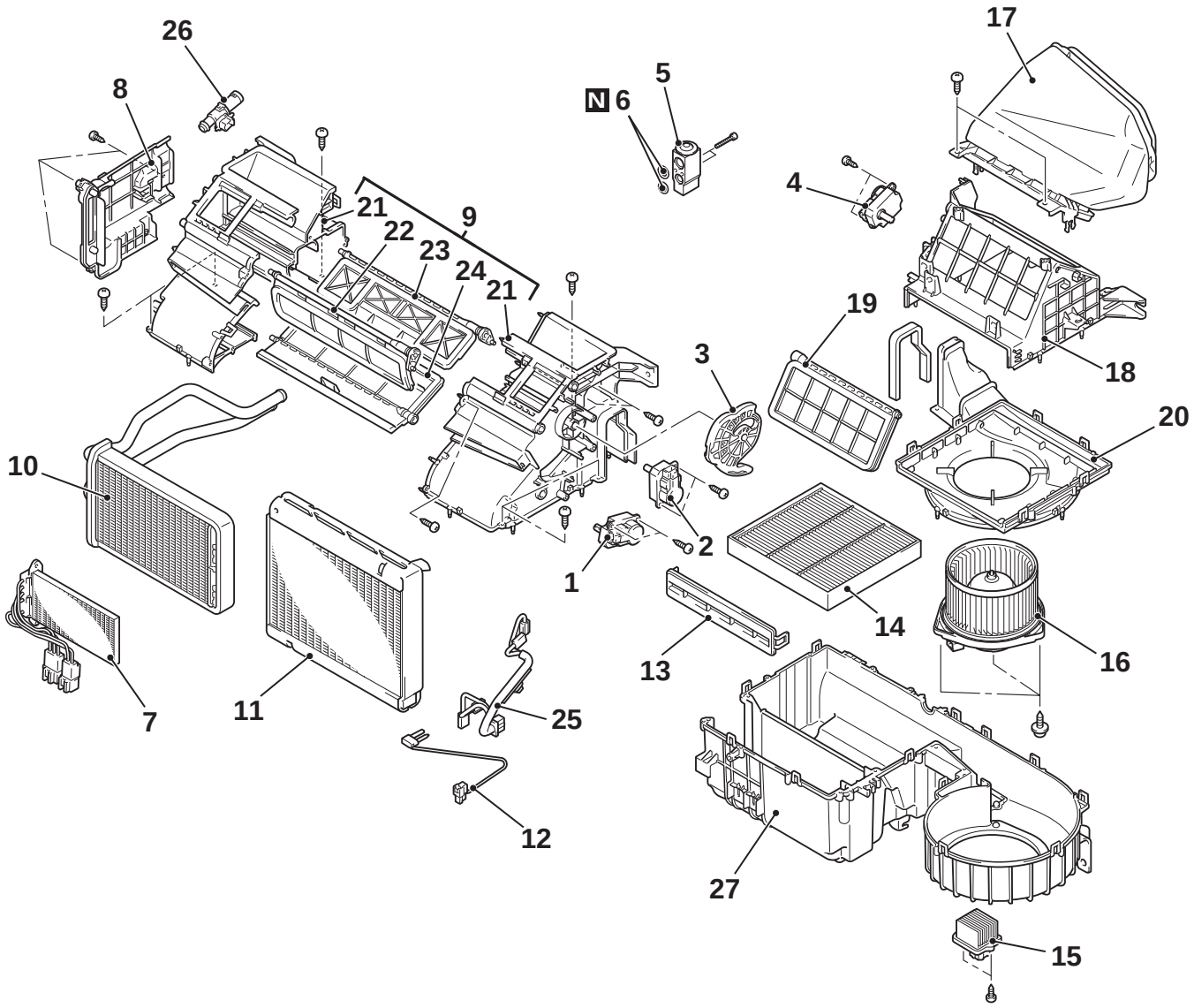

ACC01996AC

Disassembly steps

1. Air mixing damper control motor
2. Mode selection damper control motor
3. Mode lever
4. Outside/Inside air selection damper control motor
5. Expansion valve
6. O-ring
7. PTC heater <Diesel engine (Option)>

<<A>>

>>A<<

<Added>

Disassembly steps (Continued)

8. Heater core cover
9. Upper case assembly
10. Heater core
11. Evaporator
12. Fin thermo sensor
13. Clean air filter cover
14. Clean air filter
15. Power transistor
16. Blower motor
17. Air intake duct
18. Blower case upper

Disassembly steps (Continued)

19. Outside/inside air selection damper
20. Blower case lower
21. Upper case
22. Mode selection damper (FOOT)
23. Mode selection damper (DEF)
24. Air mixing damper
25. Wiring harness
26. Aspirator
27. Lower case

DISASSEMBLY SERVICE POINT <VEHICLES FROM 2013 MODELS>

<<A>> HEATER CORE REMOVAL

The heater core should be removed after the upper case assembly is disassembled.

REASSEMBLY SERVICE POINT

>>A<< FIN THERMO SENSOR INSTALLATION

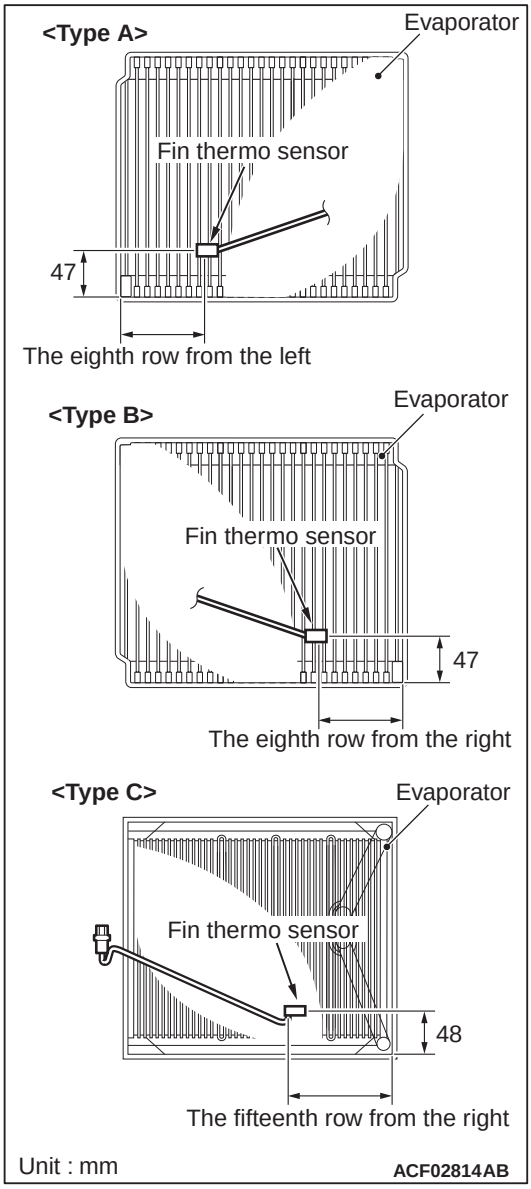

Install the fin thermo sensor at the position shown in the figure.

NOTE: Where the fin thermo sensor should be installed depends on where and when the vehicle has been produced.

Production country and date			Installation position
Vehicles produced in JAPAN	Vehicles up to 2012 models	LHD	Type A
		RHD	Type B
	Vehicles from 2013 models	LHD/RHD	Type C
Vehicles produced in MMNA	Vehicles up to Nov. 2013		Type C
	Vehicles from Dec. 2013		Type B

<Added>

DISASSEMBLY AND REASSEMBLY

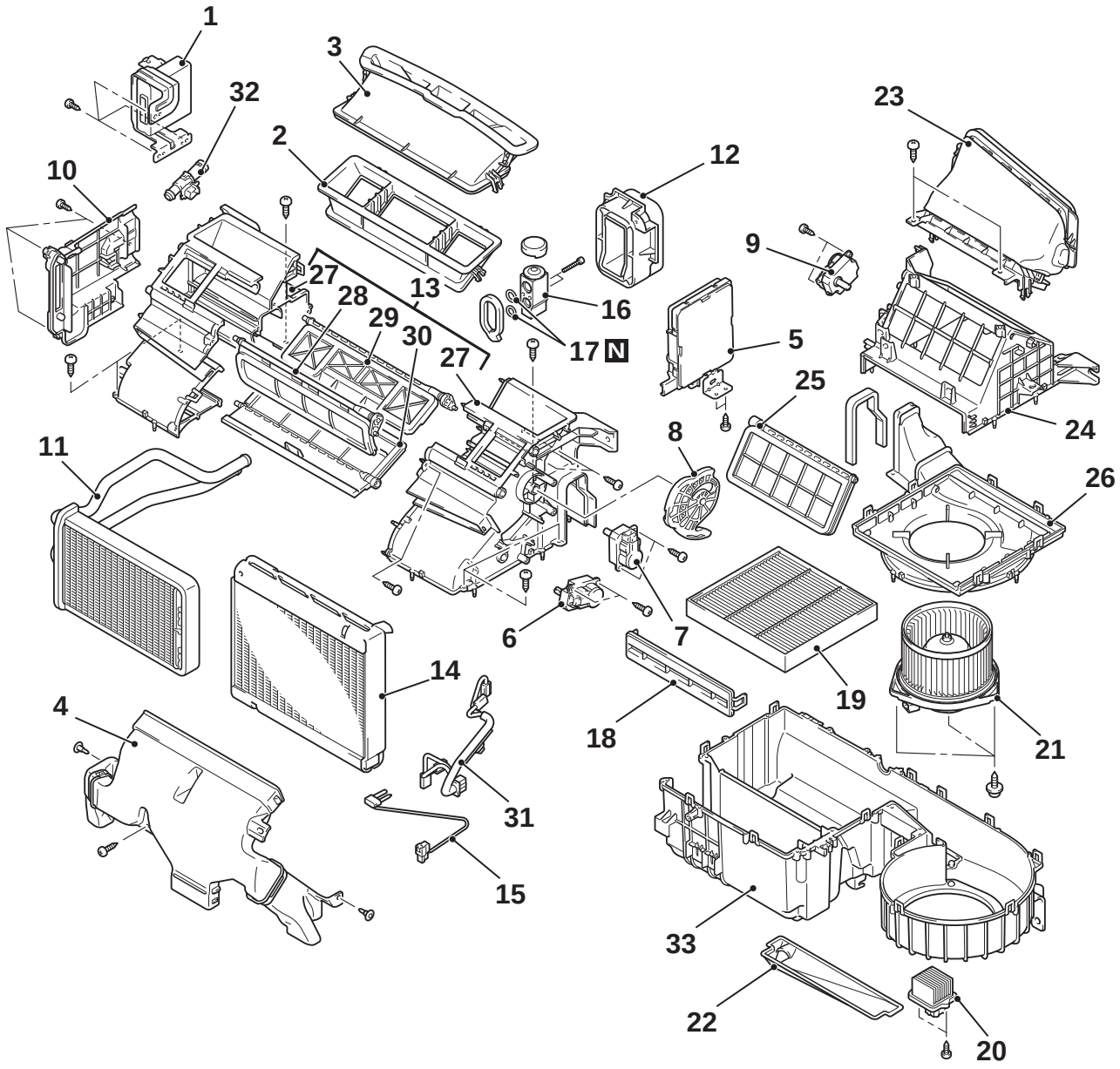

AC608203AD

Disassembly steps

1. KOS-ECU
2. Rear centre duct
3. Front centre duct
4. Foot duct
5. Heater control unit <Vehicles without A/C> or A/C-ECU <Vehicles with A/C>
6. Air mixing damper control motor
7. Mode selection damper control motor
8. Mode lever
9. Outside/Inside air selection damper control motor
10. Heater core cover

>>A<<
<Added>

Disassembly steps (Continued)

11. Heater core
12. Expansion valve cover
13. Upper case assembly
14. Evaporator
15. Fin thermo sensor
16. Expansion valve
17. O-ring
18. Air filter cover
19. Air filter
20. Power transistor
21. Blower motor
22. Insulator
23. Air intake duct
24. Blower case upper

Disassembly steps (Continued)

25. Outside/inside air selection damper
26. Blower case lower
27. Upper case
28. Mode selection damper (FOOT)
29. Mode selection damper (DEF)
30. Air mixing damper
31. Wiring harness
32. Aspirator
33. Lower case

REASSEMBLY SERVICE POINT

>>A<< FIN THERMO SENSOR INSTALLATION

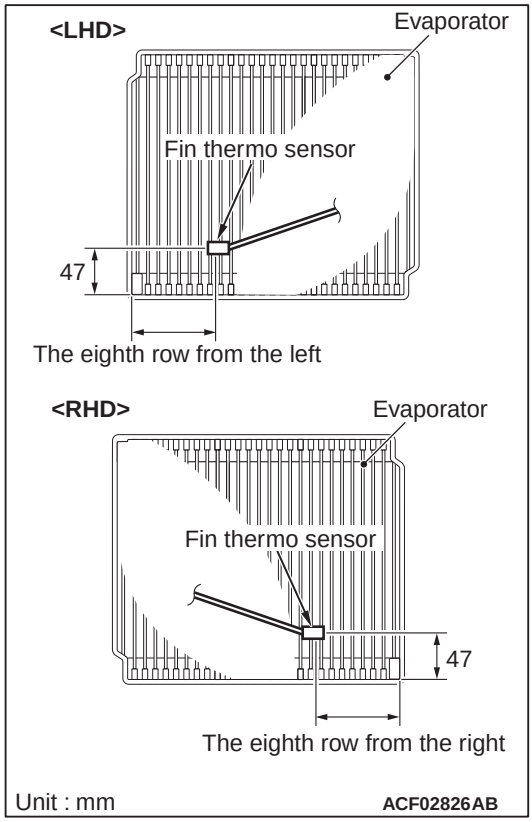

Install the fin thermo sensor at the position shown in the figure.

<Added>

DISASSEMBLY AND REASSEMBLY

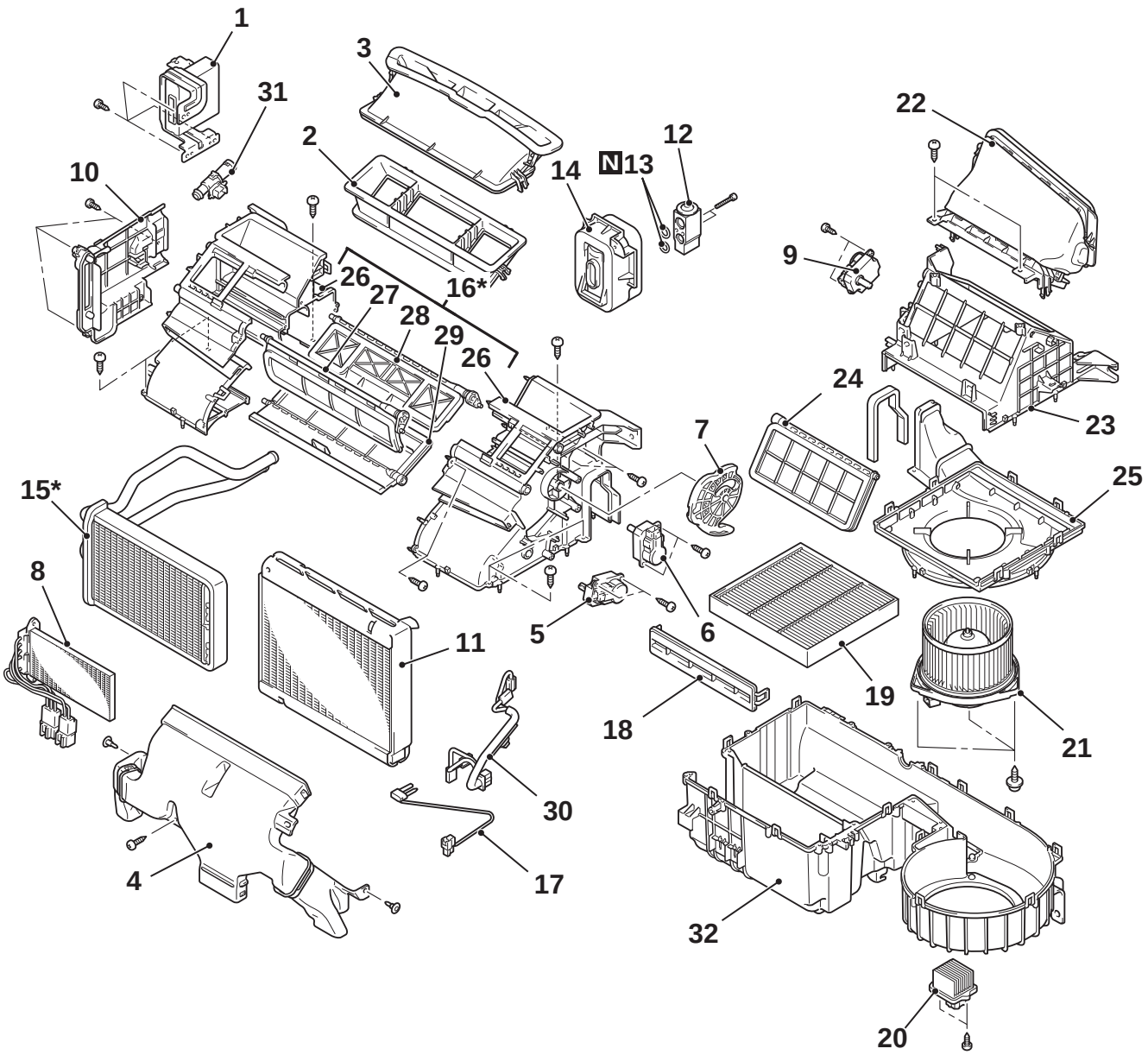

* For disassembly steps for the heater core and the upper case assembly on RHD, refer to NOTE.

ACC00978AB

Disassembly steps

1. KOS-ECU
2. Rear centre duct
3. Front centre duct
4. Foot duct
6. Air mixing damper control motor
6. Mode selection damper control motor
7. Mode lever
8. PTC heater <Diesel engine>
9. Outside/Inside air selection damper control motor
10. Heater core cover
11. Evaporator
12. Expansion valve

>>A<<
<Added>

Disassembly steps (Continued)

13. O-ring
14. Expansion valve cover <LHD>
15*. Heater core
16*. Upper case assembly
17. Fin thermo sensor
18. Air filter cover
19. Air filter
20. Power transistor
21. Blower motor
22. Air intake duct
23. Blower case upper
24. Outside/inside air selection damper
25. Blower case lower
26. Upper case

Disassembly steps (Continued)

27. Mode selection damper (FOOT)
28. Mode selection damper (DEF)
29. Air mixing damper
30. Wiring harness
31. Aspirator
32. Lower case

*NOTE: * For disassembly steps for the heater core and the upper case assembly on RHD, refer to the followings (note that they are different those on LHD).*

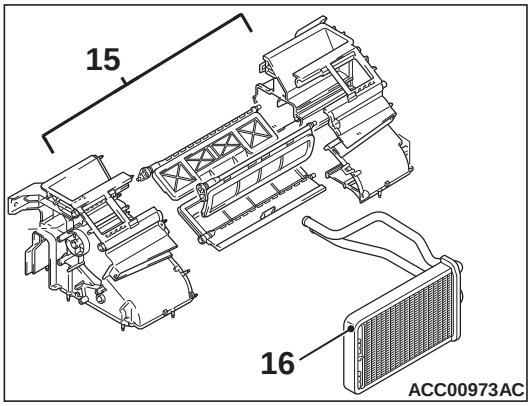

–	**Disassembly steps**
15.	Upper case assembly
16.	Heater core

REASSEMBLY SERVICE POINT

>>A<< FIN THERMO SENSOR INSTALLATION

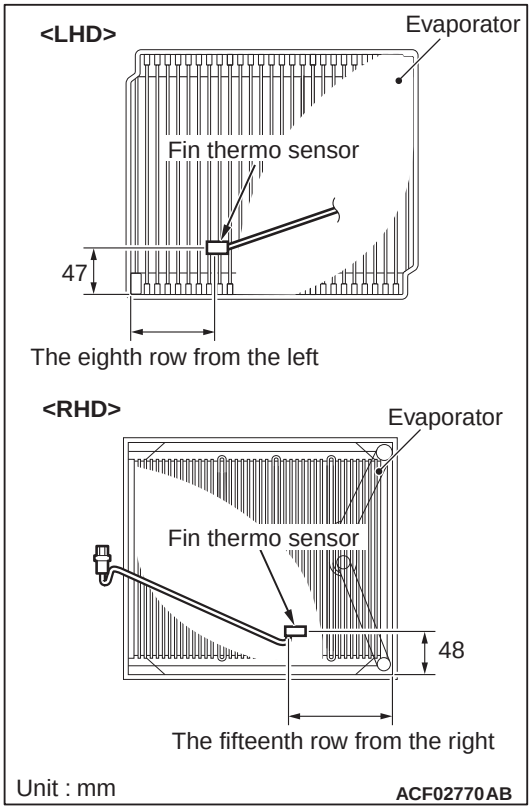

Install the fin thermo sensor at the position shown in the figure.

<Added>

LANCER/LANCER SPORTBACK (MMAL/NZ)
<Vehicles up to 2012 models>

DISASSEMBLY AND REASSEMBLY

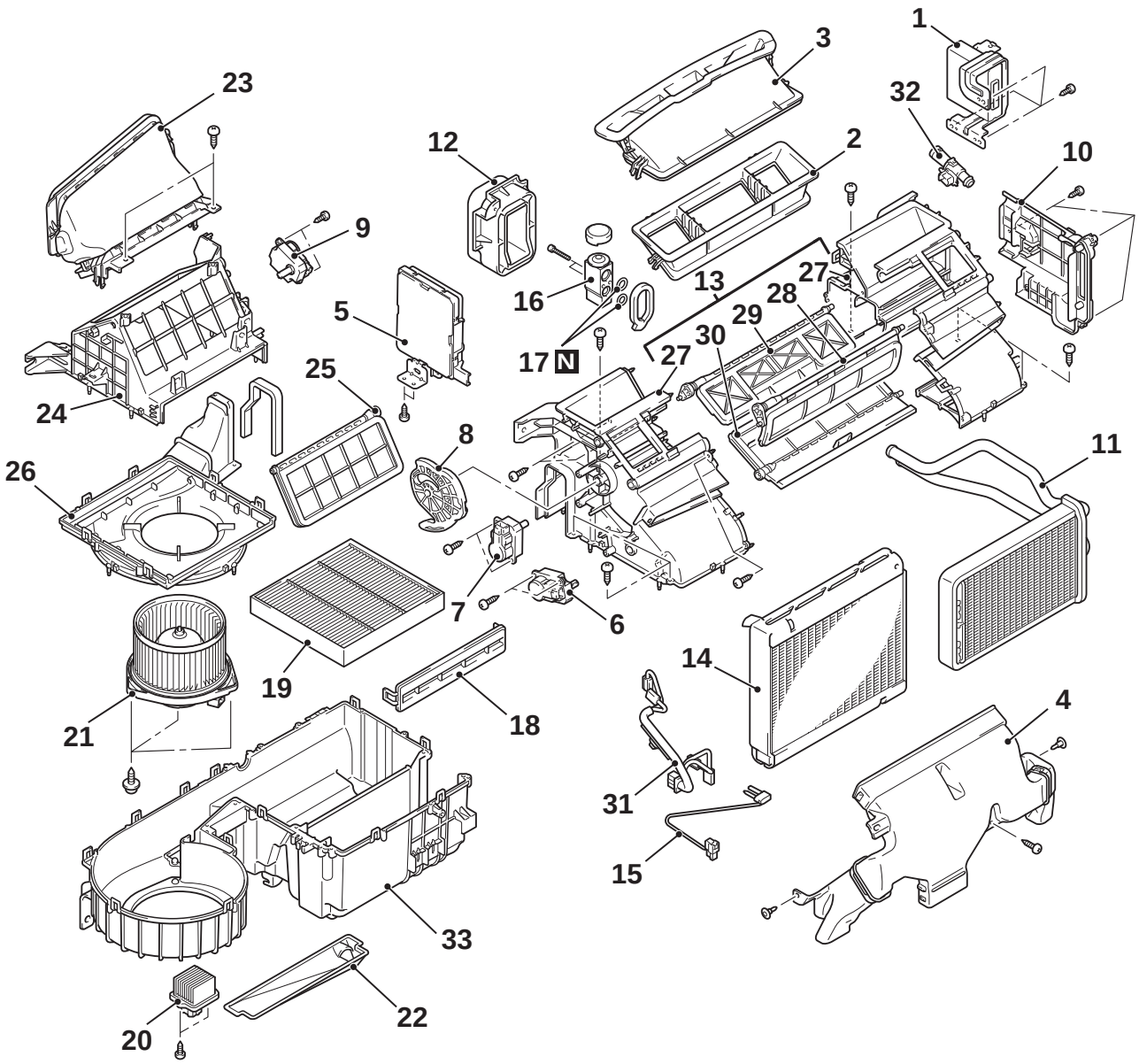

AC704334AB

Disassembly steps

1. KOS-ECU
2. Rear centre duct
3. Front centre duct
4. Foot duct
5. A/C-ECU
6. Air mixing damper control motor
7. Mode selection damper control motor
8. Mode lever
9. Outside/Inside air selection damper control motor
10. Heater core cover
11. Heater core
12. Expansion valve cover

>>A<<
<Added>

Disassembly steps (Continued)

13. Upper case assembly
14. Evaporator
15. Fin thermo sensor
16. Expansion valve
17. O-ring
18. Clean air filter cover
19. Clean air filter
20. Power transistor
21. Blower motor
22. Insulator
23. Air intake duct
24. Blower case upper
25. Outside/inside air selection damper
26. Blower case lower

Disassembly steps (Continued)

27. Upper case
28. Mode selection damper (FOOT)
29. Mode selection damper (DEF)
30. Air mixing damper
31. Wiring harness
32. Aspirator
33. Lower case

REASSEMBLY SERVICE POINT

>>A<< FIN THERMO SENSOR INSTALLATION

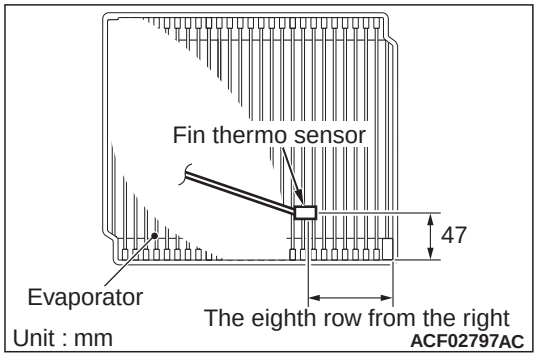

Install the fin thermo sensor at the position shown in the figure.

<Added>

DELICA D:5 (G.EXP)
<Vehicles up to 2011 models>

DISASSEMBLY AND ASSEMBLY

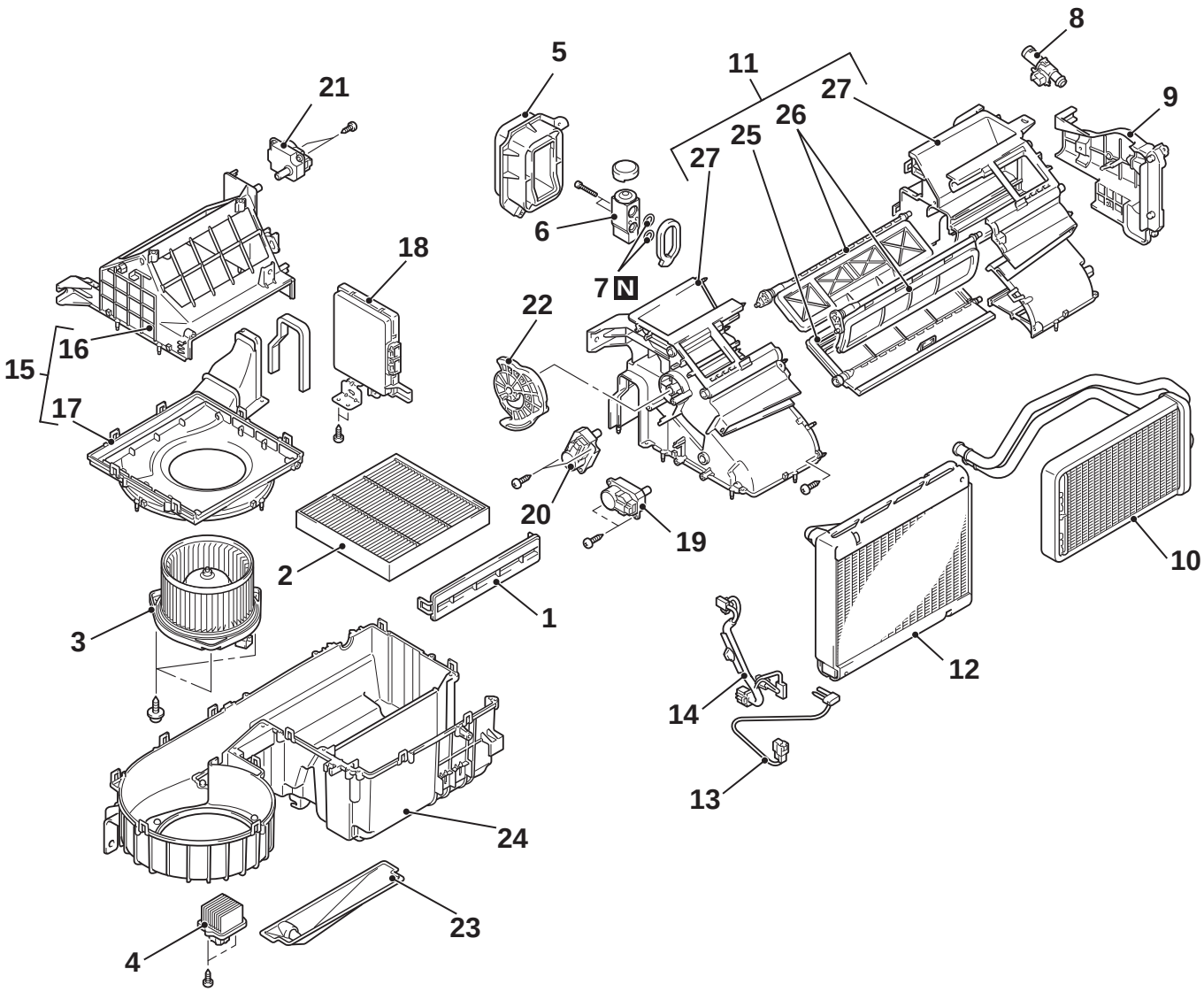

AC611030 AB

Disassembly steps

1. Clean air filter cover
2. Clean air filter
3. Blower motor
4. Power transistor
5. Expansion valve cover
6. Expansion valve
7. O-ring
8. Aspirator
9. Heater pipe cover
10. Heater core
11. Upper case assembly
12. Evaporator
13. Fin thermo sensor >>A<<
14. Wiring harness <Added>
15. Blower case assembly

Disassembly steps (Continued)

16. Blower case, upper
17. Blower case, lower
18. A/C-ECU
19. Air mix damper motor
20. Air outlet changeover damper motor
21. Outside/inside air selection damper motor
22. Air outlet changeover damper lever
23. Insulator
24. Lower case
25. Air mix damper
26. Air outlet changeover damper
27. Upper case

REASSEMBLY SERVICE POINT

>>A<< FIN THERMO SENSOR INSTALLATION

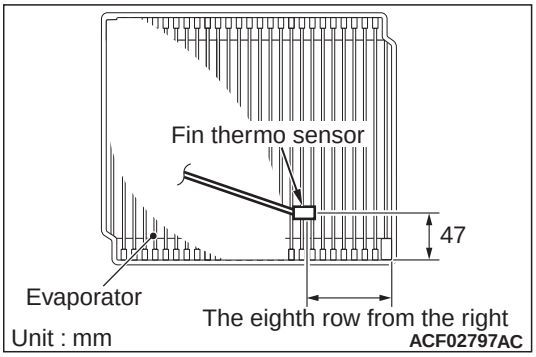

Install the fin thermo sensor at the position shown in the figure.

<Added>

LANCER/LANCER SPORTBACK (MMAL/NZ)
<Vehicles from 2013 models>
DELICA D:5 (G.EXP-Indonesia/Brunei/Thailand)
<Vehicles for 2015 models>

HEATER UNIT AND BLOWER ASSEMBLY

DISASSEMBLY AND REASSEMBLY

M1552020900973

<New>

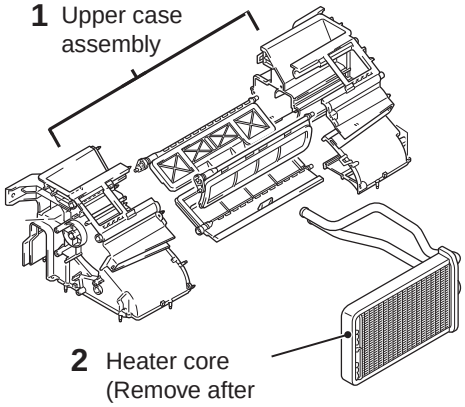

<Old>

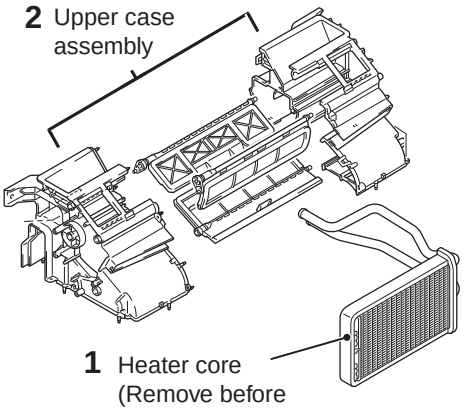

ACC02798 AB

The following items have been changed.

- The conventional A/C-ECU has been discontinued as an A/C-ECU is incorporated in the A/C control panel.
- How to remove the heater core has been changed as shown due to the redesigned upper case assembly.
- The expansion valve cover has been discontinued.
- The fin thermo sensor has been relocated as shown.

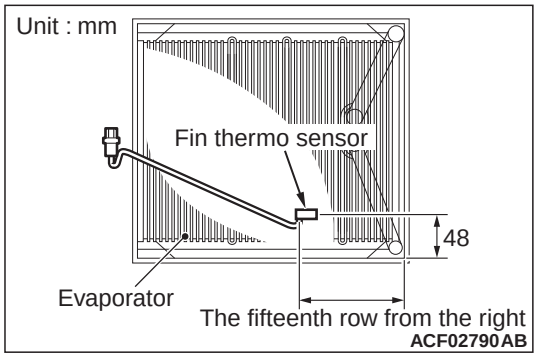

<Added>

DISASSEMBLY AND REASSEMBLY

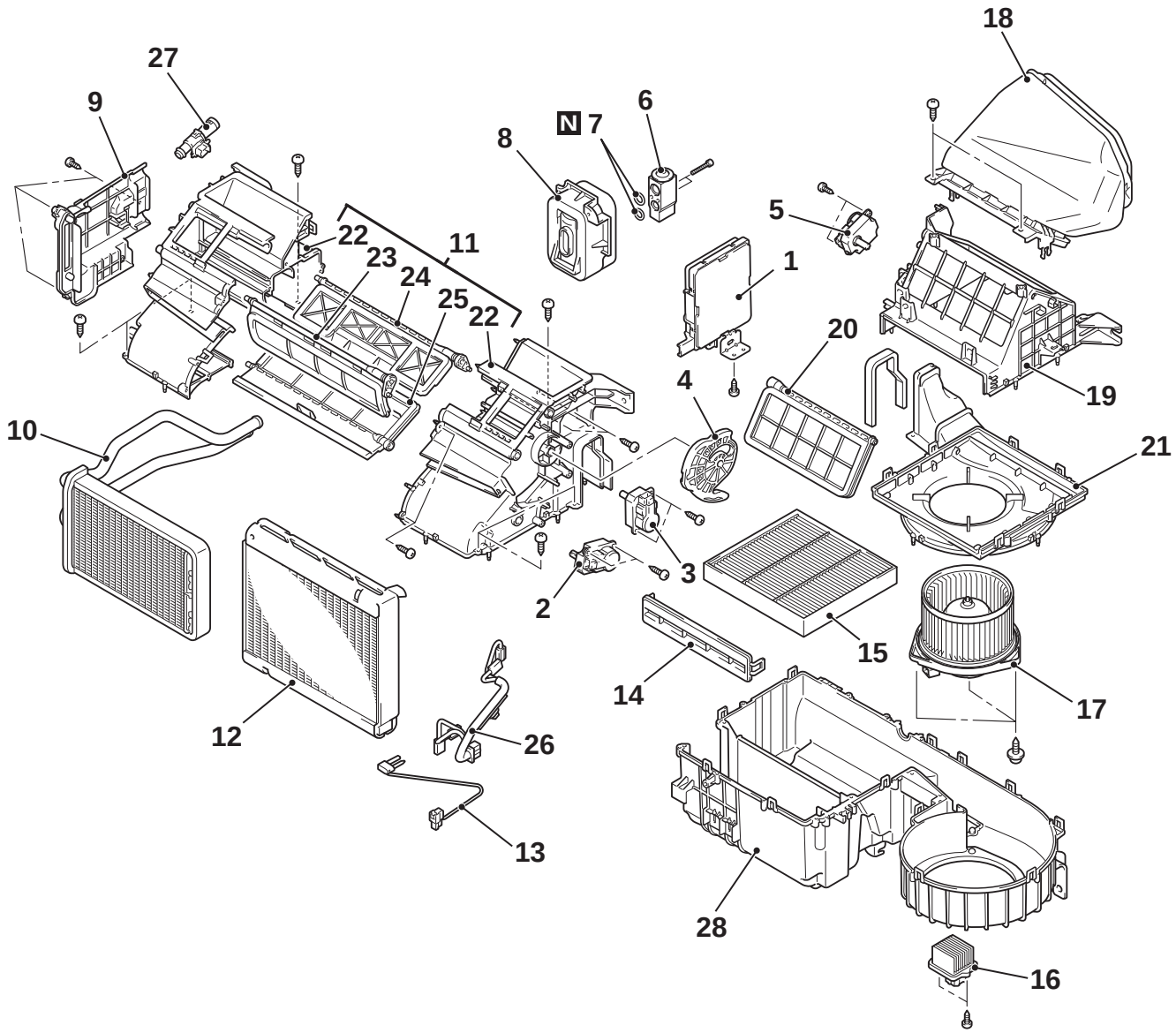

AC905281AE

Disassembly steps

1. A/C-ECU
2. Air mixing damper control motor
3. Mode selection damper control motor
4. Mode lever
5. Outside/Inside air selection damper control motor
6. Expansion valve
7. O-ring
8. Expansion valve cover
9. Heater core cover
10. Heater core
11. Upper case assembly
12. Evaporator

Disassembly steps (Continued)

>>A<<
<Added>

13. Fin thermo sensor
14. Clean air filter cover
15. Clean air filter
16. Power transistor
17. Blower motor
18. Air intake duct
19. Blower case upper
20. Outside/inside air selection damper
21. Blower case lower
22. Upper case
23. Mode selection damper (FOOT)
24. Mode selection damper (DEF)
25. Air mixing damper
26. Wiring harness

Disassembly steps (Continued)

27. Aspirator
28. Lower case

REASSEMBLY SERVICE POINT

>>A<< FIN THERMO SENSOR INSTALLATION

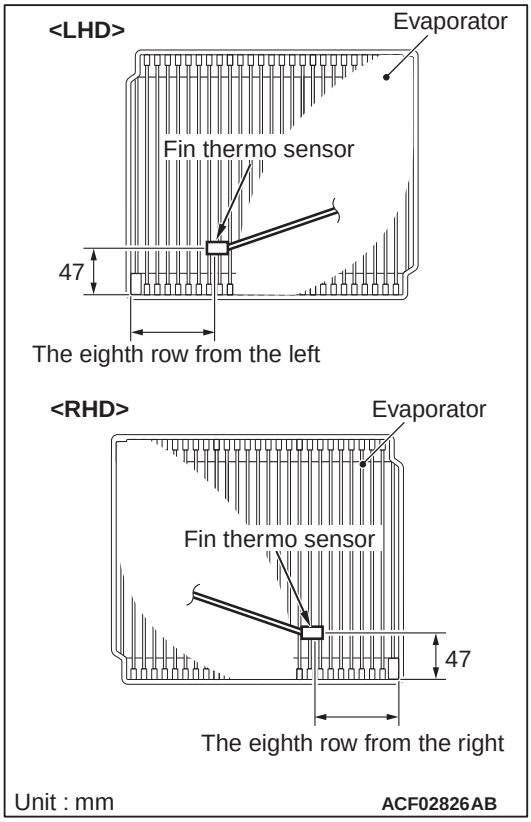

Install the fin thermo sensor at the position shown in the figure.

<Added>

HEATER UNIT AND BLOWER ASSEMBLY

DISASSEMBLY AND REASSEMBLY

M1552020900887

<New>

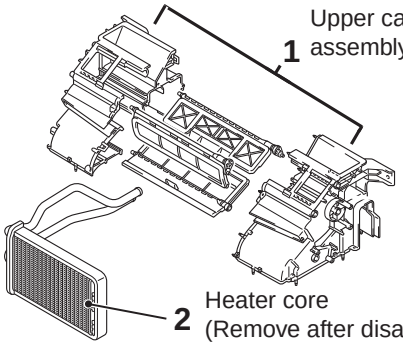

<Old>

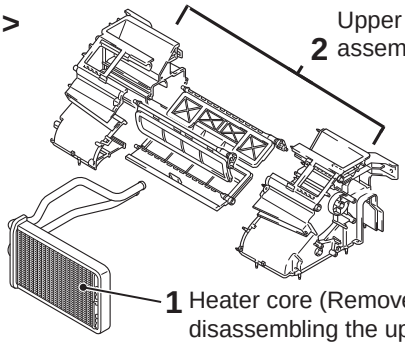

ACC01540AB

The following items have been changed.

- The conventional A/C-ECU has been discontinued as an A/C-ECU is incorporated in the A/C control panel.
- How to remove the heater core has been changed as shown due to the redesigned upper case assembly.
- The expansion valve cover has been discontinued.
- The fin thermo sensor has been relocated as shown.

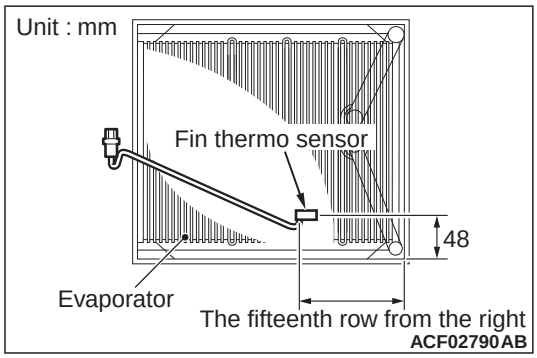

ACF02790AB

<Added>

Attached sheet 15

GENERAL INFORMATION

OUTLINE OF CHANGE

Now the A/C control panel is common to RHD and LHD (The panel designed exclusively for RHD has been discontinued).

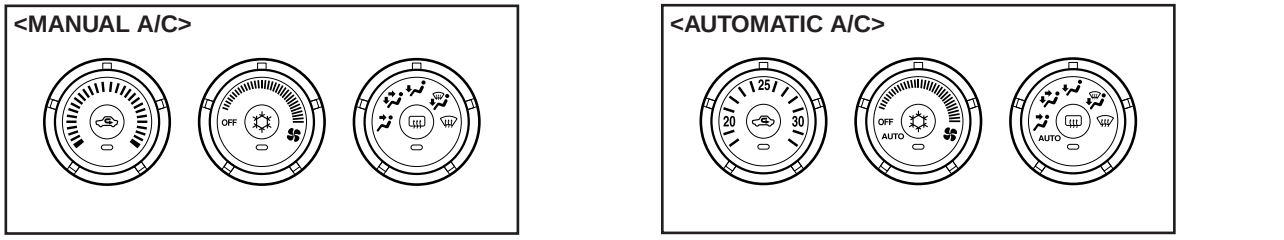

ACD02533AB

HEATER UNIT AND BLOWER ASSEMBLY <VEHICLES PRODUCED IN MMNA (VEHICLES FROM DEC. 2013)>

DISASSEMBLY AND REASSEMBLY

The fin thermo sensor has been relocated as shown.

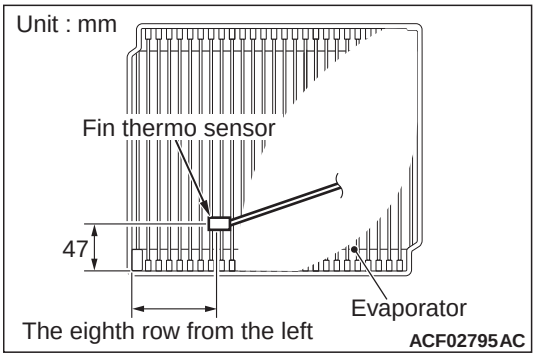

ACF02795AC

<Added>

LANCER/LANCER SPORTBACK

DISASSEMBLY AND REASSEMBLY
<VEHICLES UP TO 2012 MODELS>

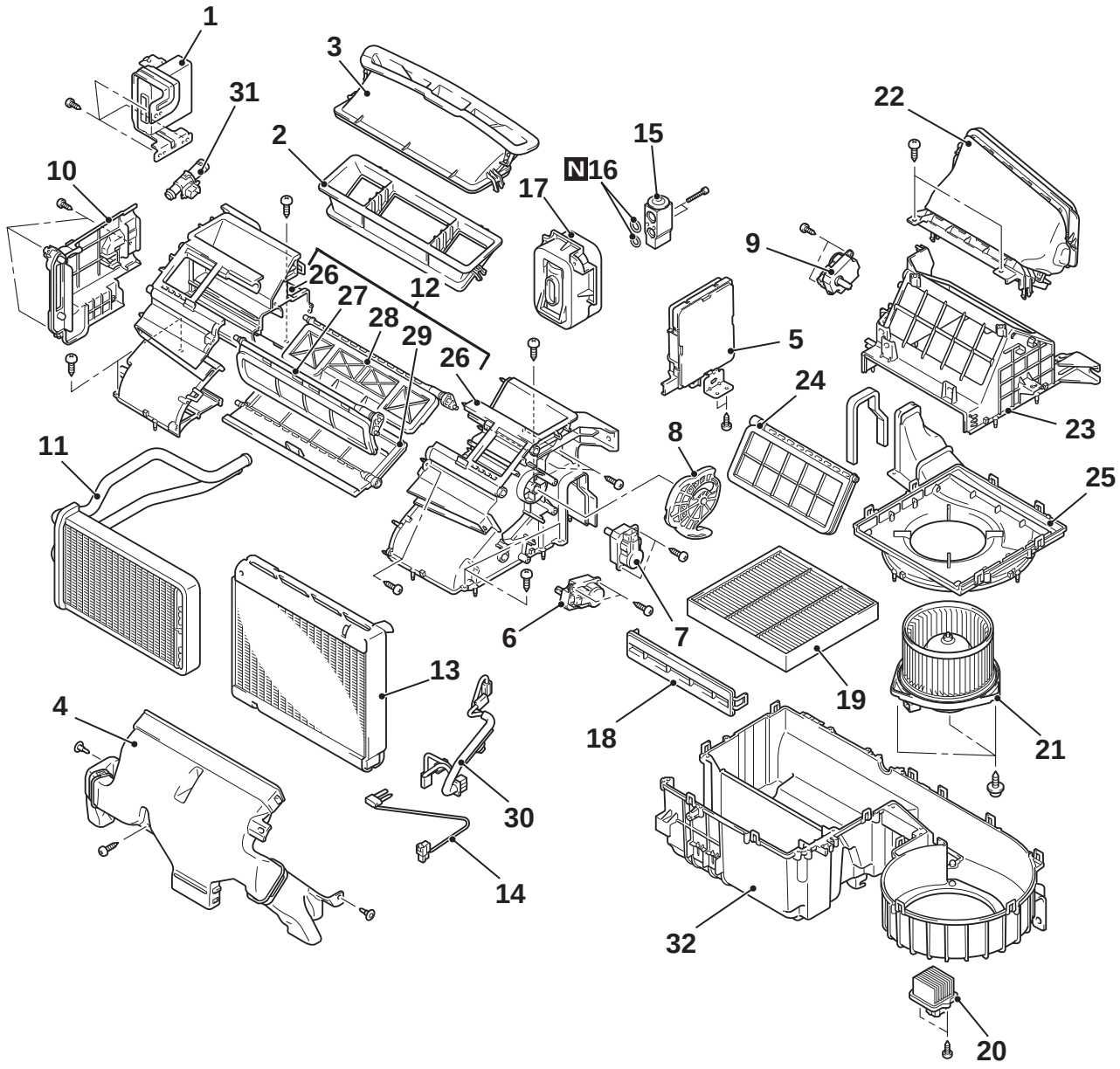

ACA00002 AB

Disassembly steps

1. KOS-ECU
2. Rear center duct
3. Front center duct
4. Foot duct
5. A/C-ECU
6. Air mixing damper control motor
7. Mode selection damper control motor
8. Mode lever
9. Outside/Inside air selection damper control motor
10. Heater core cover

Disassembly steps (Continued)

11. Heater core
12. Upper case assembly
13. Evaporator

>>A<<
<Added>

14. Fin thermo sensor
15. Expansion valve
16. O-ring
17. Expansion valve cover
18. Clean air filter cover
19. Clean air filter
20. Power transistor
21. Blower motor
22. Air intake duct
23 Blower case upper

Disassembly steps (Continued)

24. Outside/inside air selection damper
25. Blower case lower
26. Upper case
27. Mode selection damper (FOOT)
28. Mode selection damper (DEF)
29. Air mixing damper

Disassembly steps (Continued)

30. Wiring harness
31 Aspirator
32. Lower case

<VEHICLES FROM 2013 MODELS>

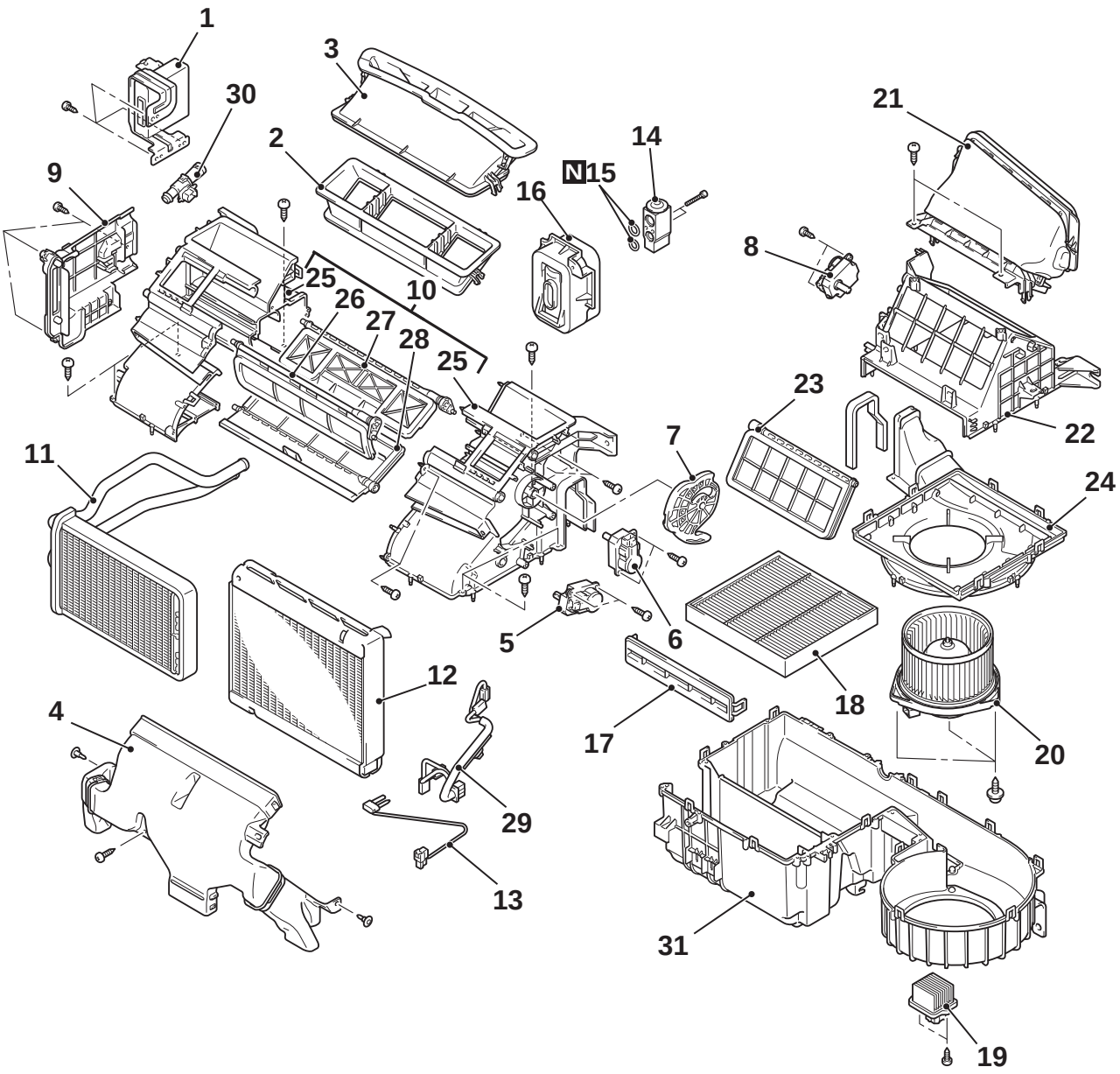

ACC01884 AC

Disassembly steps

1. KOS-ECU
2. Rear center duct
3. Front center duct
4. Foot duct
5. Air mixing damper control motor
6. Mode selection damper control motor
7. Mode lever

<<A>>

>>A<<

<Added>

Disassembly steps (Continued)

8. Outside/Inside air selection damper control motor
9. Heater core cover
10. Upper case assembly
11. Heater core
12. Evaporator
13. Fin thermo sensor
14. Expansion valve

Disassembly steps (Continued)

15. O-ring
16. Expansion valve cover
17. Clean air filter cover
18. Clean air filter
19. Power transistor
20. Blower motor
21. Air intake duct
22. Blower case upper
23 Outside/inside air selection damper
24. Blower case lower
25. Upper case
26. Mode selection damper (FOOT)
27. Mode selection damper (DEF)
28. Air mixing damper
29. Wiring harness
30 Aspirator
31. Lower case

DISASSEMBLY SERVICE POINT <VEHICLES FROM 2013 MODELS>

<<A>> HEATER CORE REMOVAL

The heater core should be removed after the upper case assembly is disassembled.

REASSEMBLY SERVICE POINT

>>A<< FIN THERMO SENSOR INSTALLATION

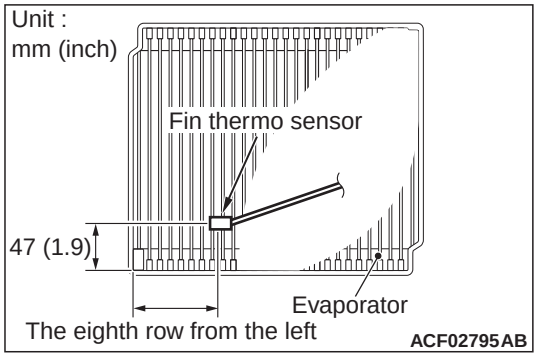

Install the fin thermo sensor at the position shown in the figure.

<Added>

OUTLANDER SPORT/ASX/RVR

DISASSEMBLY AND ASSEMBLY
<VEHICLES UP TO 2012 MODELS>

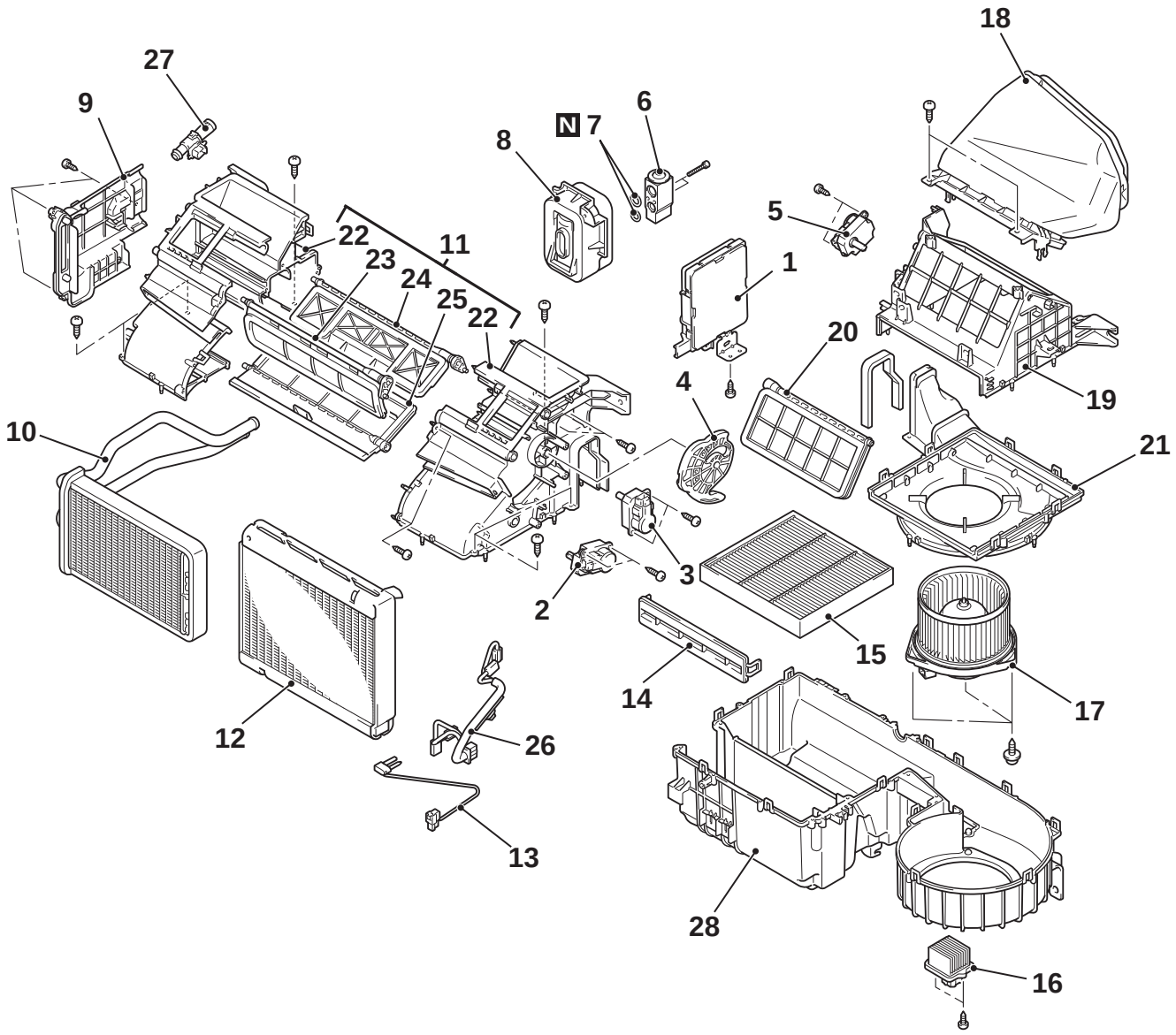

ACA02797AC

Disassembly steps

1. A/C-ECU
2. Air mixing damper control motor
3. Mode selection damper control motor
4. Mode lever
5. Outside/Inside air selection damper control motor
6. Expansion valve
7. O-ring
8. Expansion valve cover
9. Heater core cover
10. Heater core

Disassembly steps (Continued)

>>A<<
<Added>

11. Upper case assembly
12. Evaporator
13. Fin thermo sensor
14. Clean air filter cover
15. Clean air filter
16. Power transistor
17. Blower motor
18. Air intake duct
19. Blower case upper
20. Outside/inside air selection damper
21. Blower case lower
22. Upper case
23. Mode selection damper (FOOT)

Disassembly steps (Continued)

24 Mode selection damper (DEF)
25. Air mixing damper
26. Wiring harness

Disassembly steps (Continued)

27. Aspirator
28. Lower case

<VEHICLES FROM 2013 MODELS>

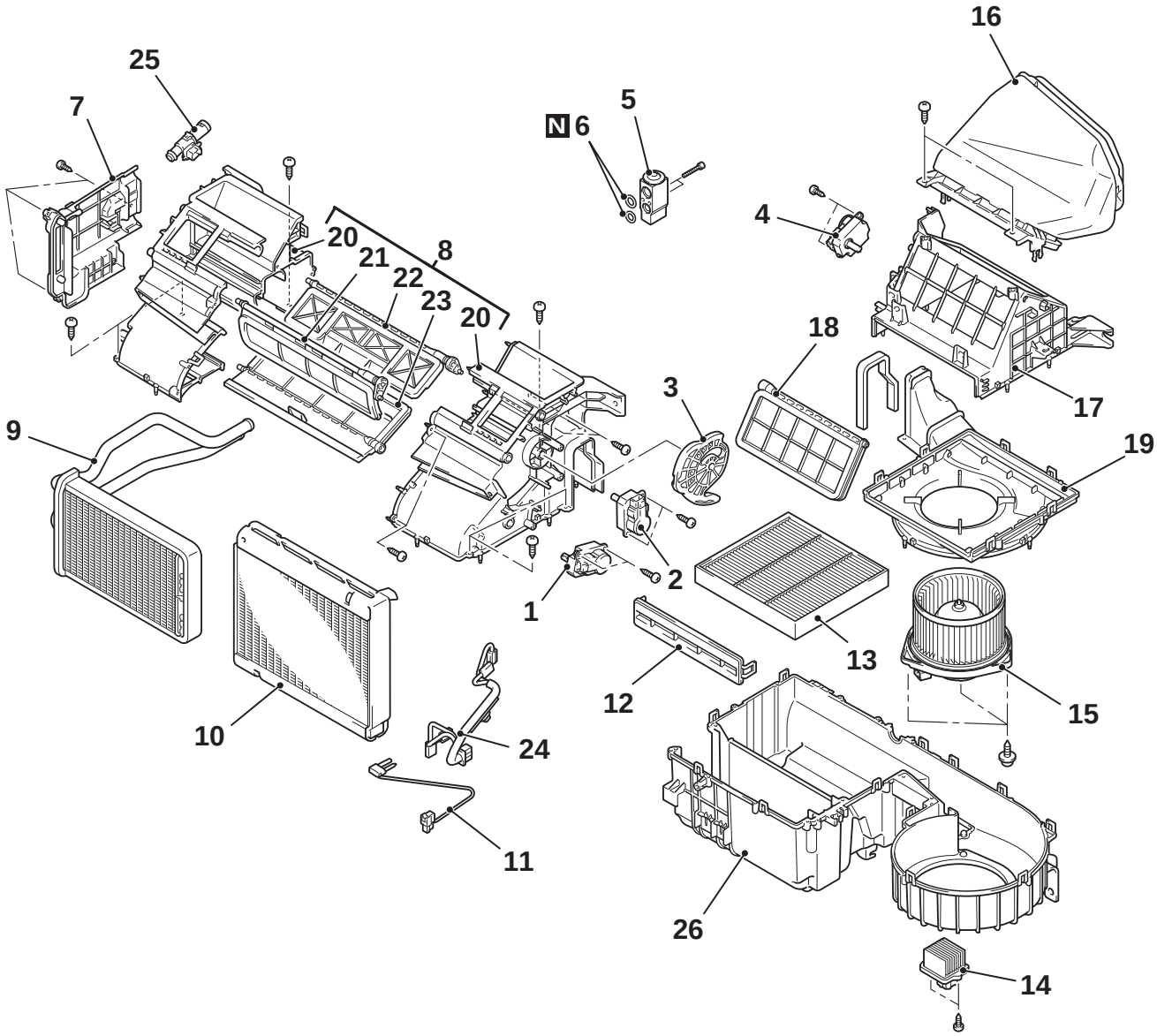

ACC02733AC

Disassembly steps

1. Air mixing damper control motor
2. Mode selection damper control motor
3. Mode lever
4. Outside/Inside air selection damper control motor
5. Expansion valve
6. O-ring
7. Heater core cover
8. Upper case assembly

<<A>>

>>A<<

<Added>

Disassembly steps (Continued)

9. Heater core
10. Evaporator
11. Fin thermo sensor
12. Clean air filter cover
13. Clean air filter
14. Power transistor
15. Blower motor
16. Air intake duct
17. Blower case upper
18. Outside/inside air selection damper

Disassembly steps (Continued)

19. Blower case lower
20. Upper case
21. Mode selection damper (FOOT)
22. Mode selection damper (DEF)
23. Air mixing damper
24. Wiring harness
25. Aspirator
26. Lower case

DISASSEMBLY SERVICE POINT <VEHICLES FROM 2013 MODELS>

<<A>> HEATER CORE REMOVAL

The heater core should be removed after the upper case assembly is disassembled.

REASSEMBLY SERVICE POINT

>>A<< FIN THERMO SENSOR INSTALLATION

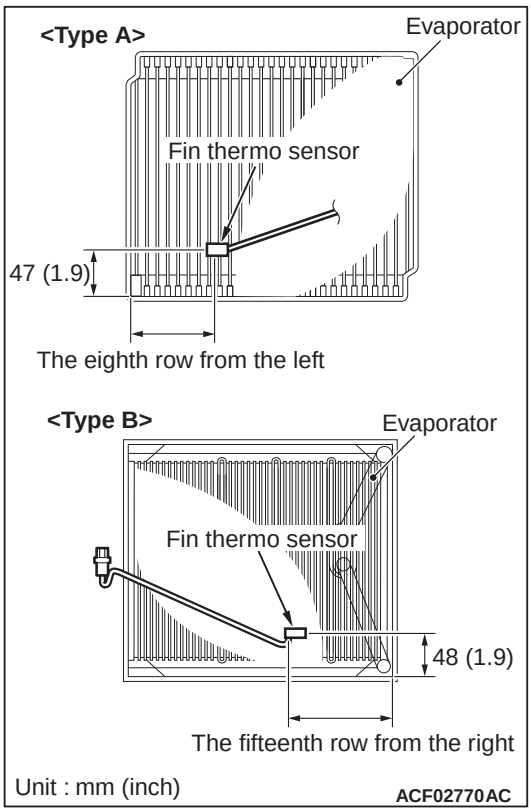

Install the fin thermo sensor at the position shown in the figure.

NOTE: Where the fin thermo sensor should be installed depends on when the vehicle has been produced.

Production date		Installation position
Vehicles up to 2012 models		Type A
2013 models		Type B
2014 models	Vehicles up to Nov. 2013	Type B
	Vehicles from Dec. 2013	Type A
2015 models		Type A

<Added>

RVR

HEATER UNIT AND BLOWER ASSEMBLY

DISASSEMBLY AND REASSEMBLY

M1552020901006

<New>

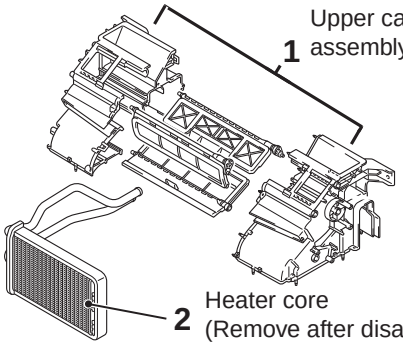

<Old>

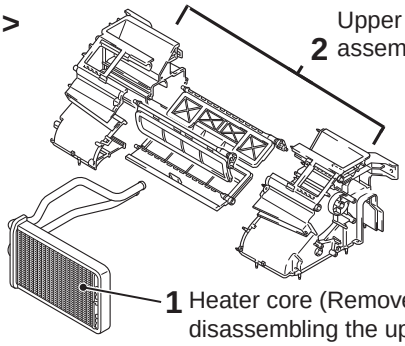

ACC01540AB

The following items have been changed.

- The conventional A/C-ECU has been discontinued as an A/C-ECU is incorporated in the A/C control panel.
- How to remove the heater core has been changed as shown due to the redesigned upper case assembly.
- The fin thermo sensor has been relocated as shown.

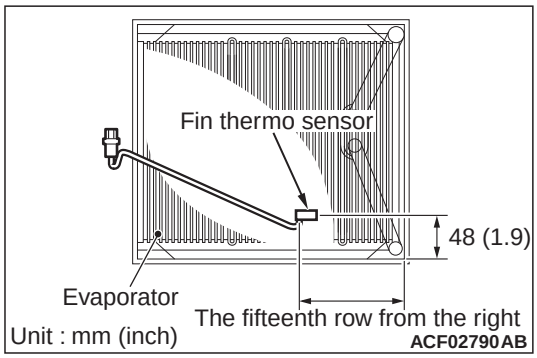

ACF02790AB

<Added>