Welcome aboard your vehicle
hybrid vehicle

The system description provided in this manual is based on the technical specifications known at the time of writing. **The manual covers all items of equipment** (both standard and optional) **available, but whether or not these are fitted to the vehicle depends on the version, the options selected and the country where the vehicle is sold.**
This handbook may also contain information about items of equipment to be introduced later in the model year.
The diagrams in the user manual are provided as examples.

The information contained in this document **supersedes** and/or **replaces** the main driver's handbook.
Translated from French. Copying or translation, in part or in full, is forbidden unless prior written permission has been obtained from the car manufacturer.

Contents

Hybrid vehicle system: introduction GB.4
Hybrid vehicle system: operation. GB.8
Important recommendations GB.11
Warning lights GB.12
Displays and indicators GB.14
Trip computer: operating fault messages GB.17
Trip computer: warning messages GB.18
Headlight beam adjustment. GB.19
Fuel tank GB.20
Starting, stopping the hybrid system: vehicle with card. GB.21
Driving advice, Eco-driving GB.24
Automatic gearbox. GB.25
Air conditioning: information and advice on use GB.28
Engine oil level: general information GB.29
Engine oil level: topping-up, filling, change GB.30
Levels, filters GB.32
Secondary “12 V” battery. GB.36
Puncture, emergency spare wheel GB.38
Tyre inflation kit GB.41
Rear lights and side lights: changing bulbs GB.44
Secondary “12 V” battery: breakdown recovery GB.47
Towing, breakdown GB.50
Engine identification GB.52
Engine specifications. GB.53

HYBRID VEHICLE SYSTEM: introduction (1/4)

1 Secondary “12 V” battery
2 “230 volt” traction battery
3 Orange electrical power cables
4 Electric motor
5 Combustion engine

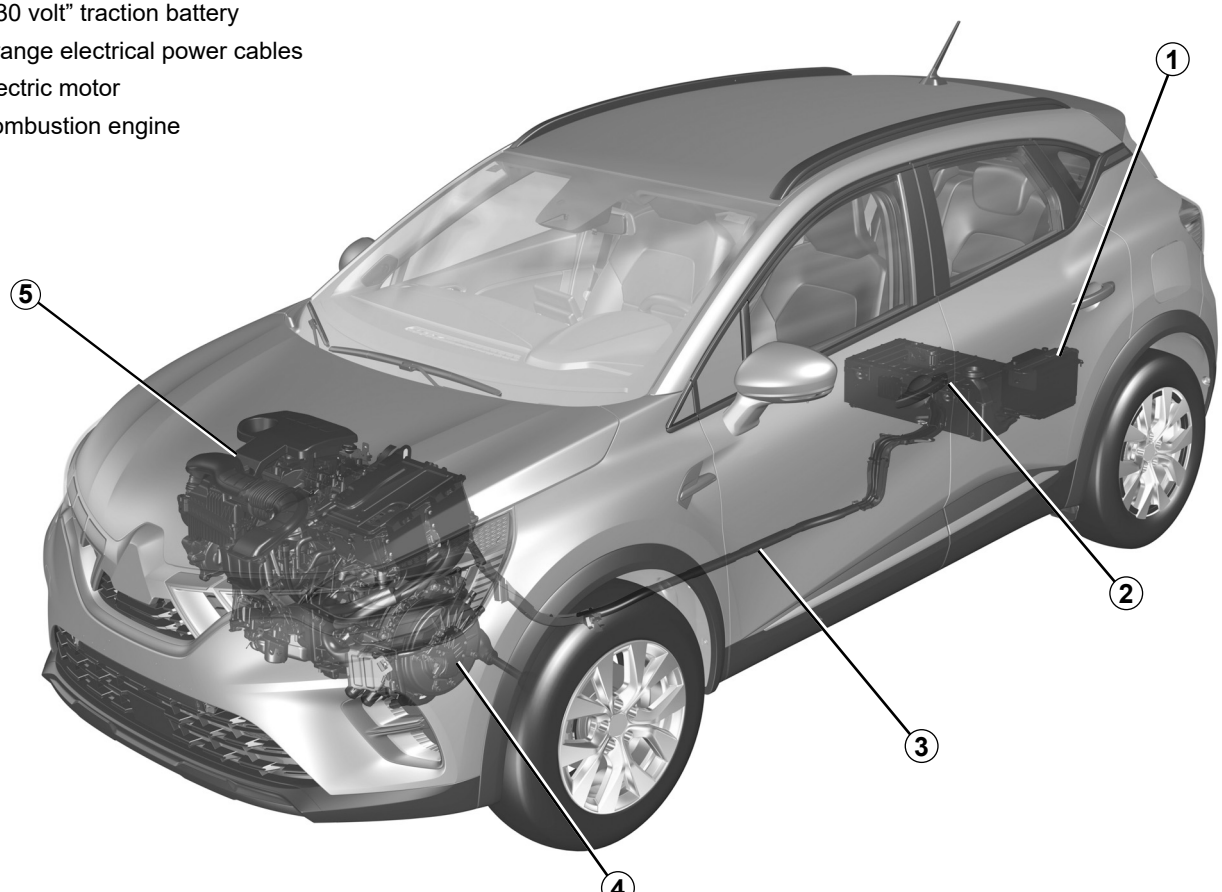

59085

HVSE23E2

HYBRID VEHICLE SYSTEM: introduction (2/4)

The hybrid vehicle system uses an electric motor to improve the performance of the combustion engine (acceleration, starting etc.).

The vehicle has more acceleration torque available while consuming less fuel.

The vehicle may also move in all-electric operating mode without any assistance from the combustion engine. The vehicle uses energy stored in the “230 V” traction battery.

Batteries

The hybrid vehicle is equipped with two types of battery:

– a 230 V traction battery;

– a secondary “12 V” battery.

“230 volt” traction battery

This battery, located underneath the rear floor, stores the energy required for the electric motor to operate correctly.

As with any battery, it discharges when it is used. The traction battery is charged:

– during the vehicle deceleration phases;

– when the combustion engine starts automatically in order to act as a generator.

Your vehicle range in electric operating mode depends on the charge level of the traction battery, and also on your driving style and the components consuming energy (air conditioning, heating system etc.).

In the event of traction battery discharge, the combustion engine alone moves the vehicle until the traction battery is sufficiently recharged.

Secondary “12 V” battery

The secondary “12 V” battery, located in the luggage compartment, supplies the energy required to open/close the vehicle and to operate the equipment.

Note: the secondary battery “12 Volts” does not participate when the engine is started. This is ensured by the hybrid system.

The electrical system of the hybrid vehicle uses direct voltage of approximately 230 V.

This system can get hot during and after switching off the ignition. Respect warning messages given on the labels in the vehicle.

All operations on or modifications to the “230 V” electrical system (components, cables, connectors, traction battery) are strictly prohibited due to the risks they present to your safety. Call an approved Dealer.

The risk of serious burns or electric shocks can lead to death.

HYBRID VEHICLE SYSTEM: introduction (3/4)

Ⓐ

33436

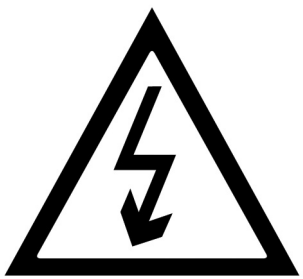

The ***A*** symbol denotes the electrical elements of your vehicle which may present health risks.

59078

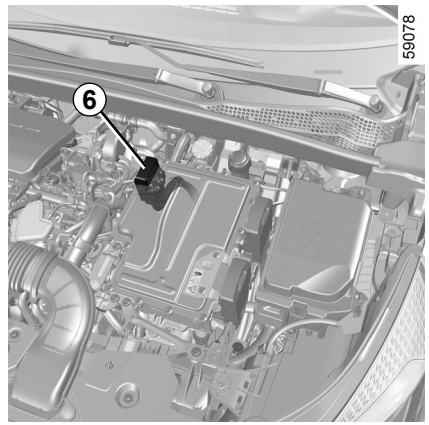

“230 volt” electrical circuit

The 230 V electrical circuit is denoted by orange cables ***6*** and parts bearing the ⚠ symbol.

HYBRID VEHICLE SYSTEM: introduction (4/4)

Noise

The hybrid vehicles are particularly quiet in electric operating mode.

You will not yet necessarily be used to it, and neither will other road users. It is difficult for them to hear your vehicle when it is moving.

As the electric motor is silent, you will hear other noises that may seem unusual (aerodynamic noises, tyres, etc.) as well as noises due to the operation of the hybrid system (e.g. cooling of the traction battery).

Your hybrid vehicle is very quiet. When getting out of the vehicle, always check that the gear selector is in **P** position, apply the parking brake and switch off the ignition.

RISK OF SERIOUS INJURY.

Pedestrian horn

The pedestrian horn enables you to warn others of your presence – especially pedestrians and cyclists.

In electric operating mode, the system is activated automatically.

The sound is triggered when the vehicle speed is between about 1 and 19 mph (1 and 30 km/h).

For further information on the pedestrian horn, refer to the multimedia instructions.

In the event of a fault with the pedestrian horn, the warning light  is displayed on the instrument panel, together with the message “Failure Outside sound”.

Consult an approved dealer.

HYBRID VEHICLE SYSTEM: operation (1/3)

The hybrid system selects the combustion engine and/or the electric motor according to the driving style (smooth, sporty etc.), the traffic conditions and driving mode selected (refer to the information on “MULTI-SENSE” in Section 3 of the vehicle user manual).

Bad weather, flooded roads:



Do not drive through floods if the depth of water is above the lower edge of the wheel rims.

49430



Energy flow indicator *1*

Depending on the driving mode selected, the ***1*** indicator represents the energy flows between:

– the electrical assembly (traction battery and electric motor);

– the combustion engine;

– the wheels.

49463

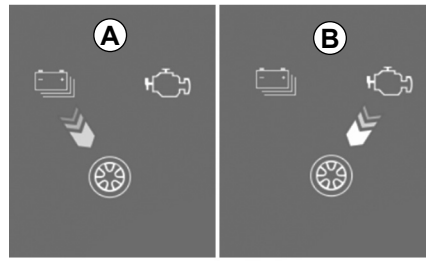

The colour of the flows varies:

– blue: electrical energy;

– white: energy produced by the combustion engine.

Flow *A* “Electric traction”

The electrical assembly is used to power movement of the vehicle.

Flow *B* “Combustion engine traction”

The combustion engine is used to power movement of the vehicle.

HYBRID VEHICLE SYSTEM: operation (2/3)

49497

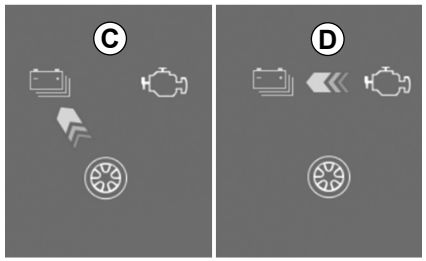

Flow *C* "Energy recovery"

When you lift your foot off the accelerator pedal or press the brake pedal, the electric motor and/or regenerative braking system converts the energy produced through deceleration of the vehicle into electrical energy.

This is used to slow down the vehicle and recharge the traction battery.

Flow *D* "Energy production"

The combustion engine recharges the traction battery.

Note: a combination of different flows is possible (e.g. associating the ***A*** flow with the ***B*** flow means that both the combustion engine and electric motor are powering movement of the vehicle).

Special case

When the traction battery reaches a maximum charge level, the engine brake is temporarily reduced.

Please adapt your driving style appropriately.

The engine brake should under no circumstances be used as a substitute for the brake pedal.

HVSE23E2

HYBRID VEHICLE SYSTEM: operation (3/3)



All-electric driving mode

The ***2*** **EV** warning light is displayed on the instrument panel to inform you that the hybrid system is using only the electrical assembly to power the vehicle movement.

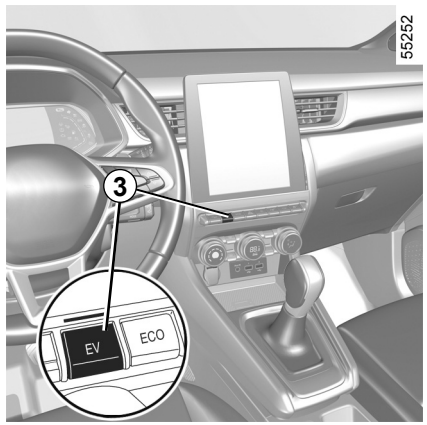

When the hybrid system is using the combustion engine with or without the electric motor to power the vehicle movement, it is possible to manually switch to all-electric mode.

This mode can be accessed if:

– the traction battery is sufficiently charged;

– the vehicle speed is below approximately 30 mph (50 km/h).

Press the switch ***3***.

The warning light on switch ***3*** is on and the ***2*** **EV** warning light is displayed on the instrument panel.

Otherwise, the message “ EV unavailable “ is displayed on the instrument panel.

Press again on the ***3*** switch to deactivate all-electric mode.

The ***3*** switch warning light goes out.

The ***2*** **EV** warning light is no longer displayed on the instrument panel when the vehicle switches to hybrid mode and the combustion engine starts.

Note: when the traction battery level is low, the vehicle automatically switches to hybrid mode and the combustion engine starts: the ***2*** **EV** warning light disappears from the instrument panel and the warning light on switch ***3*** goes out to confirm this.

IMPORTANT RECOMMENDATIONS

Please read these instructions carefully. Failure to follow these instructions may lead to a **risk of fire, serious injury or electric shock which may present a risk to life.**

In the event of an accident or impact

In the event of an accident or an impact to the underside of the vehicle (e.g. striking a post, raised kerb or other street furniture) the electric circuit or the traction battery may be damaged.
Have the vehicle checked by an authorised dealer.
Never touch the “230 volt” components or orange cables which are exposed and visible inside or outside the vehicle.

In the event of serious damage to the traction battery, leaks may occur:

– never touch the liquids (fluids, etc.) coming from the traction battery;
– in the event of contact with the body, wash the affected area with plenty of water and consult a doctor as soon as possible.

In the event of fire

In the event of a fire, leave the vehicle immediately and evacuate it, then contact the emergency services, informing them that this is a hybrid vehicle.
Only use extinguishing agents ABC or BC that are permitted for use with electrical fires. Do not use water or other extinguishing agents.
In the event of damage to the electrical circuit, please call an authorised dealer.

All towing operations

Refer to the paragraph entitled “Towing, breakdown recovery” ➥ GB.50.

Washing the vehicle

Never wash the engine compartment and “230 V” traction battery using a high-pressure jet.
This risks damaging the electric circuit.

Risk of electric shock and a risk to life.

WARNING LIGHTS (1/2)

The presence and operation of the warning lights DEPEND ON THE EQUIPMENT AND COUNTRY.

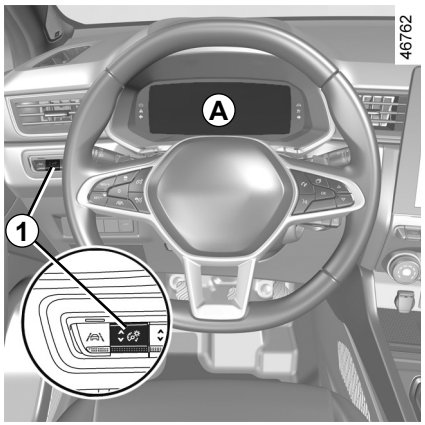

Instrument panel *A*: lights up when the driver's door is opened.

Press or lift the ***1*** switch as many times as required to adjust the intensity.

Warning light means you should drive **very carefully to an authorised dealer as soon as possible**.

Failing to follow this recommendation may result in damage to your vehicle.

Electrotechnical system warning light

It appears when the temperature of the electrical assembly is too high. Stop the vehicle without switching off the ignition. The temperature should lower and the warning light should disappear. If this is not the case, please consult an Authorised Dealer.

The warning light can be accompanied by a drop in vehicle performance.

Secondary 12 V battery charge warning light

If it comes on, accompanied by the STOP warning light and a beep, this means that the electrical circuit is overcharged or discharged ➥ GB.47.

Traction battery fault warning light

If it appears, accompanied by the warning light, this indicates a fault related to the operation of the traction battery. Contact your approved Dealer straight away.

Traction battery gauge indicator light

This appears in yellow when the traction battery charge level has reached the reserve threshold ➥ GB.14.

For your own safety, the STOP warning light requires you to stop immediately, as soon as traffic conditions allow.

Switch off the engine and do not restart it.

Call an approved Dealer.

WARNING LIGHTS (2/2)

The presence and operation of the warning lights DEPEND ON THE EQUIPMENT AND COUNTRY.

Electric operating mode warning light

It is displayed when only the electric motor and traction battery are powering the movement of the vehicle ➥ GB.8.

Electrotechnical system fault warning light

When it comes on, this indicates an electrotechnical fault related to the electrical assembly (traction battery and electric motor). Contact your approved Dealer straight away.

Electric motor fault warning light

When it comes on, this indicates a fault with the electrotechnical system linked to the electric motor. Contact your approved Dealer straight away.

Pedestrian horn fault warning light

If no lights or sounds are apparent, this indicates a fault in the instrument panel.

This indicates that it is essential to stop immediately (as soon as traffic conditions allow).

Ensure that the vehicle is correctly immobilised and contact an approved Dealer.

HVSE23E2

DISPLAYS AND INDICATORS (1/3)



Instrument panel *A*

lights up when the driver's door is opened. In some cases, the appearance of a warning light is accompanied by a message.

"230 V" traction battery level remaining *1*

Traction battery level low

In the event of extreme use at low speed, the traction battery charge may drop to a low level.

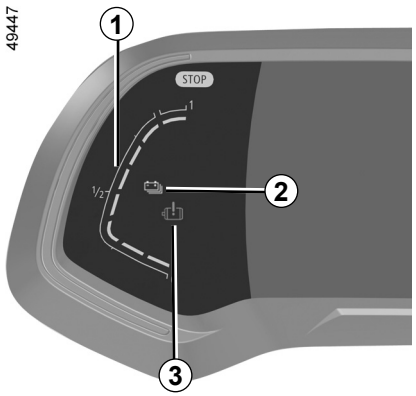

The ***2*** warning light appears in yellow to notify you. The electric motor performance will be limited to ensure that the hybrid system operates correctly, until the battery charge level becomes sufficient.

Opt for a smoother driving style or, if possible, stop without switching off the ignition again until the ***2*** warning light changes back to blue.

Immobilisation threshold imminent

In the event of extreme and prolonged use of the vehicle (e.g. towing or driving in steep off-road conditions) at speeds below 6 mph (10 km/h), the charge level may reach the threshold for imminent immobilisation. A beep sounds and the warning light ***3*** appears in red.

If the charge level continues to drop, the electric range value will no longer be displayed.

If possible, stop the vehicle when traffic conditions allow it. Leave the combustion engine on until the warning lights disappear. This must be done to recharge the traction battery.

DISPLAYS AND INDICATORS (2/3)

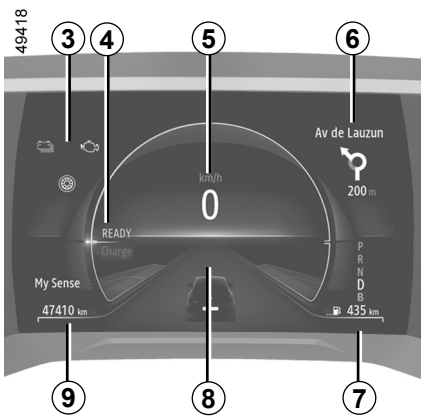

Energy flow indicator *3* ➥ GB.8

Message indicating vehicle ready for driving *4*
The message READY appears when the ignition is switched-on and disappears when the vehicle speed exceeds 3 mph (5 km/h).

Speedometer *5*

Multimedia information *6*
Depending on the vehicle, you can display information from the multimedia screen (the compass, telephone, navigation etc.).
Please refer to the multimedia instructions for further information.

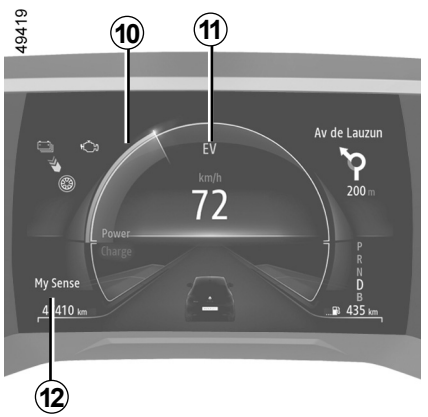

Estimated mileage with remaining fuel *7*

Trip computer *8*

Total mileage recorder *9*

Charge meter *10* ➥ GB.24

Electric operating mode warning light *11*
It is displayed when only the traction battery is powering movement of the vehicle.

Driving mode selected *12*

For more information, please refer to "MULTI-SENSE" in Section 3 of the vehicle user manual.

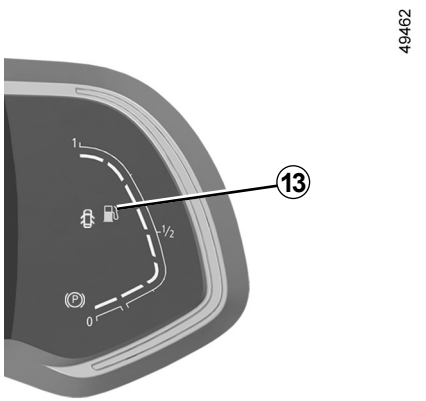

Fuel gauge *13*

If the level is at the minimum, warning light integrated in the indicator comes on orange, accompanied by a beep. Whatever the remaining battery level, fill the tank as soon as possible. If the vehicle runs completely out of fuel, fill the tank with at least 1.76 gal (8 litres) of fuel. Otherwise the hybrid mode will remain unavailable.

DISPLAYS AND INDICATORS (3/3)



Combustion engine temperature display *14*

Press the switch ***15*** to access the area ***B***, then press the switch ***16*** or ***17*** switch until the indicator is displayed.

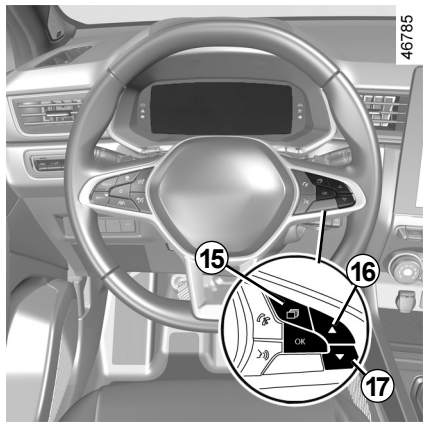

TRIP COMPUTER AND WARNING SYSTEM: operating fault messages

These appear with the warning light to inform you that you should drive very carefully to an approved dealer as soon as possible. If you fail to follow this recommendation, you risk damaging your vehicle.

They disappear when the display selection key is pressed or after several seconds and are stored in the computer log. The warning light stays on. Examples of operating fault messages are given in the following pages.

Examples of messages	Interpreting the display selected
«Check Electric System»	Indicates a fault in the traction system.

TRIP COMPUTER: warning messages

These appear with the STOP warning light and require you to stop immediately, for your own safety, as soon as traffic conditions allow. Switch off the ignition and do not switch it on again. Call an approved Dealer.

Some examples of warning messages are given below:

Note: the messages appear on the display either individually or alternately (when there are several messages to be displayed), and may be accompanied by a warning light and/or a beep.

Examples of messages	Interpreting the display selected
«Electric motor failure»	Indicates that the vehicle is losing power.
«WARNING: Electric System»	Indicates a fault in the electric system.

HEADLIGHT BEAM ADJUSTMENT

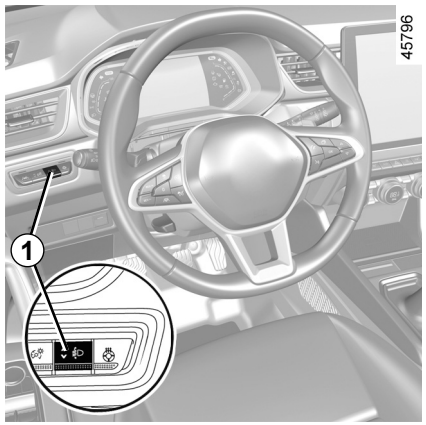

Switch ***1*** is used to adjust the height of the headlight beams according to the load.

With the dipped beam headlights lit, press or lift switch ***1*** as many times as is necessary to select the required position on the instrument panel.

Note: depending on the vehicle, each time the ignition is switched on, the position selected is displayed on the instrument panel for approximately 30 seconds and for approximately 5 seconds each time switch ***1*** is pressed.

	Examples of positions for adjusting control *1* according to the load
Driver alone or with front passenger	0
All seats occupied	1
Driver with passengers and luggage (or load) reaching the maximum permissible all-up weight	3
Driver without passengers and luggage (or load) reaching the maximum permissible all-up weight	4

The table below gives some examples. In all cases, adjust control ***1*** according to the vehicle load so that the road can be seen and other drivers are not dazzled.

FUEL TANK



Useable tank capacity:

48 litres approximately.

For more information on re-filling with fuel, please consult the paragraph entitled “Fuel tank” in Section 1 of the vehicle user manual.

STARTING, STOPPING THE HYBRID SYSTEM: VEHICLE WITH CARD (1/3)

58609



Starting the hybrid system

To switch on the ignition, the card must be positioned in the detection area ***1***.

– Set the gear lever to **P**;

– depress the brake pedal;

– press button ***2***. The message READY comes on, on the instrument panel, along with a beep.

The message disappears when the vehicle speed is above approximately 3.1 mph (5 km/h).

55220

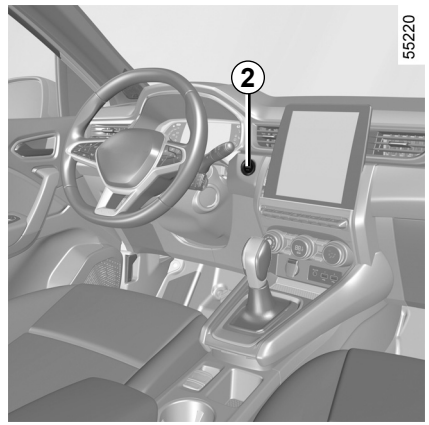

Special features

– If one of the starting conditions is not applied, the message “Press Brake + START” or “Select Gearbox Position “P”” is displayed on the instrument panel;

– in some cases, it will be necessary to move the steering wheel whilst pressing the start button ***2*** to help unlock the steering column; the message “Turn Steering Wheel + START” will alert you.

In order to preserve the 12 V battery, the engine unit will switch off automatically after approximately 15 minutes of the vehicle remaining stationary, as long as the driver’s seat belt has not been fastened and the engine has not already been stopped manually using the ***2*** button.

If necessary, you can restart the engine by pressing the ***2*** button once.

Before carrying out any operation in the engine compartment, you must switch off the ignition.

STARTING, STOPPING THE HYBRID SYSTEM: VEHICLE WITH CARD (2/3)

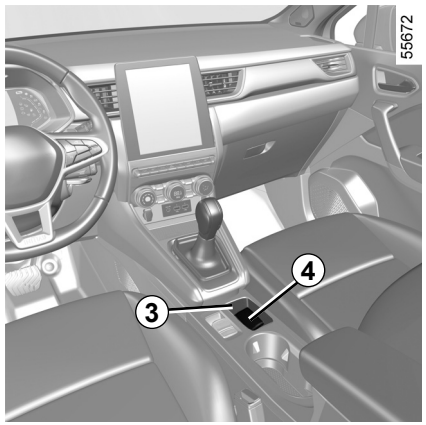

"Hands-free" starting with the tailgate open

In this case, the card should not be located in the luggage compartment, to prevent the risk of loss.

Accessories function

Once you have gained access to your vehicle, you may use some of its functions (radio, navigation, wipers, etc.).

To use the other functions, with the card in the passenger compartment, press the ***2*** button without pressing the pedals.

Operating faults

In certain cases, the hands-free card may not work:

– the card battery is drained, flat secondary 12 V battery etc.;

– near to appliances operating on the same frequency as the card (monitor, mobile phone, video game, etc.);

– vehicle located in a high electromagnetic radiation zone.

The message "Place card on zone + START" appears on the instrument panel.

Press the brake pedal, then place the card ***4*** (button side) on the placement area ***3***. Press button ***2*** to switch on the vehicle ignition. The message goes out.

Driver's responsibility when parking or stopping the vehicle

Never leave an animal, child or adult who is not self-sufficient alone in your vehicle, even for a short time.

They may pose a risk to themselves or to others by starting the engine, activating equipment such as the electric windows or locking the doors, for example.

Also, in hot and/or sunny weather, please remember that the temperature inside the passenger compartment increases very quickly.

RISK OF DEATH OR SERIOUS INJURY.

STARTING, STOPPING THE HYBRID SYSTEM: VEHICLE WITH CARD (3/3)

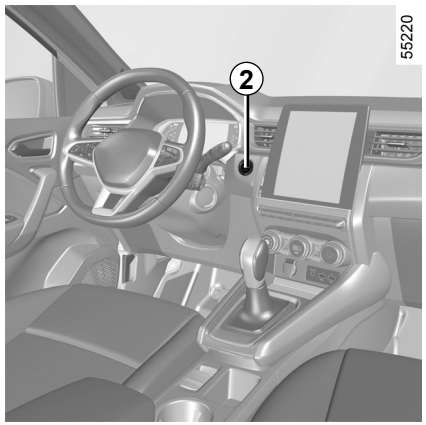

Stopping the hybrid system

When the vehicle stops, the READY message is displayed on the instrument panel.

Once the vehicle is stationary and the lever is set to **P** position, press the ***2*** button: the ignition is switched off and the READY message disappears from the instrument panel.

Before leaving the vehicle, check that the ignition has been switched off.

The steering column is locked when the driver's door is opened or the vehicle is locked.

If the card is no longer in the passenger compartment or if the card's battery is flat, when the vehicle is stationary and you try to switch the engine off, the message "Keycard absent : press/hold START" appears on the instrument panel: press the ***2*** button for longer than three seconds.

Once the ignition is switched off, any accessories being used (radio etc.) will continue to function for approximately 10 minutes.

When the driver's door is opened, the accessories stop working.

Exception

With the vehicle stationary and in electric operating mode, the "Active engine Switch off" message appears on the instrument panel accompanied by a beep if:

– the driver's seatbelt is not fastened;

– the bonnet is open;

– the driver's door is open.

Never switch off the ignition before the vehicle has stopped completely. Once the ignition is switched off, driving aids (for braking, steering, etc.) and passive safety devices such as airbags and pretensioners will no longer function.

DRIVING ADVICE, ECO-DRIVING

Consumption in real time depends on vehicle usage conditions, equipment fitted and the user's driving style. To optimise fuel consumption, please refer to the following advice.

Depending on the vehicle, you will be provided with functions which enable you to lower the energy consumption:

– the driving style indicator;

– the journey record and eco-driving advice via the multimedia screen;

– acceleration indicator Eco;

– "ECO" driving mode.

For more information on how to use these functions, please refer to Section 3 of your vehicle user manual.

Hybrid vehicles also include a charge meter.

The presence and display of this information depends on the type of ambient setting selected.



Charge meter

(on the instrument panel)

The charge meter gives the driver a real-time view of the vehicle's energy consumption.

Blue "Energy recovery" *A* usage zone

During driving, if you lift your foot off the accelerator pedal or press the brake pedal, the electric motor generates electrical current during deceleration and this energy is used to slow down the vehicle and recharge the traction battery.

"Energy consumption" *B* use area

The colour of the charge meter varies:

– **in green:** area recommended for limiting energy consumption. In all-electric or hybrid mode, the traction battery and/or the combustion engine supply the energy required to move the vehicle. This is the ECO zone;

– **in white:** high energy consumption area.

AUTOMATIC TRANSMISSION (1/3)

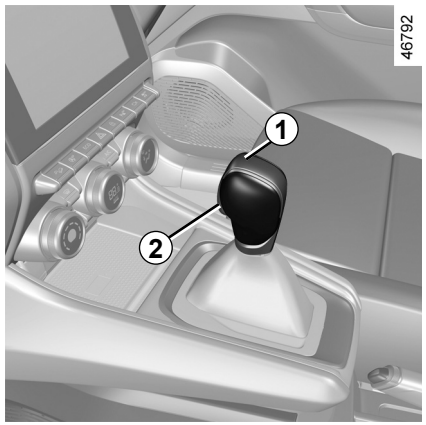

Selector lever *1*

P: park
R: reverse
N: Neutral
D: automatic mode
B : forward gear with increased regenerative braking

The ***4*** display on the instrument panel indicates the gear lever position engaged ***1***.

Note: press the ***2*** button to:
– exit position **P**;
– switch from position **D**, **B** or **N** to **R** or **P**;
– switch from position **D** to **B**.

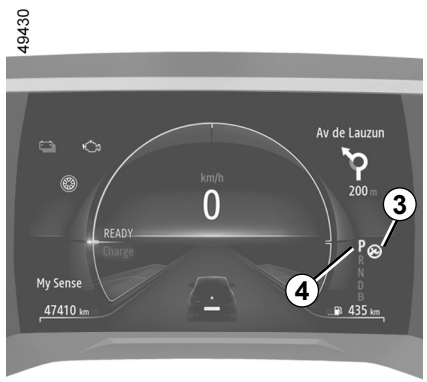

Operation

While the vehicle is stationary, set the gear selector ***1*** to **P** and start the vehicle. The message READY comes on, on the instrument panel.

To move out of position **P**, you must depress the brake pedal before pressing the unlocking button ***2***.

With your foot on the brake pedal (warning light ***3*** on the display goes out), move the lever out of position **P**.

Only engage D or R when the vehicle is stopped, with your foot on the brake and the accelerator pedal released.

The READY warning light displayed on the instrument panel indicates that the hybrid system is operating and ready for driving ➥ GB.21.

AUTOMATIC TRANSMISSION (2/3)

Driving in automatic mode

Put lever ***1*** into position **D**.

In most road conditions you will encounter, you will not need to touch your lever again: the gears will change automatically at the right time and at the most suitable engine speed because the automatic system takes into account the vehicle load and road contour and adjusts itself to the particular driving style you have chosen.

Economical driving

When driving, always leave the lever in position **D**, keeping the accelerator pedal lightly depressed to ensure automatic gear changes at a lower engine speed.

Accelerating and overtaking

Depress the accelerator pedal firmly and fully (so that it goes beyond the kickdown point).

This will enable you to change down to the optimum gear within the engine range.

Driving in mode B

This mode enables driving with greater regenerative engine braking. When releasing the accelerator pedal, the vehicle uses regenerative braking to slow down.

Thus the electric motor generates a higher electrical current which enables the traction battery to be recharged.

In **B** mode, the regenerative braking will be reduced if the accumulator is cold or completely charged.

The engine brake should under no circumstances be used as a substitute for the brake pedal.

Special cases

In certain driving conditions (resulting in, for example, engine protection, operation of the Electronic Stability Control programme: ESC etc.) the automated system may change the gear automatically.

To avoid the engine stalling in very cold weather, wait a few seconds before disengaging position **P** or **N** and engaging the lever in position **D**, **R** or **B**.

For safety reasons, do not switch off the ignition before the vehicle has come to a complete standstill.

Check that the indicator light **P** on the instrument panel is activated before leaving the vehicle.

Risk of loss of immobilisation of the vehicle.

AUTOMATIC TRANSMISSION (3/3)

Parking the vehicle

When the vehicle is stopped, move the lever to position **P** while keeping your foot on the brake pedal: the gearbox is in neutral and the drive wheels are mechanically locked by the driveshaft.
Ensure that the electronic parking brake is engaged.

In the event of an impact to the underside of the vehicle (e.g.: striking a post, raised kerb or other street furniture), this may result in damage to the vehicle (e.g.: twisted axle), the electrical circuit or the traction battery.
Do not touch the circuit elements or any fluids or liquids.
To prevent any risk of accident, have your vehicle checked by an authorised dealer.

Risk of serious injury or electric shock and risk to life.

Maintenance period

Refer to the maintenance document for your vehicle or consult an Approved Dealer to check whether the automatic gearbox requires scheduled maintenance.
If it does not need to be serviced, there is no need to top up the oil.

Operating faults

– **When driving**, if the “WARNING: Check Gearbox” message appears on the instrument panel, it indicates a fault. Contact your Approved Dealer as soon as possible;
– **when driving,** if the message “WARNING: Gearbox Overheating” appears on the instrument panel, stop as soon as possible to let the gearbox cool down and wait for the message to disappear;
– **breakdown recovery of a vehicle fitted with an automatic gearbox** ➥ GB.50.

P position must only be engaged when the vehicle is stationary.

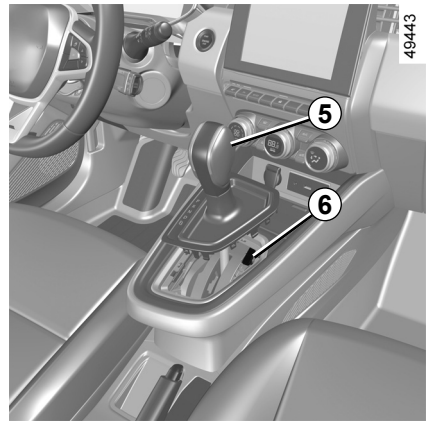

When setting off, if the lever is stuck in **P** when you press the brake pedal (e.g. battery fault), it is possible to manually release the lever to unblock the drive wheels. To do this, unclip the base of the gaiter and press the ***5*** push button while simultaneously pressing the ***6*** button on the lever to unlock the lever and shift to position **N**.

Contact an authorised dealer as soon as possible.

AIR CONDITIONING: information and advice on use

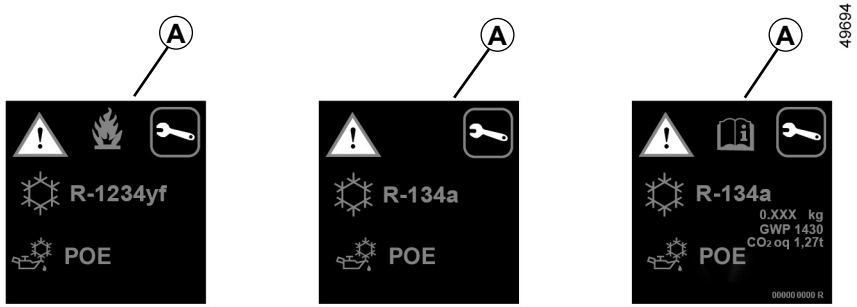

The refrigerant fluid circuit (of which some components are hermetically sealed) may contain fluorinated greenhouse gases.

Depending on the vehicle, you will find the following information on label ***A*** affixed inside the engine compartment.

The presence and location of the information on label ***A*** depends on the vehicle.

Do not open the refrigerant circuit. The fluid may damage eyes or skin.

Before carrying out any action in the engine compartment, you must switch off the ignition. ➥ GB.21.

Type of refrigerant fluid

Type of oil in the air conditioning circuit

Inflammable product

Consult the driver's handbook

Maintenance

x.xxx kg	Quantity of refrigerant fluid present in the vehicle.
GWP xxxxx	Global Warming Potential (CO2 equivalent).
CO2 eq x.xx t	Quantity in weight and in CO2 equivalent.

ENGINE OIL LEVEL: general information

A combustion engine uses oil for lubrication and cooling of moving parts and it is normal to top up the level between scheduled oil changes.

However, contact your approved Dealer if more than 0.5 litres is being consumed every 620 miles (1,000 km) after the running in period.

Oil change frequency: check the oil level from time to time and certainly before any long journey to avoid the risk of damaging your engine.

Reading the oil level

The oil level should be read with the vehicle on level ground, after the engine has been switched off for some time.

The dipstick must be used to read the exact oil level and make sure that the maximum level has not been exceeded (risk of engine damage).

Depending on the vehicle, the instrument panel display only alerts the driver when the oil level is at its minimum.

49645

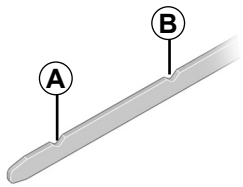

– Remove the dipstick and wipe with a clean, lint-free cloth;
– push the dipstick in as far as it will go;
– take out the dipstick again;
– read the level: it should never fall below the “mini” mark ***A*** and never exceed the “maxi” ***B*** mark.

Before carrying out any action in the engine compartment, you must switch off the ignition. ➥ GB.21.

Once the operation has been completed, ensure that the dipstick is pushed in as far as it will go or that the “cap-type dipstick” is completely screwed in.

Filling-up engine oil

Use a funnel or protect the filling neck area to avoid engine oil escaping onto a hot part of the engine compartment or a sensitive part (e.g. electrical components).

Fire hazard.

Exceeding the maximum engine oil level

Under no circumstances should maximum filling level ***B*** be exceeded: this could damage the engine and the anti-pollution system.

If the level exceeds the maximum level, **do not start your vehicle** and contact an authorised dealer.

HVSE23E2

ENGINE OIL LEVEL: topping up, filling, draining (1/2)

59079

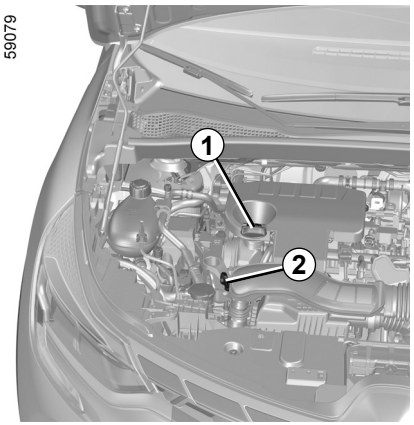

Topping up/filling

The vehicle must be parked on level ground and the engine should be cold (for instance, before the engine is started up for the first time in the day).

Before carrying out any action in the engine compartment, you must switch off the ignition. ➥ GB.21.

Proceed in the following order:

– unscrew the cap ***1***;

– top up the level (capacity between "**MINI**" and "**MAXI**" of the gauge ***2*** and between 0.9 to 2 litres according to the engine);

– wait for approximately **20 minutes** to allow the oil to flow into the engine;

– check the level using the dipstick ***2*** (as described above).

Once the operation has been completed, ensure that the dipstick is pushed in as far as it will go or that the cap-type dipstick is completely screwed in.

Do not exceed the "**MAXI**" level and do not forget to refit cap ***1*** and dipstick ***2***.

Adding engine oil

Use a funnel or protect the filling neck area to avoid engine oil escaping onto a hot part of the engine compartment or a sensitive part (e.g. electrical components).

Fire hazard.

ENGINE OIL LEVEL: topping up, filling, draining (2/2)

Oil change

Checking intervals:

Refer to the maintenance document for your vehicle.

Oil change capacity

Please refer to the maintenance document for your vehicle, or contact an authorised dealer. Always check the engine oil level using the dipstick, as explained previously (it should never fall below the minimum level or exceed the maximum level on the dipstick).

Engine oil grade

Refer to the maintenance document for your vehicle.

Consult your approved dealer at once if you notice an abnormal or repeated drop in any of the fluid levels.

Never run the engine in an enclosed space as exhaust gases are poisonous.

Filling and/or checking the oil level: when topping up or checking the oil level, ensure that no oil leaks onto the engine components. Do not forget to properly close the cap and refit the dipstick to prevent any oil spatter on hot engine components.

Fire hazard.

Please note when working close to the engine that it may be hot. The engine cooling fan may also start at any moment. The  label in the engine compartment reminds you of this.

Risk of injury.

When working in the engine compartment, ensure that the windscreen wiper stalk is in the park position.

Risk of injury.

Exceeding the maximum engine oil level

Under no circumstances should the maximum filling level be exceeded: this could damage the engine and the emission control system.

If the level exceeds the maximum level, **do not start your vehicle** and contact an authorised dealer.

Engine oil change: if you are changing the oil when the engine is hot, be careful not to scald yourself if the oil overflows.

LEVELS, FILTERS (1/4)

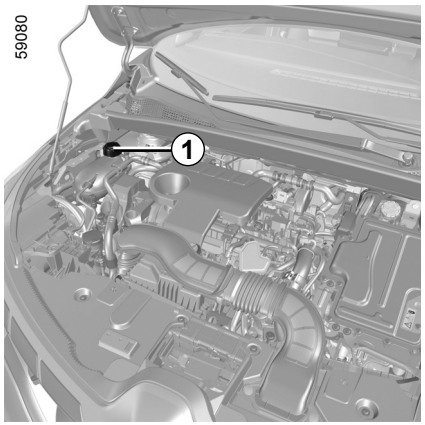

Combustion engine coolant

With the ignition off and the vehicle on flat ground, the level **when cold** must be between the “MINI” and “MAXI” marks indicated on the coolant reservoir ***1***.

Top this level up **when cold** before it reaches the MINI mark.

Frequency of checking coolant level

Check the coolant level regularly (very severe damage is likely to be caused to the combustion engine if it runs out of coolant).

If the level needs to be topped up, only use products approved by our Technical Department which ensure:

– antifreeze protection;

– an anti-corrosion protection for the cooling system.

Before carrying out any action in the engine compartment, you must switch off the ignition. ➥ GB.21.

Replacement interval

Refer to the Maintenance Document for your vehicle.

Consult your approved dealer at once if you notice an abnormal or repeated drop in any of the fluid levels.

When working in the engine compartment, ensure that the windscreen wiper stalk is in the park position.

Risk of injury.

No operations should be carried out on the cooling circuit when the combustion engine is hot.

Risk of burns.

HVSE23E2

LEVELS, FILTERS (2/4)

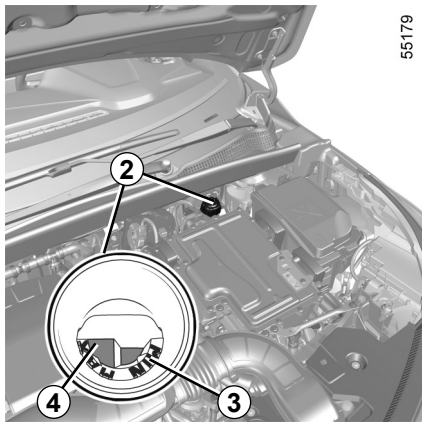

55179

Electric traction system coolant

This system is different to that of the combustion engine. It is used for cooling the electric motor.

Reading the level

With the ignition off and the vehicle parked on level ground, unscrew the cap from the coolant reservoir ***2***.

When **cold**, the level should be located between the “MIN” ***3*** and “MAX” ***4*** markings inside the funnel.

Frequency of checking coolant level

Check the coolant level regularly (very severe damage is likely to be caused to the electrical circuit if it runs out of coolant).

If a top-up is required, you must contact an approved dealer to perform the top-up.

Before carrying out any action in the engine compartment, you must switch off the ignition. ➥ GB.21.

Replacement interval

Refer to the Maintenance Document for your vehicle.

Consult your approved dealer at once if you notice an abnormal or repeated drop in any of the fluid levels.

When working in the engine compartment, ensure that the windscreen wiper stalk is in the park position.

Risk of injury.

No operations should be carried out on the cooling circuit when the combustion engine is hot.

Risk of burns.

HVSE23E2

LEVELS, FILTERS (3/4)

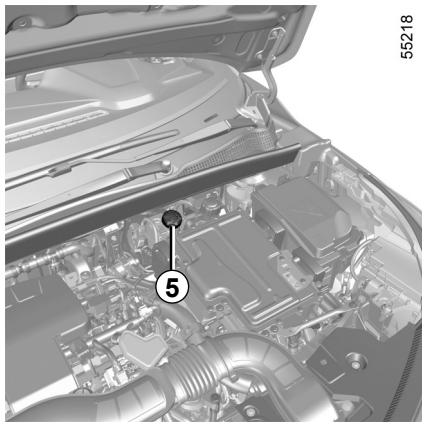

55218

Brake fluid

This should be checked frequently, and immediately if you notice even the slightest loss in braking efficiency.

The level is checked while the vehicle is on flat ground and the ignition is off.

Level *5*

It is normal for the level to drop as the brake shoes become worn, but it must never drop lower than the “MINI” warning line.

If you wish to check the disc and drum wear yourself, you should obtain the document explaining the checking procedure from the manufacturer’s network or web site.

Topping up

After any operation on the hydraulic circuit, a specialist must replace the brake fluid.

Only use fluids approved by our Technical Department (and taken from a sealed container).

Replacement interval

Refer to the Maintenance Document for your vehicle.

Before carrying out any action in the engine compartment, you must switch off the ignition. ➥ GB.21.

Consult your approved dealer at once if you notice an abnormal or repeated drop in any of the fluid levels.

When working in the engine compartment, ensure that the windscreen wiper stalk is in the park position.

Risk of injury.

When working close to the combustion engine, be aware that it may be hot. The engine cooling fan may also start at any moment. The label in the engine compartment reminds you of this.

Risk of injury.

HVSE23E2

LEVELS, FILTERS (4/4)

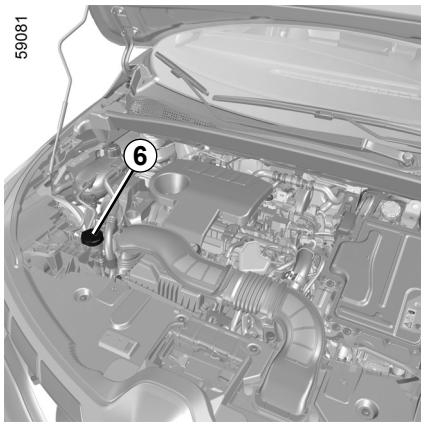

Windscreen washer reservoir

Topping up

With the ignition switched off, open the cap ***6***. Fill until you can see the fluid, then replace the cap.

Note: check the reservoir level regularly and top up the liquid before taking a trip.

Liquid

Windscreen washer fluid. In winter, use anti-freeze product. Use products recommended by an authorised dealer.

Note: do not use pure water (risk of damage to the priming pump, limescale building up on the pump and the jets).

Jets

To adjust the height of the windscreen washer jets, please consult an authorised dealer.

Before carrying out any action in the engine compartment, you must switch off the ignition. ➥ GB.21.

Filters

The filter elements (air filter, cabin filter etc.) should be replaced during the maintenance operations carried out on your vehicle.

Replacement intervals for filter elements: refer to the Maintenance Document for your vehicle.

When working in the engine compartment, ensure that the windscreen wiper stalk is in the park position.

Risk of injury.

When working close to the combustion engine, be aware that it may be hot. The engine cooling fan may also start at any moment. The label in the engine compartment reminds you of this.

Risk of injury.

SECONDARY “12 V” BATTERY (1/2)

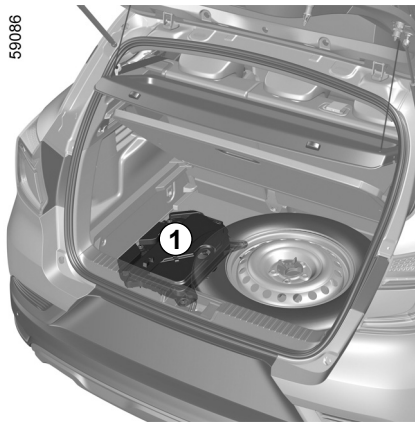

The secondary “12 V” battery ***1***, located in the luggage compartment of the hybrid vehicle, supplies the energy required to open/close the vehicle and to operate the equipment.

You should not open it or add any fluid.

The charge status of the secondary “12 V” battery ***1*** may decrease, especially if you use your vehicle:

– when the outside temperature drops;

– after extended use of energy-consuming functions while the ignition is switched off;

– after a prolonged period of parking.

For your own safety and to ensure the proper operation of the vehicle’s electrical equipment (lights, windscreen wipers, ABS etc.), any intervention on the secondary “12 V” battery (removal, disconnection etc.) must **ALWAYS** be performed by a specialist professional.

Risk of serious burns or electric shocks.

Respect **categorically** the replacement intervals (without exceeding them) as stated in the maintenance document.

The battery is a specific type. Please ensure it is replaced with the same type.

Call an approved Dealer.

SECONDARY “12 V” BATTERY (2/2)

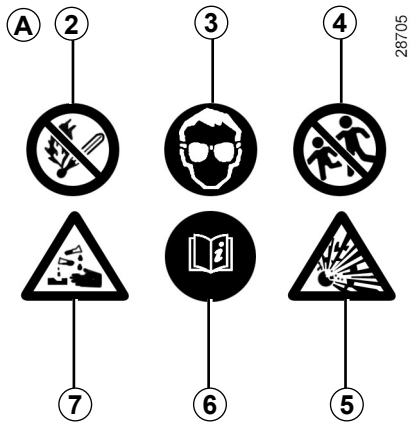

Label *A*

Observe the indications on the battery:

2 naked flames and smoking are forbidden;
3 eye protection required;
4 keep away from children;
5 explosive materials;
6 please consult the vehicle user manual;
7 corrosive substances.

Do not disconnect the secondary “12 V” battery.

Risk of serious burns or electric shocks.

HVSE23E2

PUNCTURE, EMERGENCY SPARE WHEEL (1/3)

In case of puncture

Depending on the vehicle, the following may be available:

– a tyre inflation kit located in the tray under the luggage compartment carpet or in the rear left-hand door storage compartment (depending on the vehicle). For more information, please see the paragraph entitled “Tyre inflation kit” in Section 5 of your vehicle user manual;

– an emergency spare wheel or self-repairing tyres (refer to the information on the following pages).

Vehicle fitted with a tyre pressure loss warning system

In the event of underinflation (punctures, underinflation etc.), the  warning light on the instrument panel comes on.

If the emergency spare wheel has been stored for several years, have it checked by your Dealer to ensure that it is safe to use.

Vehicle fitted with an emergency spare wheel that differs from the other wheels:

– never fit more than one emergency spare wheel to the same vehicle;

– replace the emergency spare wheel as soon as possible with a wheel identical to the original one;

– when this is fitted to the vehicle, which must only be a temporary measure, the driving speed must not exceed the speed indicated on the label on the wheel;

– fitting an emergency spare wheel may alter the way the vehicle usually runs. Avoid sudden acceleration or deceleration and reduce your speed when cornering;

– sf you need to use snow chains, fit the emergency spare wheel to the rear axle and check the tyre pressure.

If the vehicle is parked on the hard shoulder, you must warn other road users of your vehicle’s presence with a warning triangle or with other devices as per the legislation applying to the country you are in.

PUNCTURE, EMERGENCY SPARE WHEEL (2/3)

55614

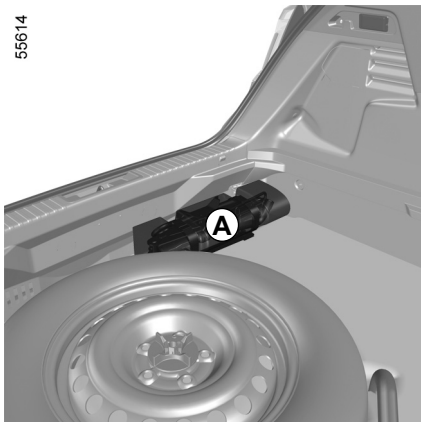

Tool kit *A*

The tools included in the tool kit depend on the vehicle. The tool kit ***A*** is held in place by straps under the luggage compartment carpet.

For more information, please refer to “Tools” in Section 5 of the vehicle user manual.

59088



Emergency spare wheel *B*

To get to it:

– open the boot;

– lift the luggage compartment carpet and fold it down between the rear bench seat and the storage compartment;

55603

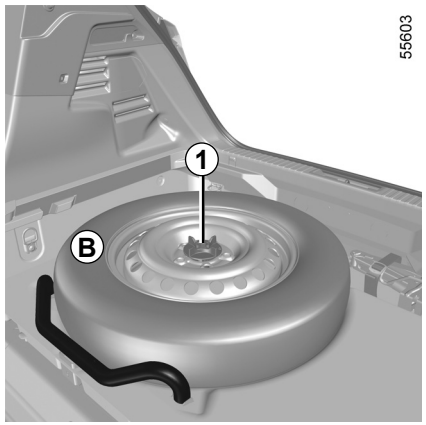

– unscrew the nut ***1*** to release the emergency spare wheel ***B***;

– remove the emergency spare wheel ***B***;

If the vehicle is parked on the hard shoulder, you must warn other road users of your vehicle’s presence with a warning triangle or with other devices as per the legislation applying to the country you are in.

PUNCTURE, EMERGENCY SPARE WHEEL (3/3)



– place the punctured wheel in the luggage compartment (position ***C***).

For more information on wheel replacement, please see Section 5 in the vehicle user manual.

TYRE PRESSURE KIT (1/3)

32788



The kit repairs tyres when tread ***A*** has been damaged by objects smaller than 4 mm. It cannot repair all types of puncture, such as cuts larger than 4 mm, or cuts in tyre sidewall ***B***.

Ensure also that the wheel rim is in good condition.

Do not pull out the foreign body causing the puncture if it is still in the tyre.

Do not attempt to use the inflation kit if the tyre has been damaged as a result of driving with a puncture.

You should therefore carefully check the condition of the tyre sidewalls before any operation.

Driving with underinflated, flat or punctured tyres can be dangerous and may make the tyre impossible to repair.

This repair is temporary.

A tyre which has been punctured should always be inspected (and repaired, where possible) as soon as possible by a specialist.

When taking a tyre which has been repaired using this kit to be replaced, you must inform the specialist.

When driving, vibration may be felt due to the presence of the repair product injected into the tyre.

The kit is only approved for inflating the tyres of the vehicle originally equipped with the kit.

It must never be used to inflate the tyres of another vehicle, or any other inflatable object (rubber ring, rubber boat, etc.).

Avoid spillage on skin when handling the repair product bottle. If droplets do leak out, rinse them off with plenty of water.

Keep the repair kit away from children.

Do not dispose of the empty bottle in the countryside. Return it to your approved dealer or to a recycling organisation.

The bottle has a limited service life which is indicated on its label. Check the expiry date.

Contact an approved dealer to replace the inflation tube and repair product bottle.

TYRE PRESSURE KIT (2/3)

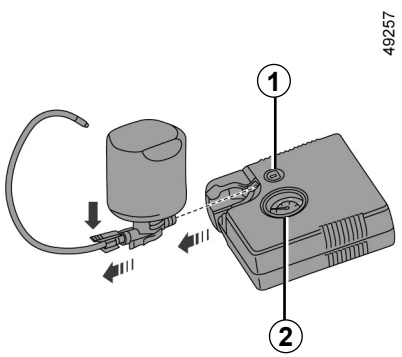

Depending on the vehicle, in the event of a puncture, use the kit located in the boot or underneath the luggage compartment carpet.

Vehicle fitted with a tyre pressure loss warning system

In the event of under-inflation (punctures, under-inflation etc.), the warning light appears on the instrument panel. ➥ GB.12.

Engine running, handbrake applied:

– disconnect any accessories previously connected to the vehicle's accessories sockets;

– **refer to the information on the inflation kit compressor** located in the boot of the vehicle and follow the instructions;

– inflate the tyre to the recommended pressure;

– after a maximum of **15** minutes, stop inflating and read the pressure (on pressure gauge ***2***).

Note: while the bottle is emptying (approximately 30 seconds), the pressure gauge ***2*** will briefly indicate a pressure of **6** bar, then the pressure drops;

– Adjust the pressure: to increase it, continue inflation with the kit. To reduce it, press the button ***1***.

If a minimum pressure of 1.8 bar is not reached after 15 minutes, repair is not possible; do not drive the vehicle but contact an approved dealer.

Before using this kit, park the vehicle at a sufficient distance from traffic, switch on the hazard warning lights, apply the handbrake, ask all passengers to leave the vehicle and keep them away from traffic.

If the vehicle is parked on the hard shoulder, you must warn other road users of your vehicle's presence with a warning triangle or with other devices as per the legislation applying to the country you are in.

TYRE PRESSURE KIT (3/3)

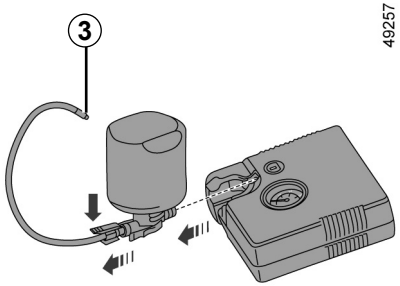

Once the tyre is correctly inflated, remove the kit: unscrew the inflation adapter slowly from the container ***3*** to prevent any product spatter and store the container in plastic packaging to prevent product leaks.

– Affix the driving recommendation label (located under the container) to the dashboard where the driver can see it.

– At the end of this initial inflation operation, air will still escape from the tyre. You must drive a short distance in order to seal the hole.

– Put the kit away.

– Start immediately and drive at a speed between 12 to 37 mph (20 to 60 km/h) in order to distribute the product evenly in the tyre; after driving a distance of 2 miles (3 km), stop and check the pressure.

– If the pressure is higher than 1.3 bar but lower than the recommended pressure (refer to the label affixed to the edge of the driver's door), adjust it. Otherwise, contact an approved dealer: the tyre cannot be repaired.

Precautions when using the kit

The kit should not be operated for more than 15 consecutive minutes.

Nothing should be placed around the driver's feet as such objects may slide under the pedals during sudden braking manoeuvres and obstruct their use.

The container must be replaced after the first use even if liquid remains inside.

Please be aware that a poorly tightened or missing valve cap can make the tyres less airtight and may lead to pressure loss.
Always use valve caps identical to those fitted originally and tighten them fully.

Following repair with the kit, do not travel further than 120 miles (200 km). In addition, reduce your speed and under no circumstances exceed 48 mph (80 km/h). The sticker, which you must affix in a prominent position on the dashboard, reminds you of this.
Depending on the country or local legislation, a tyre repaired with the inflation kit may need to be replaced.

REAR LIGHTS AND SIDE LIGHTS: replacing the bulbs (1/3)

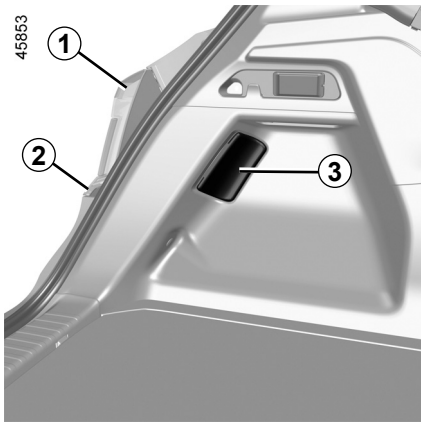

LED side light/brake light *1*

Consult an approved dealer

Direction indicators *2*

– Open the boot;

– remove the trim ***3***;

– for the right-hand light, move aside the duct ***4*** to access the nut ***5***;

– unscrew the nut ***5***;

– release the light assembly from outside the vehicle by pulling towards the rear;

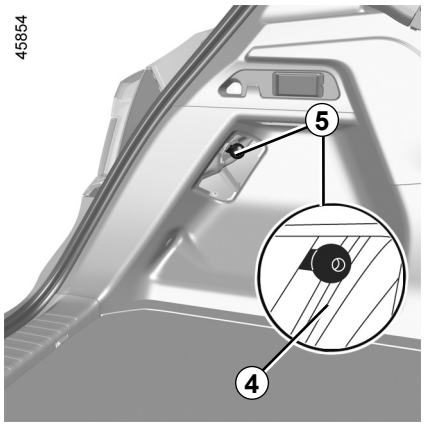

– remove the ***6*** bulb holder by unscrewing it a quarter of a turn, then replace the bulb.

Bulb type: WY16W.

To comply with current legislation, or as a precaution, you can obtain an emergency kit from your approved dealer containing a set of spare bulbs and fuses.

The bulbs are under pressure and can break when replaced.

Risk of injury.

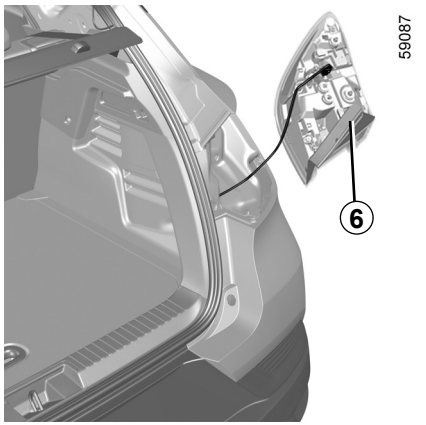

Refitting

To refit, proceed in the reverse order, taking care not to damage the wiring.

When refitting the right-hand light, ensure that the duct ***4*** has been replaced in its original position.

REAR LIGHTS AND SIDE LIGHTS: replacing the bulbs (2/3)



Fog lights and LED reversing lights *7*

Consult an approved dealer

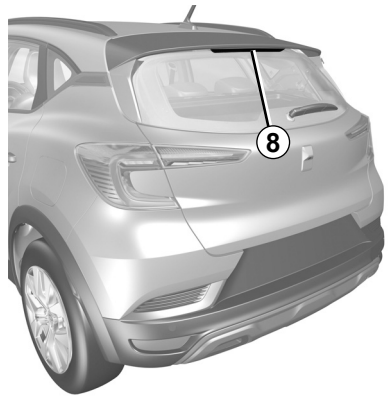

High-level LED brake light *8*

Consult an approved dealer.

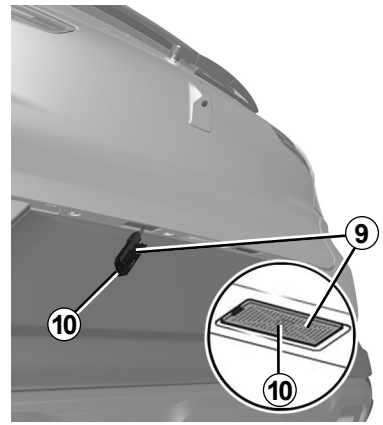

Number plate lights *9*

– Unclip the light by pressing tab ***10***;

– remove the light cover to gain access to the bulb.

Bulb type: W5W.

The bulbs are under pressure and can break when replaced.

Risk of injury.

REAR LIGHTS AND SIDE LIGHTS: replacing the bulbs (3/3)

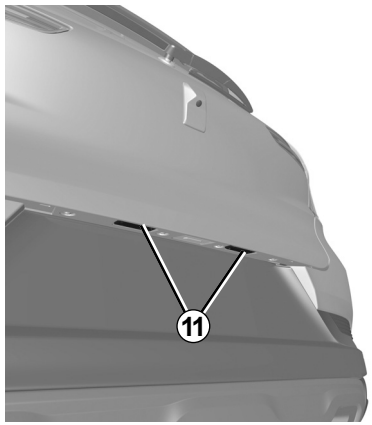

58656

LED number plate lights *11*
(depending on vehicle)

Consult an approved Dealer.

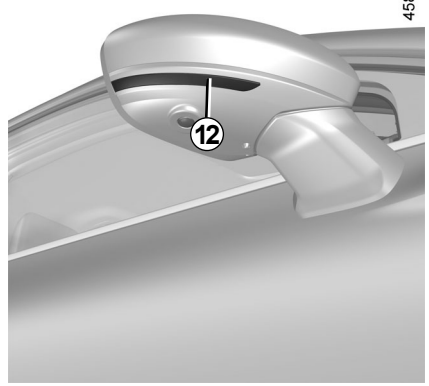

45806

LED side repeaters*12*
(depending on vehicle)

Consult an approved dealer.

The bulbs are under pressure and can break when replaced.

Risk of injury.

HVSE23E2

SECONDARY “12 V” BATTERY: BREAKDOWN RECOVERY (1/3)

Starting the vehicle using the battery from another vehicle

If the secondary “12 V” battery charge level is too low, it is possible to use the battery of another vehicle to re-activate and operate the hybrid system. ➥ GB.21.

As the battery cannot be directly accessed, it is necessary to use the remote terminals located in the engine compartment.

Obtain suitable leads (large cross-section) from an approved dealer. If you already have jump leads, ensure that they are in good condition.

The two batteries must have an identical nominal voltage: “12 V”. The battery supplying the current should have a capacity (amp-hours, Ah) which is at least the same as that of the discharged battery.

Ensure that there is no risk of contact between the two vehicles (risk of short circuiting when the positive terminals are connected) and that the discharged battery is properly connected. Switch off your vehicle ignition.

Start the engine of the vehicle supplying the current and run it at a moderate speed.

Do not use your hybrid vehicle to restart a “12 V” battery in another vehicle. The electrical power in the secondary “12 V” battery of a hybrid vehicle is not sufficient for this operation.
Risk of damage to the vehicle.



Please note when working close to the engine that it may be hot. The engine cooling fan may also start at any moment. The  label in the engine compartment reminds you of this.

Risk of injury.



Do not carry out any work under the bonnet while the vehicle is charging or while the ignition is switched on ➥ GB.21.

HVSE23E2

SECONDARY “12 V” BATTERY: BREAKDOWN RECOVERY (2/3)

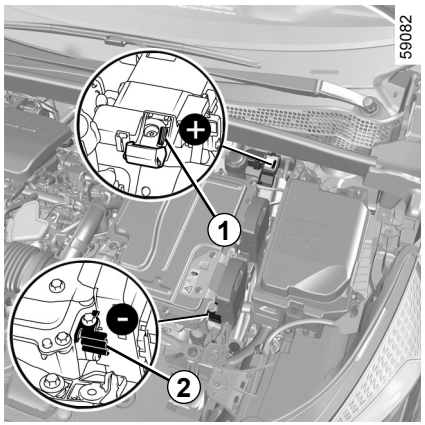

Remote terminals

Use the **terminal *1*** (+) and the **terminal *2*** (–) in the engine compartment.

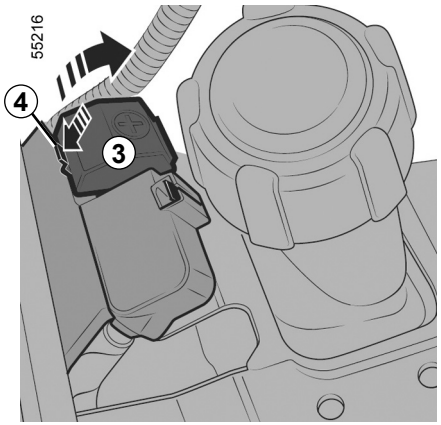

Note: open the cover ***3*** of the **terminal *1*** (+) by pressing the button ***4*** as indicated by the arrow.

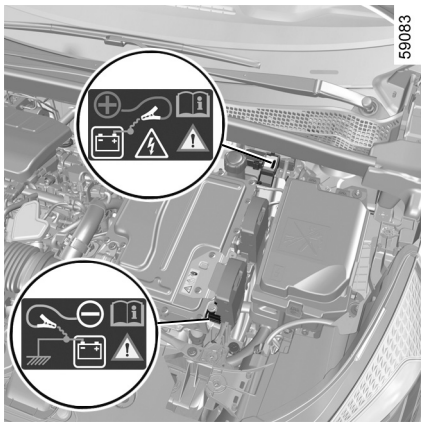

It is forbidden to disconnect the positive cable in the engine compartment.

Risk of the engine starting inadvertently.

Risk of burns by projection of sparks.

Check that there is no contact between leads ***A*** and ***B*** and that the positive lead ***A*** is not touching any metal parts on the vehicle supplying the current.

Risk of injury and/or damage to the vehicle.

SECONDARY “12 V” BATTERY: BREAKDOWN RECOVERY (3/3)

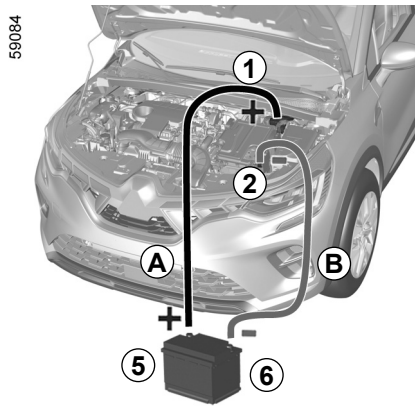

Attach the positive cable ***A*** to the **terminal *1*** (+), then to the **terminal *5*** (+) of the battery supplying the current.

Connect the negative cable ***B*** to the **terminal *6*** (–) of the battery supplying the current and then to the **terminal *2*** (–)**.**

Press the brake pedal and the Start button. Once the engine is running, disconnect cables ***A*** and ***B*** in reverse order **(*1- 5 - 6 - 2*)**.

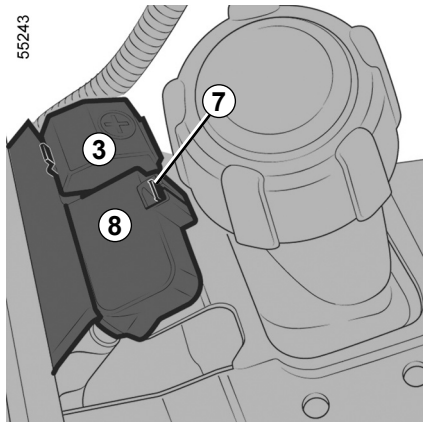

After each operation of the cover ***3***, check the terminal block cover ***8*** on its tab ***7***.

TOWING, BREAKDOWN (1/2)

Before towing anything, set the gear lever to **N** position**, wait for approximately one minute**, unlock the steering column then release the parking brake.

Steering column unlocking

With the card in the passenger compartment, press the engine start button for approximately **two seconds**.

Reset the gear lever to **N , then wait for approximately one minute** before towing.

The steering column unlocks, the accessory functions are powered: you can use the vehicle's lights (direction indicators, brake lights, etc.). At night the vehicle must have its lights on.

Once you have finished towing, you can (depending on the vehicle) press the engine start button twice (Note: risk of running down the battery).

When the ignition is off, the steering and braking assistance functions no longer operate.

The speed specified by current legislation for towing must always be observed. If you are driving the towing vehicle, do not exceed the permissible towing weight for your vehicle. Refer to the paragraph on "Weights" in Section 6 of the vehicle user manual.

Towing the vehicle

Transport the vehicle on a trailer or tow it with the front wheels off the ground.

Leave the card in the vehicle during towing.

Risk of the steering column locking.

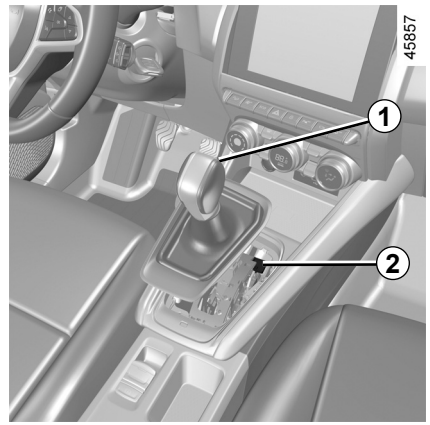

Automatic gearbox

When setting off, if the lever is locked in position **P** even though you are pressing the brake pedal, the lever can be released manually in order to unlock the drive wheels.

To do this, unclip the base of the gaiter and press the ***2*** push button while simultaneously pressing the ***1*** button on the lever to unlock the lever and shift to position **N**.

Contact an authorised dealer as soon as possible.

TOWING, BREAKDOWN (2/2)

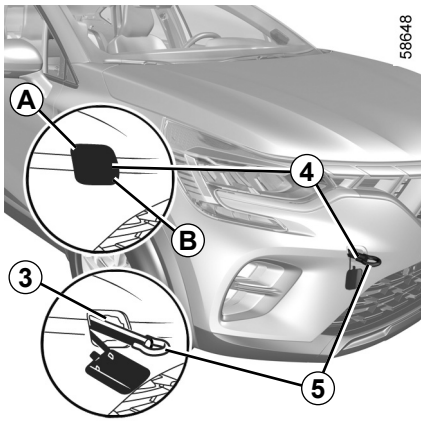

Only use the front *3* and rear *7* towing points (never use the driveshafts or any other part of the vehicle).

These towing points may only be used for pulling.

They must never be used for lifting the vehicle directly or indirectly.

Ensure that the towing eye is bolted correctly.

Risk of losing the towed object.

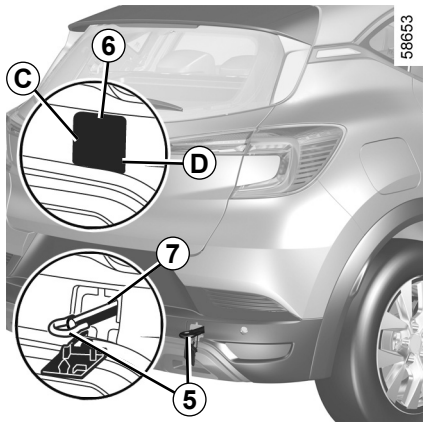

Access to towing points

Front towing point
Press zone ***A*** and keep depressed while pulling zone ***B*** to open flap ***4***.

Rear towing point
Press zone ***C*** and keep depressed while pulling zone ***D*** to open flap ***6***.

Do not leave the tools unsecured inside the vehicle as they may come loose under braking.

Tighten the towing hitch *5* fully: first by hand until it stops, then finish by locking it with the wheel brace or, depending on the vehicle, the lever.

Only use the towing eye ***5*** and the wheelbrace or lever provided with the tools. For more information, please refer to “Tools” in Section 5 of the vehicle user manual.

– Use a rigid towing bar. If a rope or cable is used (where the law allows this), the vehicle being towed must be able to brake.
– A vehicle must not be towed if it is not fit to be driven.
– Avoid accelerating or braking suddenly when towing, as this may result in damage being caused to the vehicle.
– In all cases, it is advisable not to exceed **15.5 mph (25 km/h)**.

ENGINE IDENTIFICATION

33293

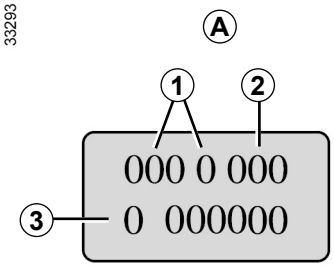

59077

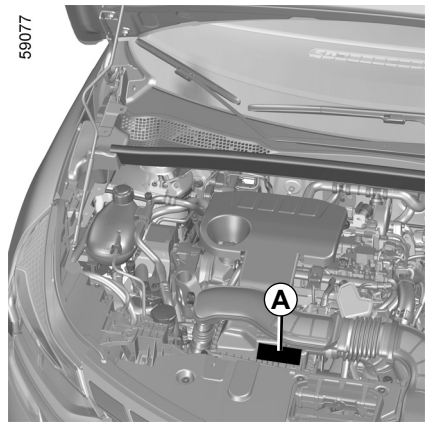

Please quote the engine identification information in area *A* in all correspondence or orders.
(Location varies depending on engine)

1 Engine type.
2 Engine suffix.
3 Engine serial number.

ENGINE SPECIFICATIONS (1/3)

Versions	**Hybrid**	
Engine type (see engine plate)	H4M	5DH
Cubic capacity (cc)	1598	-
Type of fuel **Octane rating**	Petrol It is **essential** that you use unleaded petrol of the octane rating stated on the label inside the fuel filler flap. For more information, please refer to Section 1 of your vehicle user manual.	-

ENGINE SPECIFICATIONS (2/3)

Versions	**Hybrid**	
Engine type (see engine plate)	H4M	5DH
Cubic capacity (cc)	1598	-
Fuel types that meet European standards and are compatible with the engines of vehicles sold in Europe (in any other case, contact an Approved Dealer).	**E5** Unleaded petrol compliant with standard **EN 228** contains up to 5% ethanol in volume. **E10** Unleaded petrol compliant with standard **EN 228** contains up to 10% ethanol in volume.	-

ENGINE SPECIFICATIONS (3/3)

Versions	**Hybrid**	
Engine type (see engine plate)	H4M	5DH
Cubic capacity (cc)	1598	-
Spark plugs	Only use the spark plugs specified for your vehicle's engine. The type should be marked on a label affixed inside the engine compartment. If it is not then contact an approved Dealer. Fitting spark plugs other than those specified may damage the engine.	-

Jaune Noir Noir texte