Welcome to your new vehicle

This driver's handbook contains the information necessary:
– for you to familiarise yourself with your vehicle, to use it to its best advantage and to benefit fully from the all the functions and the technical developments it incorporates.
– to ensure that it always gives the best performance by following the simple, but comprehensive advice concerning regular maintenance.
– to enable you to deal quickly with minor faults not requiring specialist attention.
It is well worth taking a few minutes to read this handbook to familiarise yourself with the information and guidelines it contains about the vehicle and its functions and new features. If certain points are still unclear, our Network technicians will be only too pleased to provide you with any additional information.

To help you, you will find the following symbols:

 and  These appear in the vehicle and indicate that you should consult the manual for detailed information and/or limits on operations with respect to your vehicle's equipment.

➥ anywhere in the manual indicates a transfer to a page.

 **anywhere in the manual indicates a hazard, danger or a safety recommendation.**

The descriptions of the models given in this handbook are based on the technical specifications at the time of writing. **This handbook covers all items of equipment** (both standard and optional) **available for these models but whether or not these are fitted to the vehicle depends on the version, options selected and the country where the vehicle is sold.**
This handbook may also contain information about items of equipment to be introduced later in the model year.
The diagrams in the user manual are provided as examples.

Enjoy driving your new vehicle.

Translated from French. Copying or translation, in part or in full, is forbidden unless prior written permission has been obtained from the car manufacturer.

EXTERIOR

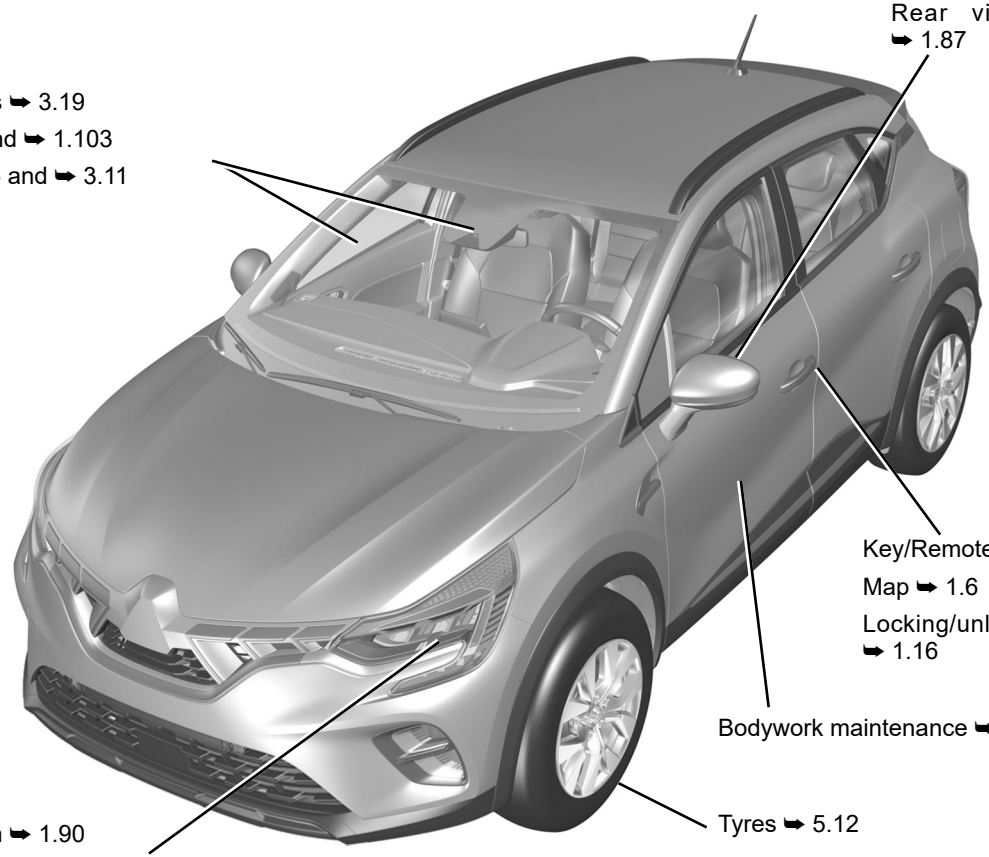

OVSE23E2

PASSENGER COMPARTMENT

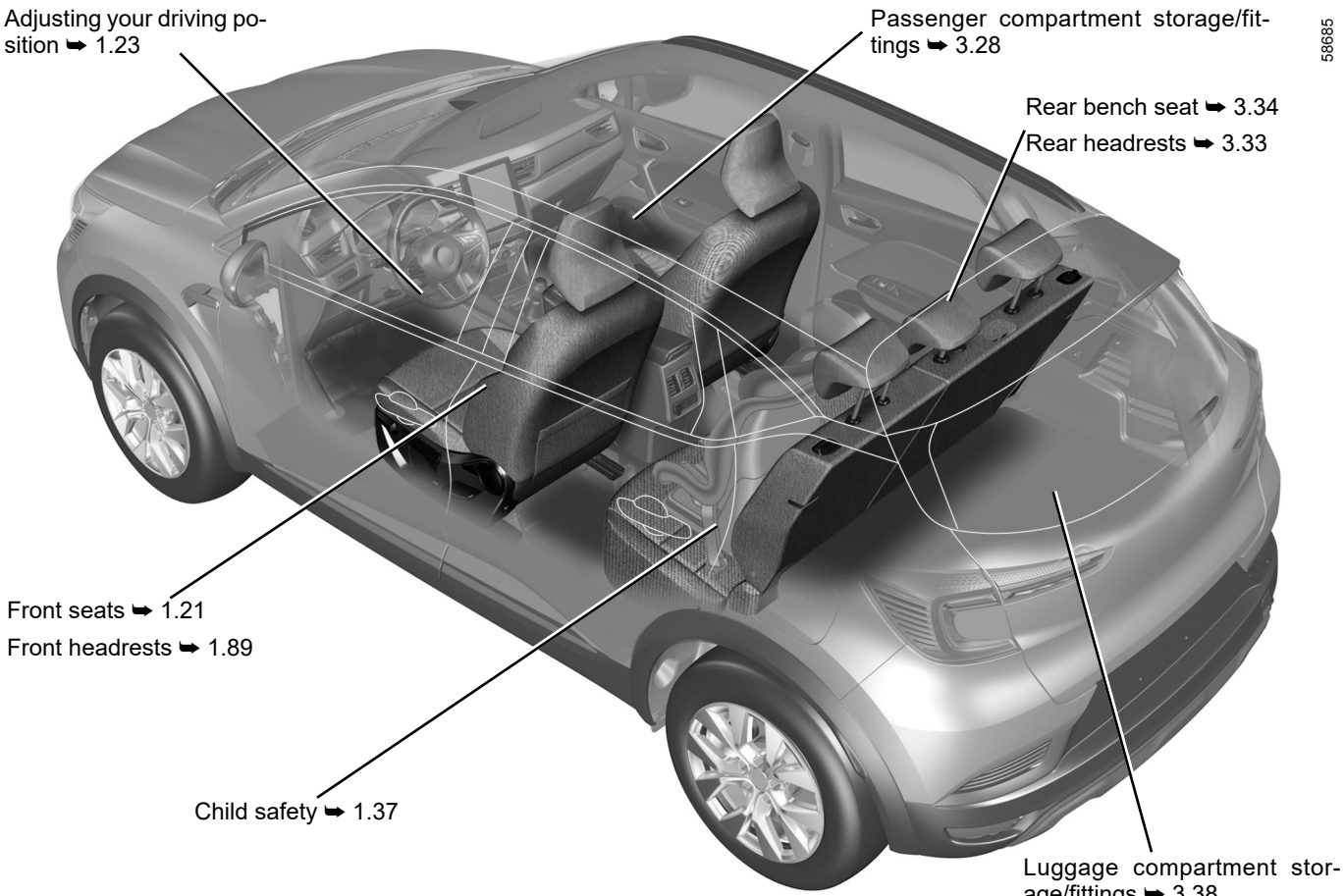

OVSE23E2

DRIVER'S POSITION

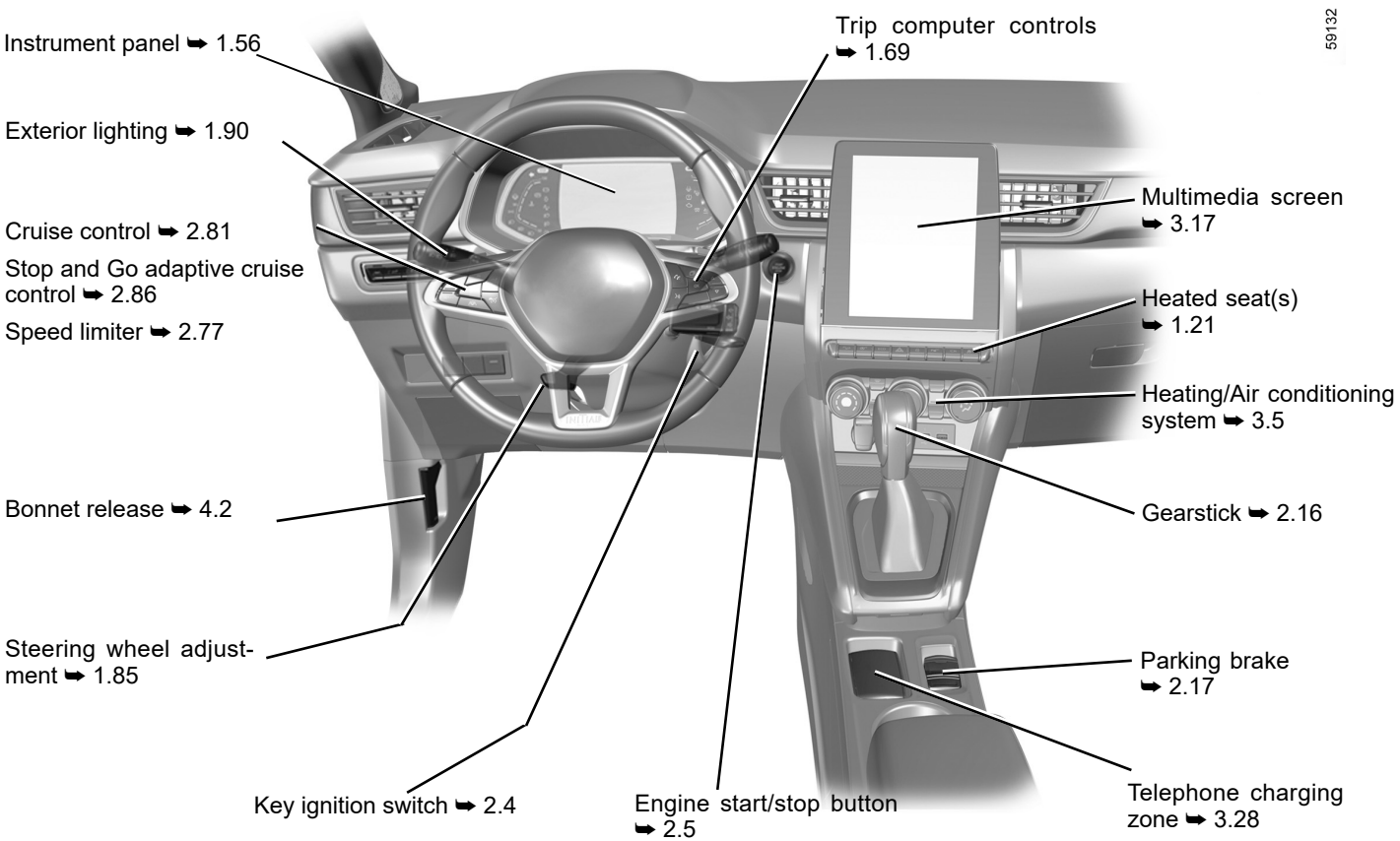

DRIVING AIDS

47325

ABS (anti-lock braking system)
ESC (electronic stability control)
Braking assistance
Hill start assistance
➥ 2.38

AUTOHOLD ➥ 2.21

Lane departure warning ➥ 2.43

Lane Keeping Assist ➥ 2.48

Active emergency braking ➥ 2.65

Blind spot warning ➥ 2.54

Stop and Start ➥ 2.10

Safe distance alert ➥ 2.61

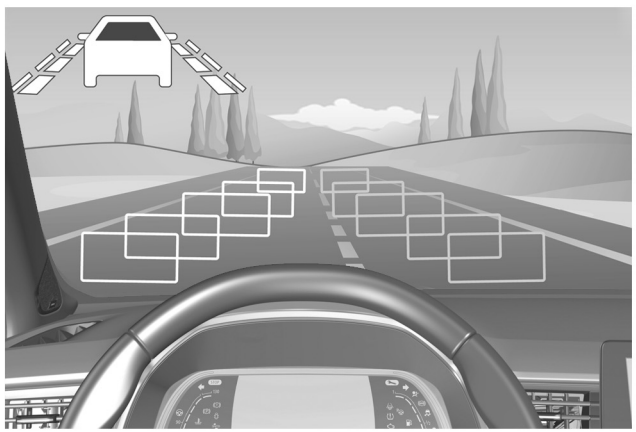

Speed limiter ➥ 2.77

Detection of road signs ➥ 2.73

Cruise control ➥ 2.81

Stop and Go adaptive cruise control ➥ 2.86

Parking distance control ➥ 2.116

Reversing camera ➥ 2.123

Tyre pressure loss warning ➥ 2.32

OVSE23E2

SAFETY ON BOARD

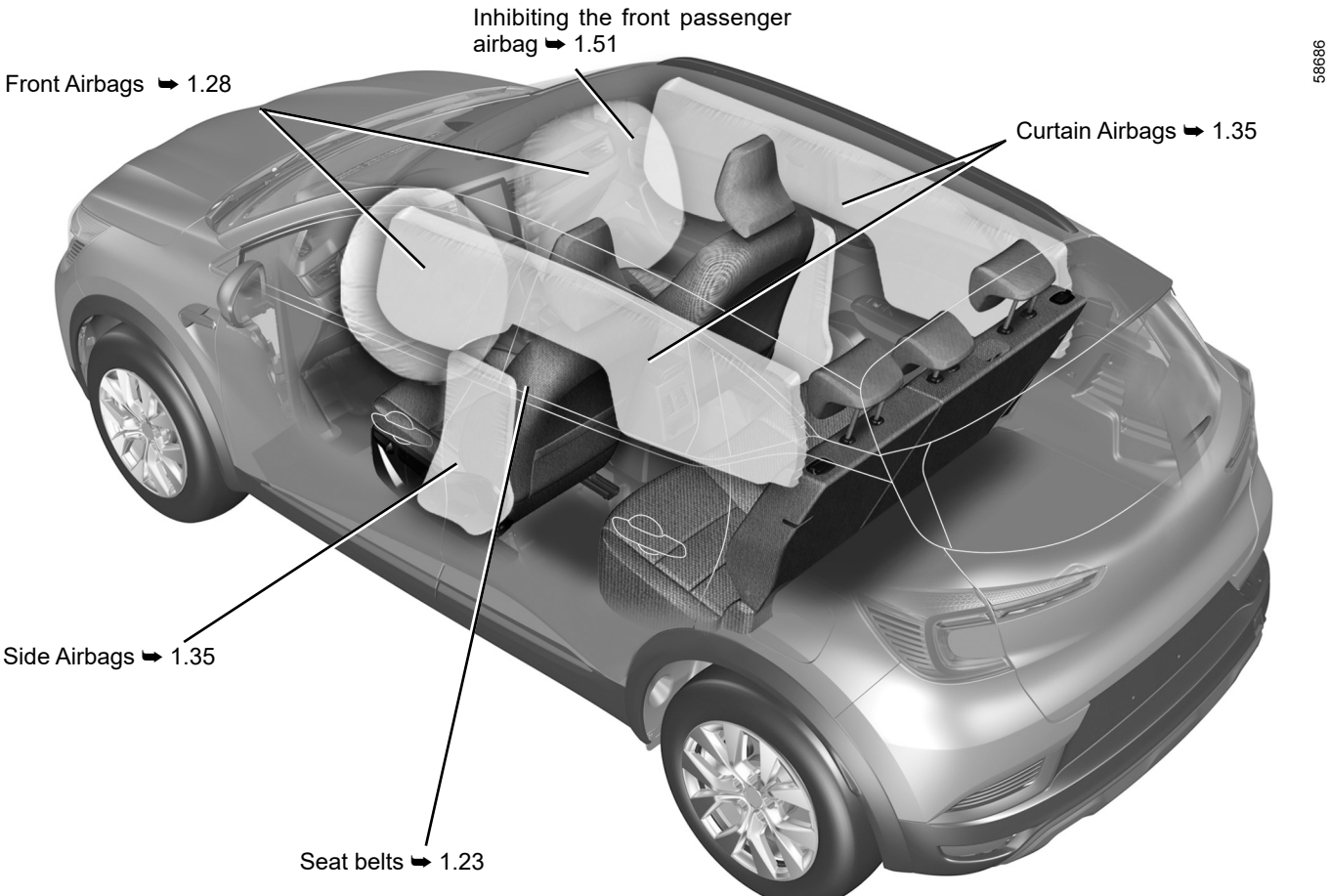

OVSE23E2

IDENTIFYING A VEHICLE - LABELS

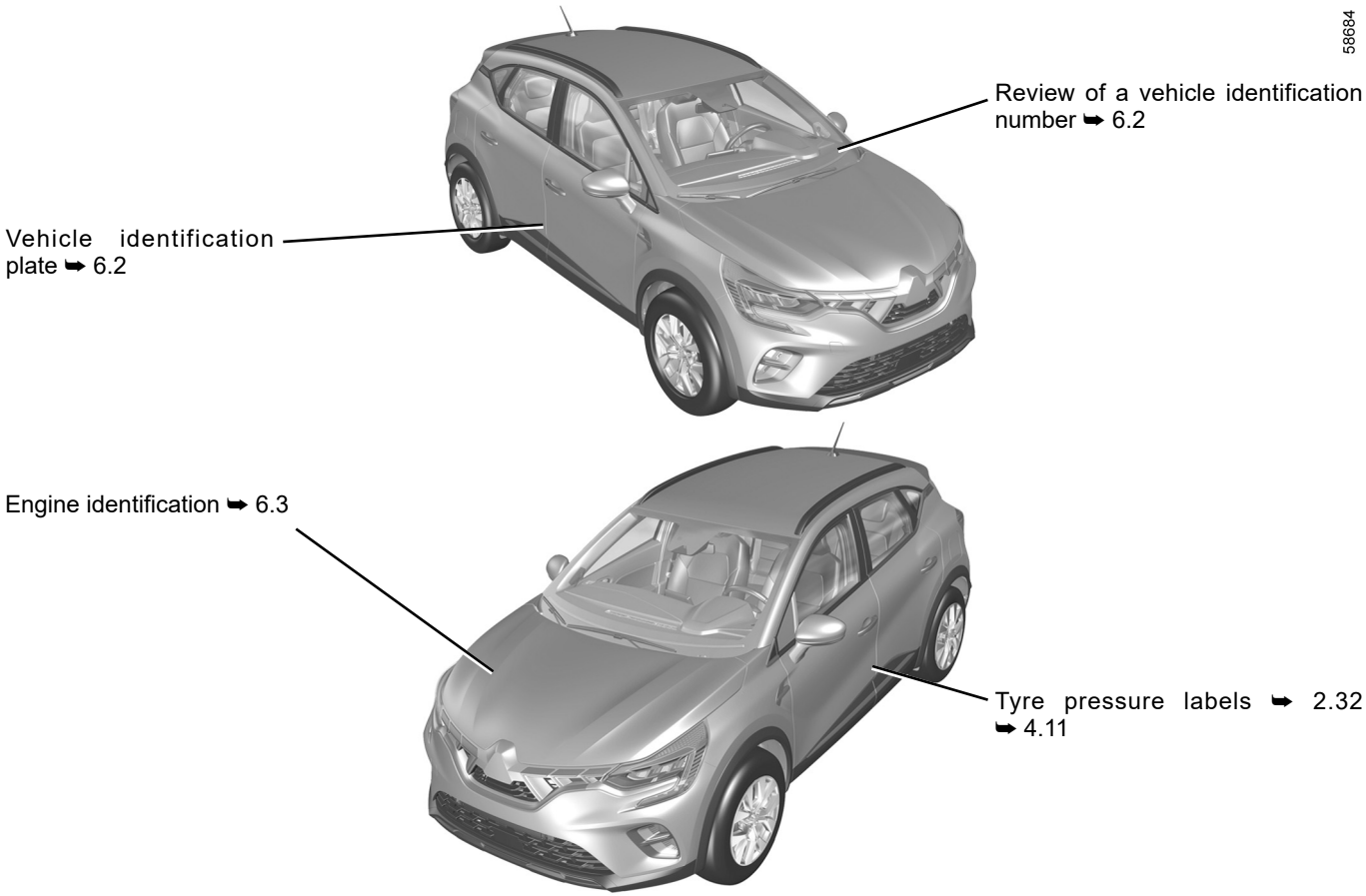

OVSE23E2

THE ENGINE COMPARTMENT (routine maintenance)

58688

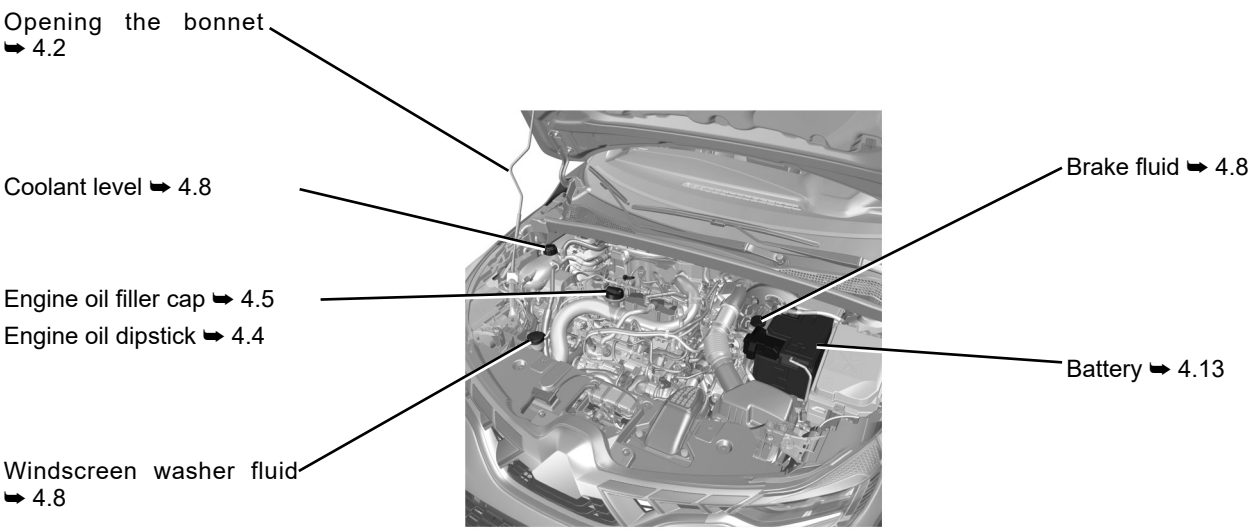

BREAKDOWN RECOVERY

58687

Replacing windscreen wiper blade(s) ➥ 1.98

Front towing point ➥ 5.36

Replacing the rear screen wiper blade ➥ 1.103

Replacement of the direction indicator lights ➥ 5.16

Rear towing point ➥ 5.36



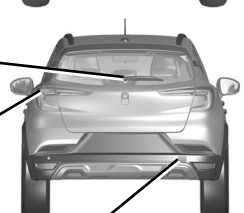

Puncture:

Tools ➥ 5.7

Emergency spare wheel ➥ 5.2

Changing a wheel ➥ 5.10



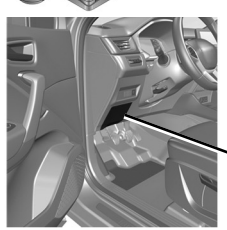

Fuses ➥ 5.31

C O N T E N T S

Sections

Getting to know your vehicle 1

Driving 2

Your comfort 3

Maintenance 4

Practical advice 5

Technical specifications 6

Alphabetical index 7

Section 1: Getting to know your Vehicle

Key, radio frequency remote control: general information, use, deadlocking 1.2
Card: general information, use, deadlocking 1.6
Opening and closing the doors 1.14
Locking, unlocking the opening elements 1.16
Automatic locking when driving 1.20
Seat belts 1.23
Additional methods of restraint 1.28
in addition to the front seat belts 1.28
to the rear seat belts 1.34
side 1.35
Child safety: general information 1.37
choosing a child seat mounting 1.40
fitting a child seat, general information 1.43
Child seats: attachment by seat belt or by Isofix system 1.45
Deactivating, activating the front passenger airbag 1.51
Driving position 1.54
Instrument panel 1.56
Displays and indicators 1.62
Trip computer 1.69
Vehicle settings personalisation menu 1.80
Clock and outdoor temperature 1.83
Steering wheel, Power-assisted steering 1.85
Rear view mirrors 1.87
Headrests - Seats 1.89
Exterior lighting and signals 1.90
Audible and visual signals 1.96
Headlight beam adjustment 1.97
Washers, wipers 1.98
Fuel tank (filling with fuel) 1.105

KEY, RADIO FREQUENCY REMOTE CONTROL: general information (1/2)

58914

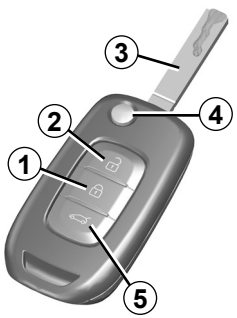

1 Locks all the opening elements.

2 Unlocks all the opening elements.

3 Driver's door and ignition key.

5 Locking/unlocking the boot only.

Remote control with switchblade key:

4 Locking/unlocking using the switchblade key. To release the insert from its housing, press button ***4***, it comes out automatically. Press button ***4*** and guide the insert back into its housing.

Advice

Avoid leaving the remote control in hot, cold or humid areas.

The key must not be used for any function other than those described in the handbook (removing the cap from a bottle, etc.).

Driver's responsibility when parking or stopping the vehicle

Never leave an animal, child or adult who is not self-sufficient alone on your vehicle, even for a short time.

They may pose a risk to themselves or to others by starting the engine, activating equipment such as the electric windows or locking the doors.

Also, in hot and/or sunny weather, please remember that the temperature inside the passenger compartment increases very quickly.

RISK OF DEATH OR SERIOUS INJURY.

KEY, RADIO FREQUENCY REMOTE CONTROL: general information (2/2)

Radio frequency remote control operating range

This varies according to the surroundings: take care not to lock or unlock the doors by inadvertently pressing the buttons on the remote control.

Note: if a door or the boot is open or not properly shut, locking is not carried out. A beep sounds and the hazard warning lights and side repeaters do not flash.

Interference
Interference by factors in the immediate vicinity (external installations or the use of equipment operating on the same frequency as the remote control) may affect the operation of the remote control.

Replacement and additional keys or remote controls.

You must only contact an approved dealer:

– If you need to replace a key it will be necessary to take the vehicle and all of its keys to an approved Dealer in order to initialise the system.

– Depending on the vehicle, you have the option of using up to four remote controls.

Remote control unit failure

Make sure that the correct battery type is being used, and that the battery is in good condition and inserted correctly. These batteries have a service life of approximately two years.

How to change the battery ➥ 5.22.

RADIO FREQUENCY REMOTE CONTROL: use

The remote control ***A*** can be used to lock or unlock the doors and boot. It is powered by a battery which can be replaced. ➥ 5.22.

Locking the doors

Press locking button ***1***.
The hazard lights and side repeaters **flash twice** to indicate that the doors have **locked** and, on some vehicles, the door mirrors fold in automatically.
Pressing the ***1*** button twice locks the vehicle and enables the closure of the front, rear windows and sunroof (depending on the vehicle).
Note: if a door or the boot is open or not properly shut, locking is not carried out. A beep sounds and the hazard warning lights and side repeaters do not flash.

Depending on the vehicle, the door mirrors fold in/out automatically when the vehicle is locked/unlocked ➥ 1.87

58914 Ⓐ

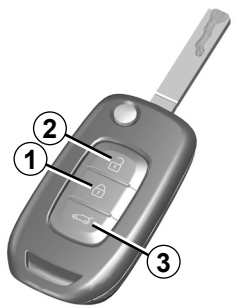

Locking/unlocking only the boot

Press the button ***3*** to lock/unlock the boot only.

Unlocking the doors

Pressing button ***2*** unlocks the doors and tailgate.

The hazard lights and side repeaters **flash once** to indicate that the doors have **unlocked** and, on some vehicles, the door mirrors fold out automatically.

Note: with the ignition on and the engine running ➥ 2.3, buttons on the remote control are not activated.

Driver's responsibility when parking or stopping the vehicle
Never leave an animal, child or adult who is not self-sufficient alone on your vehicle, even for a short time.
They may pose a risk to themselves or to others by starting the engine, activating equipment such as the electric windows or locking the doors.
Also, in hot and/or sunny weather, please remember that the temperature inside the passenger compartment increases very quickly.

RISK OF DEATH OR SERIOUS INJURY.

RADIO FREQUENCY REMOTE CONTROL UNIT: deadlocking

58914



To activate deadlocking

Press button ***1*** twice in quick succession.

Locking is confirmed by **two slow flashes** and **three quick flashes** of the hazard warning lights and side indicator lights.

Depending on the vehicle, the door mirrors fold in automatically when the vehicle is locked ➥ 1.87.

To deactivate deadlocking

Press the ***2*** button.

The hazard warning lights **flash once** to indicate that the doors have been unlocked.

Never use deadlocking if someone is still inside the vehicle.

CARD: general information (1/3)

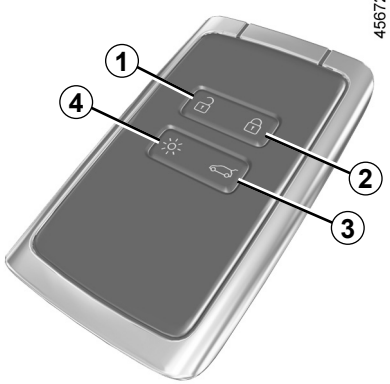

1 Unlocking the doors and tailgate.

2 Locking all doors and tailgate.

3 Locking/unlocking the boot only.

4 Switching-on the lighting remotely, or, depending on the vehicle,

5 Remote engine start-up.

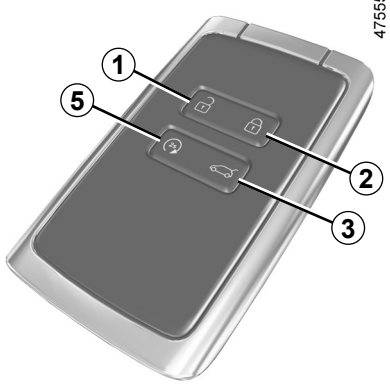

The card is used for:

– locking/unlocking the doors and tailgate (doors, tailgate) and the fuel filler flap (see the following pages);
– switching on the vehicle lighting remotely (refer to the following pages);
– automatic remote closing of the electric windows ➥ 3.19 ;
– starting the engine ➥ 2.5.

When the battery is flat, you can still lock/unlock and start your vehicle. ➥ 1.16, ➥ 2.5.

Battery life

Make sure that the correct battery type is being used, and that the battery is in good condition and inserted correctly. Its service life is approximately two years: it should be replaced when the message “Keycard Battery Low” appears on the instrument panel ➥ 5.24.

Remote engine start-up

(depending on vehicle)

Press button ***5*** to activate the remote engine start-up. ➥ 2.5.

card operating range

This varies according to the environment: take care not to accidentally lock or unlock the vehicle by inadvertently pressing the buttons on the card.

Note: if a door or the boot is open or not properly shut, locking is not carried out. A beep sounds and the hazard warning lights and side repeaters do not flash.

CARD: general information (2/3)



Distance lighting function

Pressing button ***4*** switches on the dipped beam headlights and the exterior lighting for approximately 20 seconds. This can be used, for example, to identify the vehicle from a distance when parked in a car park.

Pressing and holding the ***4*** button for approximately two seconds activates the exterior lighting and a sound is emitted.

Note: pressing button ***4*** again switches off the lighting.

Advice

Avoid leaving the card in hot, cold or humid areas.

Do not keep the card in a place where it could be bent or damaged accidentally, such as in a back pocket of a garment.

Replacement: need for an additional card

If you lose your card or require another, you can obtain one from an authorised dealer.

If a card is replaced, it will be necessary to take the vehicle **and all its cards** to an approved Dealer to initialise the system.

You may use up to four cards per vehicle.

Interference

Interference by factors in the immediate vicinity (external installations or the use of equipment operating on the same frequency as the card) may disrupt its operation.

Driver's responsibility when parking or stopping the vehicle

Never leave an animal, child or adult who is not self-sufficient alone in your vehicle, even for a short time.

They may pose a risk to themselves or to others by starting the engine, activating equipment such as the electric windows or locking the doors, for example.

Also, in hot and/or sunny weather, please remember that the temperature inside the passenger compartment increases very quickly.

RISK OF DEATH OR SERIOUS INJURY.

CARD: general information (3/3)

40303

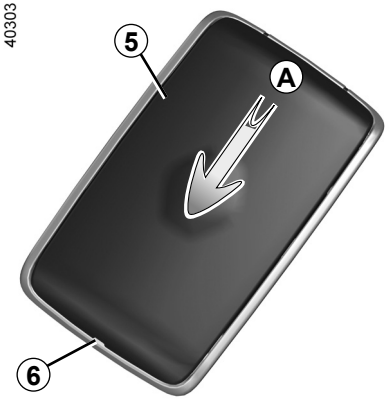

Fitting a strap *7*

Slide the rear casing ***5*** downwards while pressing on zone ***A***.

57037

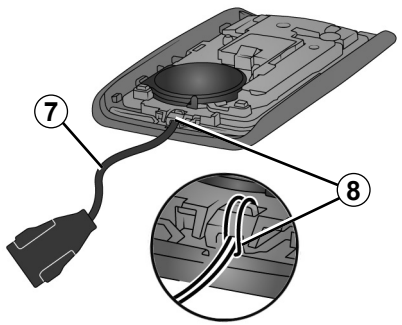

Insert the strap into the ***8*** component and pass the end of the strap through the buckle.

Position the strap at the ***6*** opening and close the cartridge.

Note: check that the diameter of the ***7*** strap cord fits the ***6*** opening.

“HANDS-FREE” CARD: use (1/4)

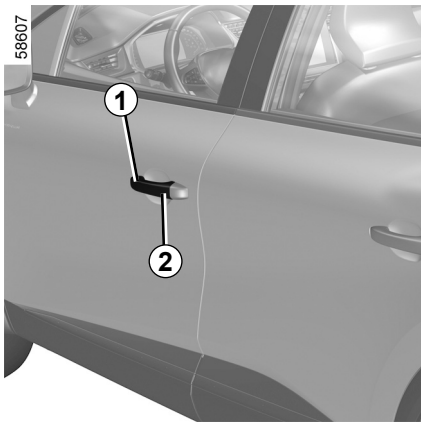

Depending on the vehicle, there are two to three ways to unlock/lock the vehicle:

– “hands-free”, when approaching and moving away from the vehicle;

– “hands-free”, using the ***2*** button on the ***1*** handle of one of the front doors;

– using the card in remote control mode.

Deactivating/activating the «hands-free» mode

Depending on the vehicle, you can deactivate/activate:

– unlocking when approaching and locking when moving away from the vehicle;

– locking and unlocking by pressing on the buttons on the door handle.

You can also disable/activate the sound signal that is emitted upon locking when moving away from the vehicle ➥ 1.80.

Do not store the card anywhere it may come into contact with other electronic equipment (computer, phone etc.) as this could hinder its operation.

Never leave your vehicle with the card inside.

Driver’s responsibility when parking or stopping the vehicle

Never leave an animal, child or adult who is not self-sufficient alone in your vehicle, even for a short time.

They may pose a risk to themselves or to others by starting the engine, activating equipment such as the electric windows or locking the doors, for example.

Also, in hot and/or sunny weather, please remember that the temperature inside the passenger compartment increases very quickly.

RISK OF DEATH OR SERIOUS INJURY.

“HANDS-FREE” CARD: use (2/4)

58610

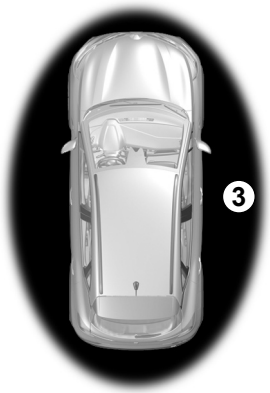

Hands-free unlocking, when approaching the vehicle;

With the card in access zone ***3***, the vehicle will unlock. Unlocking is indicated by **one flash** of the hazard warning lights and the indicator lights.

Depending on the vehicle, the door mirrors fold in/out automatically when the vehicle is locked/unlocked ➥ 1.87.

58609



Hands-free locking when moving away from the vehicle

With the card on you, doors and luggage compartment door closed, move away from the vehicle: it will lock automatically once you have left the access zone ***3***.

Note: the distance at which the vehicle locks depends on the surroundings.

To indicate that the vehicle has been locked, the hazard warning lights **flash twice** and then **light up** for approximately four seconds, and a beep sounds in confirmation.

45672



If the card has been within the detection area ***3*** for approximately 15 minutes, remote locking is disabled. To lock the vehicle, press the ***5*** button on the card or, depending on the vehicle, the ***2*** button on the handle ***1***.

The vehicle cannot be remotely locked if the card is within the area ***4***.

“HANDS-FREE” CARD: use (3/4)

58607

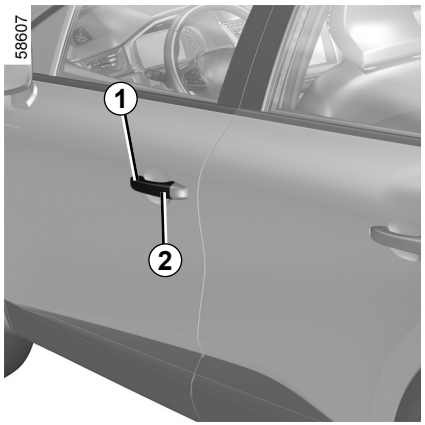

“Hands-free” unlocking/ locking using button *2*

(depending on the vehicle)

With the card in zone ***3*** and the vehicle locked, press the button ***2*** on the handle ***1*** of one of the two front doors: the vehicle unlocks. Press the button ***2*** also unlocks all the doors and the tailgate.
The hazard lights and side repeaters **flash once** to indicate that the doors have unlocked and, on some vehicles, the door mirrors fold out automatically.
Pressing the ***2*** button again locks the vehicle.

The hazard warning lights **flash twice** to indicate that the vehicle is locked and, depending on the vehicle, the door mirrors automatically fold in.

Special features of the unlocking system

Under certain circumstances, approach unlocking is deactivated:

– after eight days of no use of the vehicle;

– if the card remains close to the ***3*** area of the vehicle for approximately five minutes **after the vehicle has been locked**;

– after several passes in the vicinity of the ***3*** area of the vehicle and **without the door being unlocked**.

Use the remote control card or, depending on the vehicle, press the ***2*** button on the door handle ***1*** to unlock the vehicle and reactivate hands-free mode.

58609



Special features relating to “hands-free” locking

After locking in “hands-free” mode, you have to wait approximately three seconds to be able to unlock the vehicle again. During these three seconds, the door handles can be tried to make sure that the vehicle is locked properly.

Note: if a door or the boot is open or not properly shut, locking is not carried out. A beep sounds and the hazard warning lights and side repeaters do not flash.

“HANDS-FREE” CARD: use (4/4)

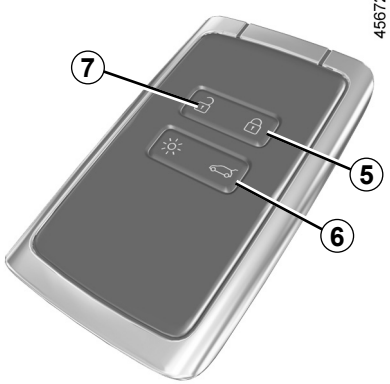

Using the card as a remote control

Unlocking with the card

Press button ***7***.
The hazard lights and side repeaters **flash once** to indicate that the doors have unlocked and, on some vehicles, the door mirrors fold out automatically.

The card buttons are deactivated when the engine is running.

Locking using the card

With the doors and boot closed, press button ***5***: the vehicle locks.

The hazard warning lights **flash twice** to indicate that the vehicle is locked and, depending on the vehicle, the door mirrors automatically fold in.

Pressing the ***5*** button twice locks the vehicle and enables the closure of the front and rear windows (depending on the vehicle).

Note:

– the maximum distance at which the vehicle locks depends on the surroundings;

– if a door or the boot is open or not properly shut, locking is not carried out. A beep sounds and the hazard warning lights and side repeaters do not flash.



If, **while the engine is running,** a door is opened and closed, and the card is no longer in the zone ***4***, the message “Keycard Not Detected” indicates that the card is not inside the vehicle. This will, for example, prevent you from driving away after dropping off a passenger who has kept the card on them.

The warning disappears when the card is detected again.

Locking/unlocking only the boot

Press the button ***6*** to lock/unlock the boot only.

“HANDS-FREE” CARD: DEADLOCKING

39100

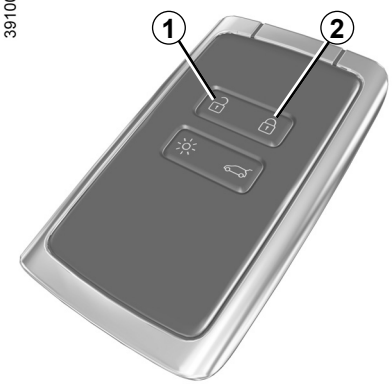

If the vehicle is equipped with a deadlocking function, this allows you to lock the opening elements and to prevent the doors from being unlocked using the interior handles (for example, by breaking the window and then trying to open the door from the inside).

Never use deadlocking if someone is still inside the vehicle.

To activate deadlocking

Press button ***2*** twice in quick succession.

Locking is confirmed by **two slow flashes** and **three quick flashes** of the hazard warning lights and side indicator lights.

Depending on the vehicle, the door mirrors fold in automatically when the vehicle is locked ➥ 1.87.

To deactivate deadlocking

Press the ***1*** button.

The hazard warning lights **flash once** to indicate that the doors have been unlocked.

OPENING AND CLOSING THE DOORS (1/2)



Opening the doors from the outside

Front doors

With the doors unlocked or the card on you, hold the ***1*** handle and pull towards you.

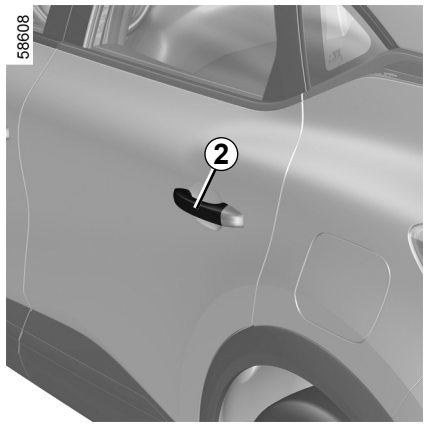

Rear doors

With the doors unlocked or the card on you, hold the ***2*** handle and pull towards you.

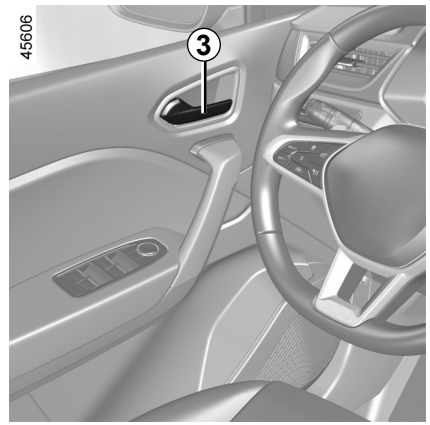

Opening from the inside

Pull handle ***3***.

Depending on the vehicle, it may be necessary to pull handle ***3*** twice: the first time to unlock the door, the second time to open it.

As a safety precaution, the doors should only be opened or closed when the vehicle is stationary.

OPENING AND CLOSING THE DOORS (2/2)

Lights-on reminder buzzer

If you have switched off the ignition and left the lights switched on, a reminder buzzer will sound when a door is opened.

Door/tailgate open buzzer

When the vehicle is stationary, the warning light appears on the instrument panel accompanied by a warning light indicating which of the opening elements (door(s), luggage compartment) are open or incorrectly closed.

Once the vehicle reaches a speed of approximately 6 mph (10 km/h), a warning light indicates if the door(s) or luggage compartment are open or not properly closed, along with the message “WARNING: Boot Open” or “WARNING: Door Open” and a beep will sound for around 40 seconds or until the door/luggage compartment is closed.

45661

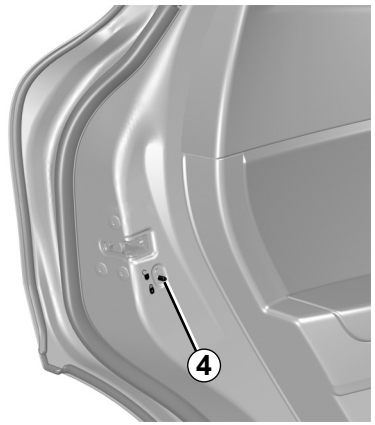

Child safety

Move lever ***4*** and check from the inside that the doors are securely locked, to prevent the rear doors being opened from the inside.

Driver’s responsibility when parking or stopping the vehicle

Never leave an animal, child or adult who is not self-sufficient alone on your vehicle, even for a short time.
They may pose a risk to themselves or to others by starting the engine, activating equipment such as the electric windows or locking the doors.
Also, in hot and/or sunny weather, please remember that the temperature inside the passenger compartment increases very quickly.
RISK OF DEATH OR SERIOUS INJURY.

LOCKING, UNLOCKING THE DOORS (1/4)

If the remote control or, depending on the vehicle, the card does not work

In some cases, the radio frequency remote control or the card may not work:
– card or radio frequency remote control battery worn or run flat, vehicle battery flat etc;
– use of appliances operating on the same frequency as the card (mobile phone, etc.);
– vehicle located in a high electromagnetic radiation zone.

It is then possible:
– to use the radio frequency remote control or the emergency key integrated in the card (depending on the vehicle) to unlock the driver's door;
– to use the interior door locking/unlocking control (refer to the following pages).

40303

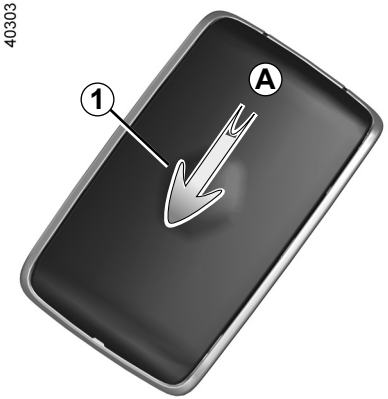

The card's built-in key

The ***2*** integrated key can be used to lock or unlock the driver's door when the card is not working.

Access with key 2

Slide the rear casing ***1*** downwards while pressing on zone ***A***.

45673



LOCKING, UNLOCKING THE DOORS (2/4)

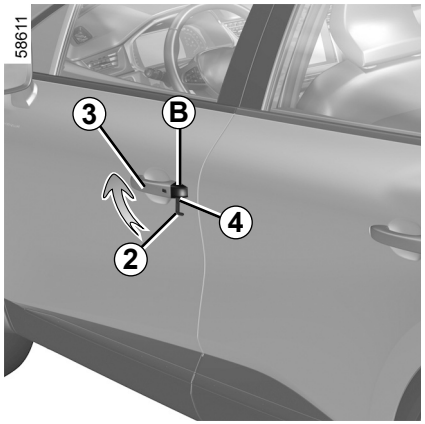

Using the key integrated in the card

– Pull handle ***3***;

– press the cover ***B*** on the driver's door down;

– insert the end of the key ***2*** in the notch ***4*** at the bottom of the cover ***B***;

– rotate it upwards to remove the cover ***B***;

– insert the key ***2*** into the lock of the driver's door, lock or unlock.

Once you are inside the vehicle, put the key back in its casing in the card.

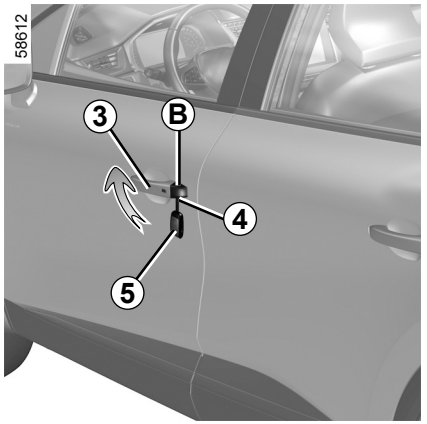

Vehicles with key/remote control

Using the key

– Pull handle ***3***;

– press the cover ***B*** on the driver's door down;

– insert the end of the key ***5*** in the notch ***4*** at the bottom of the cover ***B***;

– rotate it upwards to remove the cover ***B***;

– insert the key ***5*** into the lock of the driver's door, lock or unlock.

LOCKING, UNLOCKING THE DOORS (3/4)

45718

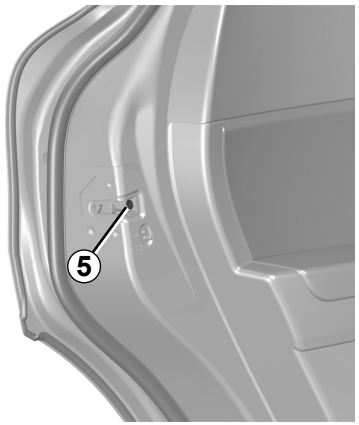

Locking the doors manually

Turn screw ***5*** with the door open (using the end of the key) and close the door.

This means that the doors are then locked from the outside.

The doors may then only be opened from the inside or by using the key in the driver's door.

45646

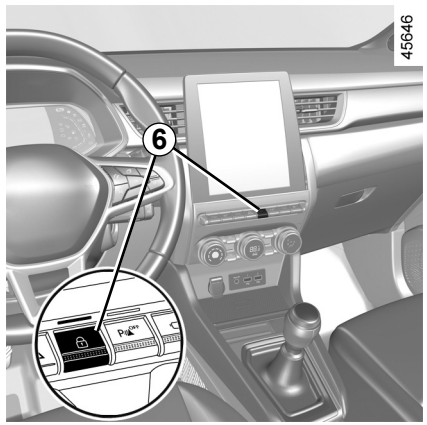

Interior locking/unlocking door control

Switch ***6*** controls the doors, the boot and the fuel filler flap simultaneously.

If a door or the tailgate is open or not closed properly, the doors and tailgate lock/unlock quickly.

If transporting an object with the tailgate open, you can still lock the doors: with the engine stopped, press and hold switch ***6*** to lock the other doors.

LOCKING, UNLOCKING THE DOORS (4/4)

Door and tailgate status indicator

When the ignition is on, the ***6*** switch warning light indicates the locking status of the opening elements:

– indicator light on, the doors and tailgate are locked;

– indicator light off, the doors and tailgate are unlocked.

When you lock the doors, the indicator light remains lit and then goes out.

Driver's responsibility

If you decide to keep the doors locked when you are driving, remember that it may be more difficult for those assisting you to gain access to the passenger compartment in the event of an emergency.

Locking the opening elements without the card or the key

For example, in the event of a discharged battery or the card or key temporarily not working etc.

With the engine switched off and a door or tailgate open, press and hold the ***6*** switch for more than five seconds.

When the door is closed, all the doors and the tailgate will be locked.

Note: unlocking the vehicle from the outside is only possible with the card in the vehicle's access zone or using the key.

Never leave your vehicle with the key or card inside.

OVSE23E2

AUTOMATIC LOCKING WHEN DRIVING

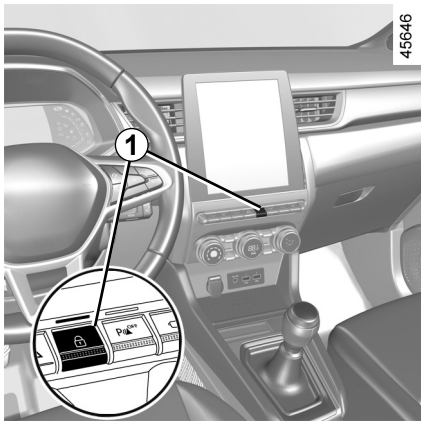

Operating principle

After the vehicle is started, the system automatically locks the doors when you are driving at approximately 6 mph (10 km/h) and over.

The door can be unlocked:
– by pressing the central door unlocking switch ***1***;
– at a standstill, by opening a front door from inside the vehicle.

NB: if a door is opened or closed, it will automatically lock again when the vehicle reaches a speed of 6 mph (10 km/h).

Activating/deactivating the function

To activate: with the vehicle stationary and the engine running, press the ***1*** switch until a beep sounds.

To deactivate: with the vehicle stationary and the engine running, press the switch ***1*** until you hear two beeps.

The function can also be activated and deactivated via the multimedia screen (depending on the vehicle). ➥ 1.80.

Operating faults

If you experience an operating fault (no central locking, the indicator light ***1*** does not light up when trying to lock the doors and luggage compartment etc.), make sure that central locking has not been deactivated by mistake and check that the doors and luggage compartment are properly closed. If they are properly closed, contact an approved dealer.

Driver's responsibility

If you decide to keep the doors locked when you are driving, remember that it may be more difficult for those assisting you to gain access to the passenger compartment in the event of an emergency.

FRONT SEATS (1/2)

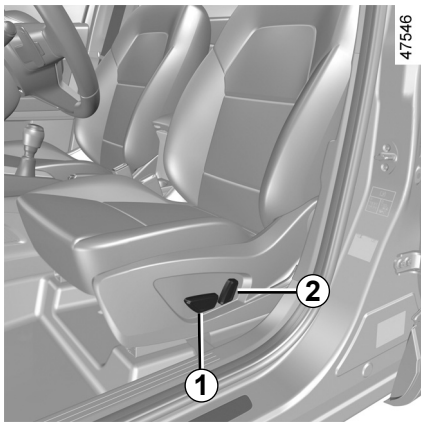

Adjusting the seat position

To move the seat forwards or back

Move the ***1*** switch forwards or backwards or, depending on the vehicle, lift and hold the ***3*** handle to unlock the seat. Release the handle once the seat is in the correct position and ensure that the seat is locked.

To raise or lower the seat base

Move the ***1*** switch up or down or, depending on the vehicle, move the ***4*** lever as many times as necessary upwards or downwards to the desired position.

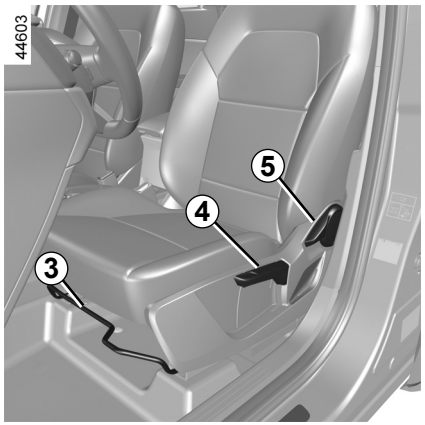

Adjusting the seatback

To tilt the seatback

Activate the ***2*** switch forwards or backwards, or depending on the vehicle, lift the ***5*** handle and tilt the seatback to the desired position. Release the handle at the desired position and make sure that it is locked.

After making adjustments, make sure that the seatbacks are correctly locked in place.

For safety reasons, carry out any adjustments when the vehicle is not being driven.

We would advise you not to recline the seatbacks too far to ensure that the effectiveness of the seat belts is not reduced.

Nothing should be placed on the floor (area in front of driver) as such objects may slide under the pedal during braking manoeuvres, thus obstructing its use.

FRONT SEATS (2/2)

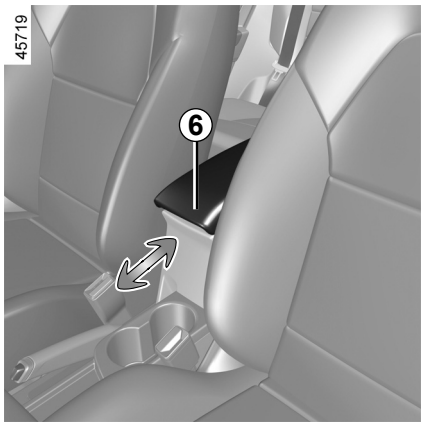

Central armrest *6*

(depending on the vehicle)

To adjust the position of the central armrest ***6***, slide it forwards or backwards.

To adjust the seat's lumbar position

Lower handle ***7*** to increase the support and lift it to decrease it.

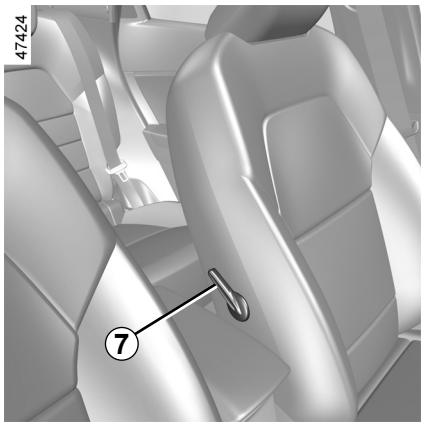

Heated seats

With the ignition on:

– Pressing the switch ***8*** on the required seat for the first time activates the heating system on high. Both integrated switch warning lights come on;

– pressing the switch for the second time changes the heating to low. One integrated warning light comes on;

– pressing for the third time turns the heating off.

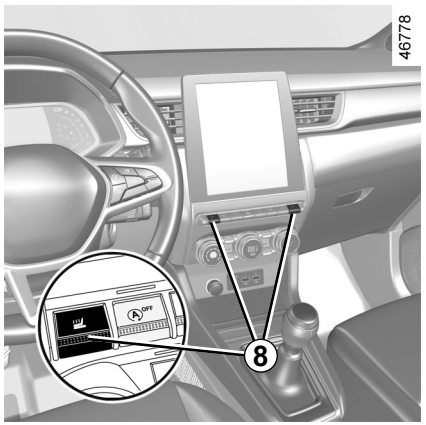

Operating faults

When an operating fault is detected, the warning light of the ***8*** switch for the seat concerned switches-off after approximately five seconds.

Consult an approved dealer.

SEAT BELTS (1/5)

Always wear your seat belt when travelling in your vehicle. You must also comply with the legislation of the particular country you are in.

Before starting, first adjust your driving position, then ask all occupants to adjust their seat belts to ensure optimum protection.

Adjusting your driving position

- **Sit well back in your seat** (having first removed your coat or jacket). This is essential to ensure your back is positioned correctly;
- **adjust the distance between the seat and the pedals.** Your seat should be as far back as possible while still allowing you to fully depress the pedals. The seatback should be adjusted so that your arms are slightly bent when you hold the steering wheel;
- **adjust the position of your headrest.** For maximum safety, your head must be as close as possible to the headrest;
- **adjust the height of the seat.** This adjustment allows you to select the seat position which offers you the best possible view;
- **adjust the position of the steering wheel.**

Make sure that the rear bench seat is locked in position correctly so that the rear seat belts will operate correctly. ➥ 3.34.



Incorrectly adjusted or twisted seat belts may cause injuries in the event of an accident.

Use one seat belt per person, whether child or adult.

Even pregnant women should wear a seat belt. In this case, ensure that the lap belt is not exerting too much pressure on the abdomen, but do not allow any slack.

SEAT BELTS (2/5)

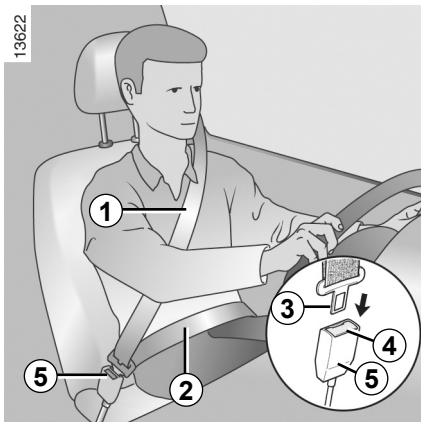

Adjusting the seat belts

For correct adjustment and positioning of the seat belts at all seats:

– adjust the seats (seat position and seatback angle if available);

– sit with your back firmly against the seatback;

– move the shoulder strap ***1*** as close as possible to the base of the neck without it actually resting against it (if necessary, adjust the height of the seat belt if available) and make sure that the chest strap 1 is in contact with the shoulder;

– position the lap belt ***2*** so that it lies flat on the thighs and against the pelvis.

The belt should be worn so that it is as close as possible to your body, i.e.: avoid wearing heavy clothing or keeping bulky objects under the belts, etc.

Locking

Unwind the belt **slowly and smoothly** and ensure that buckle ***3*** locks into catch ***5*** (check that it is locked by pulling on buckle ***3***).

If the belt jams, allow it to return slightly before attempting to unwind it again.

If your seat belt is completely jammed, pull slowly, but firmly, so that just over 3 cm unwinds. Allow it to return slightly before attempting to unwind it again.

If there is still a problem, contact an approved dealer.

Unlocking

Press button ***4*** and the seat belt will be rewound by the inertia reel. Guide the belt.

SEAT BELTS (3/5)

Driver's seat belt reminder and, depending on the vehicle, front passenger seat belt reminder

This appears on the central display when the ignition is switched on and if the driver's and/or front passenger's seat belt(s) (if the passenger seat is occupied) is not fastened. Depending on the vehicle, if the seat is occupied and one of these seat belts is not fastened or becomes unfastened while the vehicle is moving at a speed over approximately 12 mph (20 km/h), the warning light flashes and a beep sounds for approximately 120 seconds.

Note: an object placed on the passenger seat may activate the warning light in some cases, depending on the vehicle.

Rear seat belt reminder (depending on the vehicle)

The ***6*** graphic is displayed on the instrument panel when the ignition is switched on. This informs the driver of the fastening status of each of the rear seat belts every time:

– the ignition is switched on;
– a door is opened;
– fastening or unfastening of a rear seat belt.

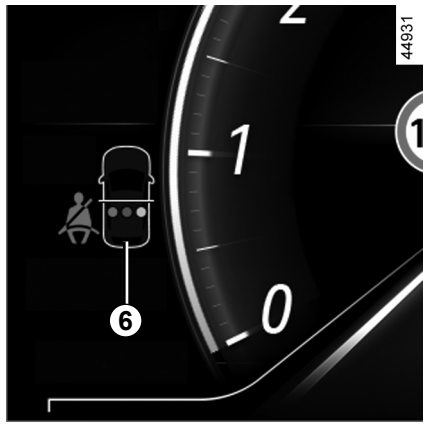

playback of ***6*** **graphic:**

– indicator green: seatbelt fastened;
– indicator in red: the seat is occupied and the seat belt is not fastened;
– indicator grey: seat not occupied.

Depending on the vehicle, the warning light on the central display also appears when the ignition is switched on, if a rear seat is occupied and the seat belt is not fastened. When the vehicle speed is less than approximately 12 mph (20 km/h), the warning light on the central display appears when a rear seat belt is unfastened.

It is accompanied by the ***6*** symbol which appears for approximately 60 seconds each time one of the rear seat belts is fastened or unfastened.

When the vehicle speed reaches or exceeds 12 mph (20 km/h), if one of the rear seat belts is or becomes unfastened during the journey:

– the warning light flashes on the central display;

and

– a beep is emitted for 30 to 120 seconds (depending on the version);

and

– the ***6*** symbol is displayed for at least approximately 60 seconds and the symbol for the seat concerned changes to red.

Always make sure that the rear passengers are properly fastened and that the number of fastened seat belts indicated corresponds to the number of rear seats occupied.

Note: in some cases the alerts may be activated if an object is placed on one of the rear seats, depending on the vehicle.

SEAT BELTS (4/5)



Adjusting the height of the front seat belts

Use button ***7*** to adjust the seat belt height so that the shoulder strap is worn as shown previously. Press the button ***7*** and raise or lower the seat belt. Make sure that the seat belt is locked in position correctly after you have adjusted it.

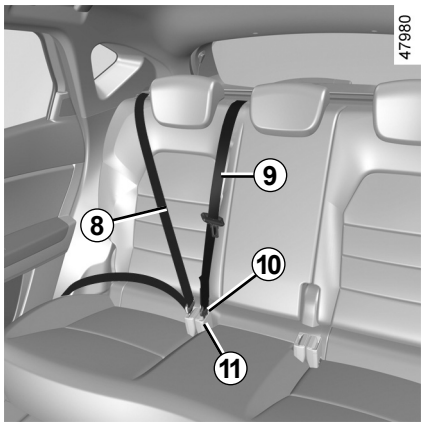

Rear side seat belts *8*

The belts are locked, unlocked and adjusted in the same way as the front belts.

Check that the rear seat belts are positioned and operating correctly each time the rear bench seat is moved.

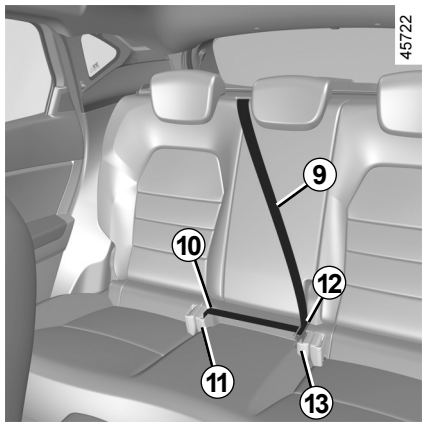

Rear centre seat belt

Slowly unwind belt ***9***.

Click buckle ***10*** into black catch ***11***.

Fasten the tongue ***12*** in the red buckle ***13***.

Ensure that you always leave the tongue ***10*** fastened in the buckle ***11*** even if no passenger is present in the centre seat.

SEAT BELTS (5/5)

The following information applies to the vehicle's front and rear seat belts.

– No modification may be made to the component parts of the restraint system – belts and seats and their mountings – fitted originally. For special operations (e.g. fitting child seats) contact an approved dealer.

– Do not use devices which allow any slack in the belts (e.g. clothes pegs, clips, etc.): a seat belt which is worn too loosely may cause injury in the event of an accident.

– Never wear the shoulder strap under your arm or behind your back.

– Never use the same belt for more than one person and never hold a baby or child on your lap with your seat belt around them.

– The belt should never be twisted.

– Following an accident, have the seat belts checked and replaced if necessary. Always replace your seat belts as soon as they show any signs of wear.

– When the rear bench seat is being put back, make sure that the seat belts and buckles are correctly positioned so that they can be used properly.

– Make sure that the buckle is inserted into the appropriate catch.

– Ensure that no objects are placed in the area around the seat belt catch as they could prevent it from being properly secured.

– Make sure the seat belt catch is properly positioned (it should not be hidden away, crushed or flattened by people or objects).

METHODS OF RESTRAINT IN ADDITION TO THE FRONT SEAT BELTS (1/6)

Depending on the vehicle, they will consist of:

- **seat belt inertia reel pretensioners;**
- **central seat belt pretensioners;**
- **chest-level load limiters;**
- **airbags driver and passenger front.**

These systems are designed to act independently or together when the vehicle is subjected to a frontal impact.

Depending on the severity of the impact, the system can trigger:

- seat belt locking;
- the seat belt inertia reel pretensioner (which engages to correct seat belt slack);
- lap seat belt pretensioners to hold the occupant in their seat;
- the front airbag.

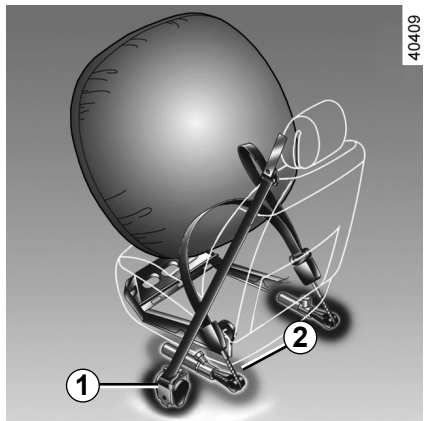

Pretensioners

The pretensioners hold the seat belt against the body, holding the occupant more securely against the seat, thus increasing the seat belt's efficiency.

In the event of a severe frontal impact and if the ignition is switched on, the system may engage the following depending on the force of the impact:

- the seat belt inertia reel pretensioner ***1*** which instantly retracts the seat belt;
- the lap seat belt inertia reel pretensioner ***2*** on the front seats.

– Have the entire restraint system checked following an accident.

– No operation whatsoever is permitted on any part of the system (pretensioners, airbags, computers, wiring) and the system components must not be reused on any other vehicle, even if identical.

- Only qualified personnel from our Network may work on the airbags; otherwise the system may trigger accidentally and cause injury.
- The electric trigger system may only be tested by a specially trained technician using special equipment.
- When the vehicle is scrapped, contact an approved dealer for disposal of the pretensioner and airbags gas generators.

METHODS OF RESTRAINT IN ADDITION TO THE FRONT SEAT BELTS (2/6)

Load limiter

Above a certain severity of impact, this mechanism is used to limit the force of the belt against the body so that it is at an acceptable level.

driver and passenger front Airbags

Fitted to the driver and passenger sides.

A symbol on the lower section of the windscreen indicates if this equipment is present (depending on the vehicle).

Each airbag system consists of:

– an airbag and gas generator fitted on the steering wheel for the driver and in the dashboard for the passenger;

– an electronic unit for system monitoring which controls the gas generator electrical trigger system;

– remote sensors;

– a single warning light  on the instrument panel.

The airbag system uses pyrotechnic principles. This explains why, when the airbag inflates, it will generate heat, produce smoke (this does not mean that a fire is about to start) and make a banging noise. In a situation where an airbag is required, it will inflate immediately and this may cause some minor, superficial grazing to the skin or other problems.

METHODS OF RESTRAINT IN ADDITION TO THE FRONT SEAT BELTS (3/6)

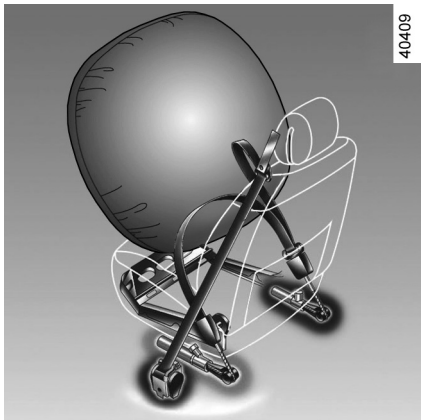

Operation

This system is only operational when the ignition is switched on.

In a severe frontal impact, the airbags inflate rapidly, cushioning the impact of the driver's head and chest against the steering wheel and of the front passenger against the dashboard. The air bags then deflate immediately so that the passengers are not in any way hindered from leaving the vehicle.

Operating faults

 This warning light comes on when the engine is started and then goes out after approximately three seconds.

If it does not come on when the ignition is switched on or if it stays on, there is a fault in the system.

Contact your approved Dealer as soon as possible.

Your protection will be reduced until this fault is rectified.

METHODS OF RESTRAINT IN ADDITION TO THE FRONT SEAT BELTS (4/6)

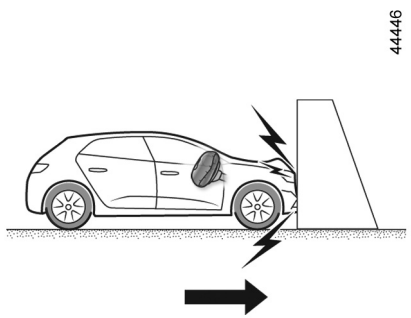

The following conditions will trigger the pretensioners or airbags.

In a frontal impact against a rigid (non-deformable) surface at an impact speed equal to or greater than **16 mph (25 km/h)**.

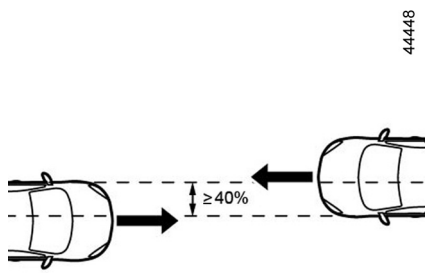

In a frontal impact with another vehicle of an equivalent or higher category, with an impact area equal to or greater than 40%, where the speed of both vehicles is equal to or greater than **25 mph (40 km/h)**.

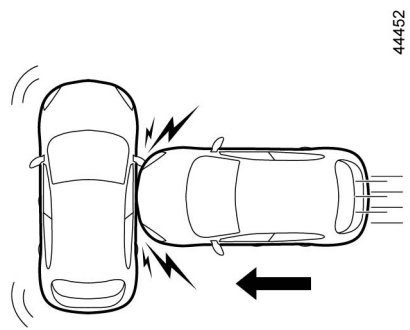

In a side impact with another vehicle of an equivalent or higher category, at an impact speed equal to or greater than **31 mph (50 km/h)**.

METHODS OF RESTRAINT IN ADDITION TO THE FRONT SEAT BELTS (5/6)

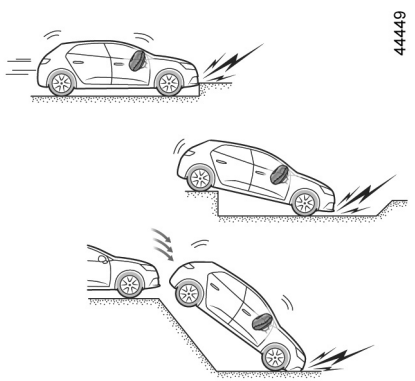

In the following examples, the pretensioners or the airbags could operate:

– impact under vehicle such as pavement;

– potholes;

– drop or hard landing;

– stones;

– ...

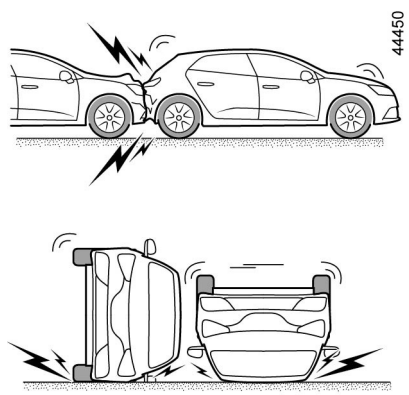

In the following examples, there is a risk that pretensioners or**airbags may not be triggered:**

– rear impact, however severe;

– the vehicle overturning;

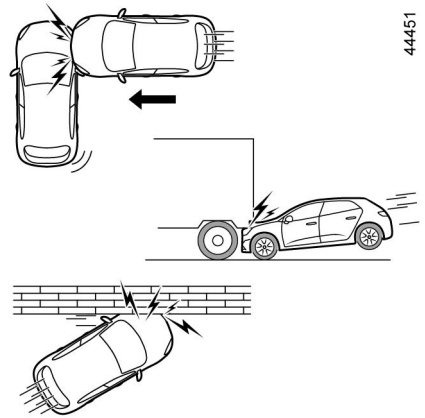

– side impact to the front or rear of the vehicle;

– frontal impact, under the tail of a lorry;

– frontal impact against an obstacle with a sharp angle;

– ...

METHODS OF RESTRAINT IN ADDITION TO THE FRONT SEAT BELTS (6/6)

All of the warnings below are given so that the airbag is not obstructed in any way when it is inflated and also to prevent the risk of serious injuries caused by items which may be dislodged when it inflates.



Warnings concerning the driver's airbag

– Do not modify the steering wheel or the steering wheel boss.

– Do not cover the steering wheel boss under any circumstances.

– Do not attach any objects (badge, logo, clock, telephone holder, etc.) to the steering wheel boss.

– The steering wheel must not be removed (except by qualified personnel from our Network).

– Do not sit too close to the steering wheel when driving: sit with your arms slightly bent (see "Adjusting your driving position" ➥ 1.23). This will allow sufficient space for the airbag to deploy correctly and be fully effective.

Warnings concerning the passenger airbag

– Do not attach or glue any objects (badge, logo, clock, telephone holder, etc.) to the dashboard on or near the **airbag**.

– Do not place anything between the dashboard and the passenger (pet, umbrella, walking stick, parcels, etc.).

– The passenger must not put his or her feet on the dashboard or seat as there is a risk that serious injuries may occur. In general, parts of the body should be kept away from the dashboard (knees, hands, head, etc.).

– The devices in addition to the front passenger seat belt should be reactivated as soon as a child seat is removed, to ensure the protection of the passenger in the event of an impact.

A REAR-FACING CHILD SEAT MUST NOT BE FITTED TO THE FRONT PASSENGER SEAT UNLESS THE RESTRAINT SYSTEMS IN ADDITION TO THE FRONT PASSENGER SEATBELT ARE DEACTIVATED ➥ 1.51.

METHODS OF RESTRAINT IN ADDITION TO THE REAR SEAT BELTS

Depending on the vehicle, they will consist of:

– **side seat belt inertia reel pretensioners**;

– **chest force limiters.**

These systems are designed to act independently or together when the vehicle is subjected to a frontal impact.

Depending on the severity of the impact, the system can trigger:

– seat belt locking;

– the seat belt inertia reel pretensioner (which engages to correct seat belt slack).

Force limiter

Above a certain severity of impact, this mechanism is used to limit the force of the belt against the body so that it is at an acceptable level.

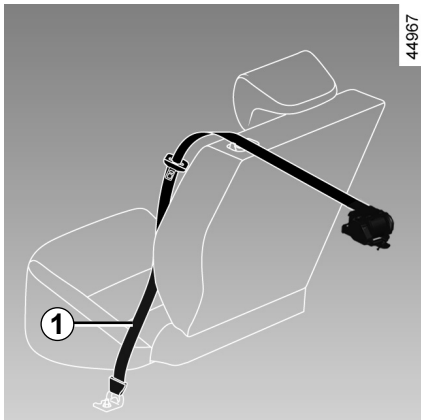

Side seat belt pretensioners

The pretensioners hold the seat belt against the body, holding the occupant more securely against the seat, thus increasing the seat belt's efficiency.

With the ignition on, following a significant frontal impact and depending on the severity of the impact, the system may trigger the seat belt inertia reel pretensioner ***1***, which instantly retracts the seat belt.

– Have the entire restraint system checked following an accident.

– No operation whatsoever is permitted on any part of the system (pretensioners, airbags, computers, wiring) and the system components must not be reused on any other vehicle, even if identical.

– Only qualified personnel from our Network may work on the airbags; otherwise the system may trigger accidentally and cause injury.

– The electric trigger system may only be tested by a specially trained technician using special equipment.

– When the vehicle is scrapped, contact an approved dealer for disposal of the pretensioner and airbags gas generators.

SIDE PROTECTION DEVICES

Side Airbag

This airbag may be fitted to each of the front seats and is activated at the sides of the seats (door side) to protect the occupants in the event of a severe side impact.

Curtain Airbag

This is an airbag fitted (depending on the vehicle) along the upper sides of the vehicle – they inflate along the front and rear door side windows to protect the passengers in the event of a severe side impact.

Warning relating to the side airbag

– **Fitting seat covers:** seats equipped with an airbag require covers specifically designed for your vehicle. Contact an approved dealer to find out if these covers are available. The use of any covers other than those designed for your vehicle (including those designed for another vehicle) may affect the operation of the airbag and reduce your protection.

– Do not place any accessories, objects or even pets between the seatback, the door and the internal fittings. Do not cover the seatback with any items such as clothes or accessories. This may prevent the air bag from operating correctly or cause injury when the airbag is deployed.

– No work or modification whatsoever may be carried out on the seat or internal fittings, except by qualified personnel from an approved Dealer.

– This airbag operates through slits in the front seatbacks (door side): never insert any objects in these slits.

ADDITIONAL METHODS OF RESTRAINT

All of the warnings below are given so that the airbag is not obstructed in any way when it is inflated and also to prevent the risk of serious injuries caused by items which may be dislodged when it inflates.

The airbag is designed to complement the action of the seat belt. Both the airbag and the seat belt are integral parts of the same protection system. It is therefore essential to wear seat belts at all times. If seat belts are not worn, the occupants are exposed to the risk of serious injury in the event of an accident. It may also increase the risk of minor superficial injuries occurring when the airbag is deployed, although such minor injuries are always possible with airbags.

If the vehicle should overturn or in the event of a rear impact, however severe, the pretensioners and airbags are not always triggered. Impacts to the underside of the vehicle, e.g. from pavements, potholes or stones, can all trigger these systems.

– No work or modification **whatsoever** may be carried out on any part of the airbag system (airbags, pretensioners, computer, wiring harness, etc.), except by qualified Network personnel.

– To ensure that the system is in good working order and to avoid accidental triggering of the system which may cause injury, only qualified Network personnel may work on the airbag system.

– As a safety precaution, have the airbag system checked if your vehicle has been involved in an accident, or is stolen or broken into.

– When selling or lending the vehicle, inform the user of these points and hand over this handbook with the vehicle.

– When scrapping your vehicle, contact your approved Dealer for disposal of the gas generator(s).

CHILD SAFETY: General information (1/2)

Carrying children

Please ensure that you comply with the legislation of your country.

Children, and adults, must be correctly seated and strapped in for all journeys. The children being carried in your vehicle are your responsibility.

A child is not a miniature adult. Children are at risk of specific injuries as their muscles and bones have not yet finished growing. The seat belt alone would not provide suitable protection. Use an approved child seat and ensure you use it correctly.

To prevent the doors being opened, use the “Child lock” feature. ➥ 1.14.

A collision at 31 mph (50 km/h) is the same as falling a distance of 10 metres.

Transporting a child without a restraint is the equivalent of allowing him or her to play on a fourth-floor balcony without railings.

Never travel with a child held in your arms.

In the event of an accident, you will not be able to keep hold of the child, even if you yourself are wearing a seat belt.

If your vehicle has been involved in a road accident, replace the child seat and have the seat belts and ISOFIX anchorage points checked.

Driver’s responsibility when parking or stopping the vehicle

Never leave an animal, child or adult who is not self-sufficient alone on your vehicle, even for a short time.

They may pose a risk to themselves or to others by starting the engine, activating equipment such as the electric windows or by locking the doors.

Also, in hot and/or sunny weather, please remember that the temperature inside the passenger compartment increases very quickly.

RISK OF DEATH OR SERIOUS INJURY.

CHILD SAFETY: General information (2/2)

Using a child seat

The level of protection offered by the child seat depends on its ability to restrain your child and on its installation. Incorrect installation compromises the protection it offers the child in the event of harsh braking or an impact.

Before purchasing a child seat, check that it complies with the regulations for the country you are in and that it can be fitted in your vehicle. Consult an approved dealer to find out which seats are recommended for your vehicle.

The regulations on transporting children are specific to each country. The use of a child seat during transport depends on the age and/or the size and/or weight of the child.

For children who do not need to be transported in a child seat, make sure that the seat belt is correctly adjusted and fastened.

In all cases, you must comply with the regulations of the particular country you are in.

Before fitting a child seat, read the manual and respect its instructions. If you experience any difficulties during installation, contact the manufacturer of the equipment. Keep the instructions with the seat.

Set a good example by always fastening your seat belt and teaching your child:

– to strap themselves in correctly;

– to always get in and out of the car at the kerb, away from busy traffic.

Do not use a second-hand child seat or one without an instruction manual.

Check that there are no objects in the vicinity of the child seat which could impede its operation.



Never leave a child unattended in the vehicle.

Check that your child is always strapped in and that the belt or safety harness used is correctly set and adjusted. Avoid wearing bulky clothing which could cause the belts to slacken ➥ 1.23.

Never let your child put their head or arms out of the window.

Check that the child is in the correct position for the entire journey, especially if asleep.

OVSE23E2

CHILD SAFETY: choosing a child seat

31235

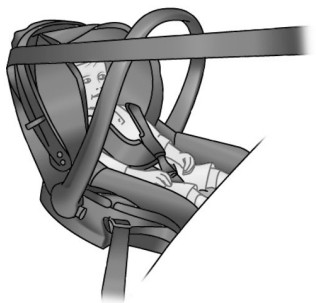

Rear-facing child seats

A baby's head is, proportionally, heavier than that of an adult and its neck is very fragile. Transport the child in this position for as long as possible (until the age of 2 at the very least). It supports both the head and the neck.

Choose a bucket type seat for best side protection and change it as soon as the child's head is higher than the shell.

38824



Forward-facing child seats

Up to 18 kg or 4 years, the child may travel on a forward-facing seat. Choose a seat according the child's size: their head and abdomen are the areas which must be most protected. A forward-facing child seat which is firmly attached to the vehicle will reduce the risk of impact to the head. Ensure your child travels in a forward-facing seat with a harness for as long as their size permits.

Choose a bucket type seat for optimum side protection.

31234



Booster cushions

From 15 kg or 4 years, the child can travel using a booster seat, which will enable the seat belt to be adapted to suit his/her size and shape. The booster seat cushion must be fitted with guides to position the seat belt on the child's thighs rather than the stomach. It is recommended that you use a seat-back fitted with a belt strap guide which can be adjusted in terms of height to position the seat belt in the centre of the shoulder. It must never rest on the neck or on the arm.

Choose a bucket type seat for optimum side protection.

CHILD SAFETY: choosing a child seat mounting (1/3)

There are two ways of attaching child seats: via the seat belt or using the ISOFIX system.

Attachment via the seat belt

The seat belt must be adjusted to ensure that it is effective in the event of harsh braking or an impact.

Ensure that the strap paths indicated by the child seat manufacturer are respected.

Always check that the seat belt is correctly fastened by pulling it up, then pulling it out fully whilst pressing on the child seat.

Check that the seat is correctly held by moving it from side to side and back to front: the seat should remain firmly fixed.

Check that the child seat has not been installed at an angle and that it is not resting against a window.

Do not use the child seat if it may unfasten the seat belt restraining it: the base of the seat must not rest on the buckle and/or catch of the seat belt.

The seat belt must never be twisted or the tension relieved. Never pass the shoulder strap under the arm or behind the back.
Check that the seat belt has not been damaged by sharp edges.
If the seat belt does not operate normally, it will not protect the child. Consult an approved dealer. Do not use this seat until the seat belt has been repaired.

OVSE23E2

CHILD SAFETY: choosing a child seat mounting (2/3)

Attachment using the ISOFIX system

Approved child seats ISOFIX are standardised in accordance with current regulations if any of the four cases below applies:
– ISOFIXuniversal 3-point forward-facing seat;
– ISOFIXsemi-universal 2-point seat;
– specific;
– i-Size which has either:
  – a strap which attaches to the third ring of the seat concerned;
  – or a strut that rests on the vehicle floor, compatible with the approved seat i-Size, the role of which is to prevent the child seat from moving in the event of a collision.

In the latter three cases check that your child seat can be installed by consulting the list of compatible vehicles.

Attach the child seat with the ISOFIX locks, if these are provided. The ISOFIX system allows quick, easy, safe fitting.

The ISOFIX system consists of 2 rings and, in some cases, a third ring.

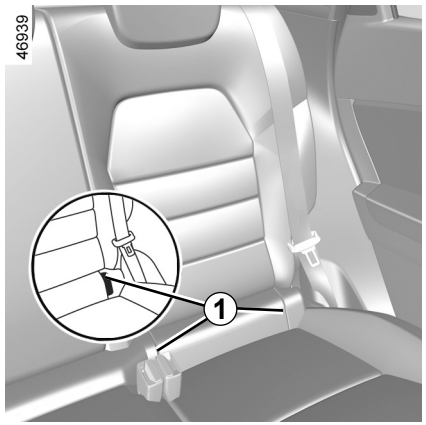

The two rings are located behind the zip fasteners ***1*** between the seat back and seat base and are identified by a marking.

The ISOFIX anchorage points have been exclusively designed for child seats with the ISOFIX system. Never fit a different type of child seat, seat belt or other objects to these anchorage points.
Check that nothing is obstructing the anchorage points.
If your vehicle has been involved in a road accident, have the ISOFIX anchorage points checked and replace your child seat.

No modifications may be made to the component parts of the restraint system (seat belts, ISOFIX and seats and their mountings) originally fitted.

Before using an ISOFIX child seat that you purchased for another vehicle, check that its installation is authorised. Consult the list of vehicles which can be fitted with the seat from the equipment manufacturer.

CHILD SAFETY: choosing a child seat mounting (3/3)

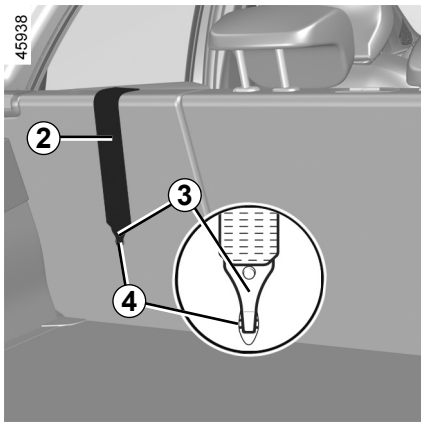

Attachment using the ISOFIX system (continued)

The third ring ***4*** is used to attach the upper strap ***2*** on some child seats.

Rear seats

The upper strap ***2*** should be positioned between the seatback and the rear parcel shelf. To do so, remove the rear parcel shelf ➥ 3.37.
Attach the ***3*** hook on one of the ***4*** rings marked with the symbol.

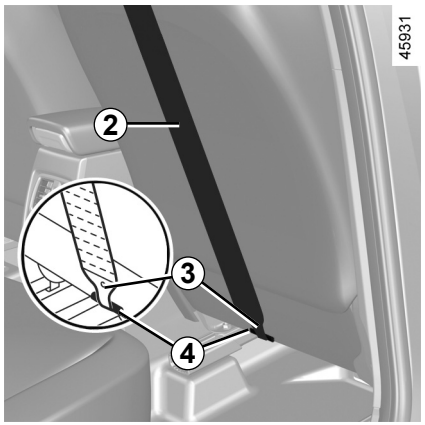

Front passenger seat

Attach the ***3*** hook of the upper strap ***2*** to the ring ***4*** marked with the symbol.

All seats

Pull the upper strap ***2*** so that the back of the child seat comes into contact with the back of the vehicle seat.

The ISOFIX anchorage points have been exclusively designed for child seats with the ISOFIX system. Never fit a different type of child seat, seat belt or other objects to these anchorage points.
Check that nothing is obstructing the anchorage points.
If your vehicle has been involved in a road accident, have the ISOFIX anchorage points checked and replace your child seat.

Check that the seatback of the forward-facing child seat is in contact with the back of the vehicle seat. In this case, the child seat may not always rest on the base of the vehicle seat.

CHILD SAFETY: fitting a child seat, general information (1/2)

Some seats are not suitable for fitting child seats. The diagram on the following page shows you how to attach a child seat.

Fit the child seat in a rear seat wherever possible.

Make sure the child seat or the child's feet do not prevent the front seat from locking correctly. ➥ 1.21.

Check that when installing the child seat in the vehicle it is not at risk of coming loose from its base.

If you have to remove the headrest, check that it is correctly stored so that it does not come loose under harsh braking or impact.

Always attach the child seat to the vehicle even if it is not in use so that it does not come loose under harsh braking or impact.

The types of child seat indicated may not be available. Before using a different child seat, check with the manufacturer that it can be fitted.

In the front seat

The laws concerning children travelling in the front passenger seat differ in every country. Consult the legislation in force and follow the indications on the diagram on the following page.

Before fitting a child seat in this seat (if authorised):

– lower the seat belt as far as possible;

– move the seat as far back as possible;

– gently tilt the seatback away from vertical (approximately 25°);

– on equipped vehicles, raise the seat base as far as possible.

Always fully raise the seat headrest so that it does not interfere with the child seat ➥ 1.89.

After installing the child seat, when this is possible, you can move the vehicle seat forward if necessary (so as to leave enough space in the rear seats for passengers or other child seats). For a rear-facing child seat, do not let it touch the dashboard or move it to the furthest forward position.

Do not change other settings after installing the child seat.

RISK OF DEATH OR SERIOUS INJURY: before fitting a rear-facing child seat in this seat, make sure that the front passenger airbag has been deactivated. ➥ 1.51.

OVSE23E2

CHILD SAFETY: fitting a child seat, general information (2/2)

In the rear side seat

A carrycot can be installed across the vehicle and will take up at least two seats. Position the child with his or her feet nearest the door.

Move the front seat as far forward as possible to install a rear-facing child seat, then move back the seat in front as far as it will go, although without allowing it to come into contact with the child seat.

For the safety of the child in the forward-facing position:
– move the relevant seat backwards as far as possible;
– move the seat in front of the child forwards, and set the position of the seatback to avoid contact between the seat and the child's legs.

Ensure that the child seat or the child's feet do not prevent the front seat from locking correctly. ➥ 3.34 or ➥ 1.21.

Always remove the headrest from the rear seat on which the child seat is positioned. ➥ 3.33. If necessary, position the rear seat as far back as possible. This must be done before fitting the child seat. Check that the child seat is resting against the back of the rear seat.

Installing a booster seat (group 2 or 3)

Check the operation (rolling up) of the seat belt ➥ 1.23.

Adjust the seat belt by positioning:

– the shoulder strap on the child's shoulder without touching the neck;

– the lap belt so that it lies flat on the thighs and against the pelvis.

If necessary, adjust the position of the vehicle seat.

A child seat with floor supports must never be installed on the rear centre seat.

RISK OF DEATH OR SERIOUS INJURY.

Fit the child seat in a rear seat wherever possible.

To install an ISOFIX seat in this seat, unbuckle the seat belt by hand before engaging the bolts.

Fitting a seat ISOFIX in the rear-left seat means the middle seat cannot be used. The central seat belt will no longer be either accessible or useable.

OVSE23E2

CHILD SEATS: attachment by seat belt (1/3)

Fitting diagram

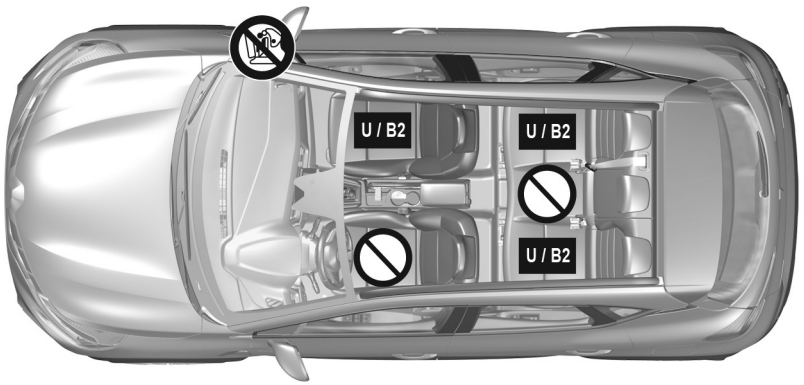

59985

Check the status of the airbag before fitting a child seat or allowing a passenger to use the seat.

Seat not suitable for fitting child seats.

Child seat attached using the belt

U Seat which allows a child seat with “Universal” approval to be attached by a seat belt.

B2: Seat enabling a child seat with “B2“ approval to be attached by seat belt.

RISK OF DEATH OR SERIOUS INJURY: before fitting a rear-facing child seat in this seat, make sure that the front passenger airbag has been deactivated. ➥ 1.51.

Using a child safety system which is not approved for this vehicle will not correctly protect the baby or child. They risk serious or even fatal injury.

Check that your child is always strapped in and that the belt or safety harness used is correctly set and adjusted ➥ 1.23.

If necessary, adjust the seat position accordingly.

OVSE23E2

CHILD SEATS: attachment by seat belt (2/3)

The table below summarises the information already shown on the diagram on the previous page, to ensure the regulations in force are respected.

Five-seater version					
Type of child seat	**Weight of the child**	**Front passenger seat**		**Rear side seats**	**Rear centre seat**
		With airbag disabled	**With airbag activated**		
Carrycot fitted across the vehicle Group 0	< 10 kg	X	X	U (2)	X
Rear-facing shell seat Groups 0 or 0 +	< 10 kg and < 13 kg	U (1) (5)	X	U (3)	X
Shell seat/rear-facing seat Groups 0+ and 1	< 13 kg and 9 to 18 kg	U (1) (5)	X	U (3)	X
Forward-facing seat Group 1	9 to 18 kg	X	U (5)	U (4)	X
Booster seat Groups 2 and 3	15 to 25 kg and 22 to 36 kg	X	U B2 (5)	U B2 (4)	X

(1) RISK OF DEATH OR SERIOUS INJURY: before fitting a rear-facing child seat in this seat, make sure that the front passenger airbag has been deactivated. ➥ 1.51.

CHILD SEATS: attachment by seat belt (3/3)

X = Seat not suitable for fitting child seats of this type.

U = Seat which allows a child seat with “Universal” approval to be installed using a seat belt; check that it can be fitted.

B2 = Boosters in groups 2 and 3 (15 to 25 kg and 22 to 36 kg).

(2) A carrycot can be installed across the vehicle and will take up at least two seats. Position the child with his or her feet nearest the door.

(3) If necessary, position the vehicle seat as far back as possible. In order to install a rear-facing child seat, move the front seat as far forward as possible, then move the front seat back as far as it will go, without allowing it to come into contact with the child seat.

(4) In all situations, remove the rear headrest of the seat on which the child seat is positioned. This must be done before fitting the child seat. ➥ 3.33. Move the seat in front of the child forwards, move the seatback forward to avoid contact between the seat and the child’s legs.

(5) Raise the seat to the maximum and position it as far back as possible, tilting the seatback slightly (approximately 25°).

CHILD SEATS: fitted using the ISOFIX SYSTEM (1/3)

The table below summarises the information already shown in the diagram on the following pages, to ensure the applicable regulations are respected.

Type of child seat	Weight of the child	Seat size ISOFIX	Front passenger seat		Rear side seats	Rear centre seat
			Without airbag or with airbag deactivated	With airbag activated		
Carrycot fitted across the vehicle Group 0	< 10 kg	L1 [F] L2 [G]	X	X	X	X
Rear-facing shell seat Groups 0 or 0 +	< 13 kg	R1 [E]	IL (1) (4)	X	IL (2)	X
Shell seat/rear-facing seat Groups 0+ and 1	< 13 kg and 9 to 18 kg	R3 [C] R2 [D]	IL (1) (4)	X	IL (2)	X
Forward-facing seat Group 1	9 to 18 kg	F3 [A] F2 [B] F2X [B1]	X	IUF - IL (1)	IUF - IL (2) (3)	X
Booster seat Groups 2 and 3	15 to 25 kg and 22 to 36 kg	B2	X	IUF - IL (1)	IUF - IL (2) (3)	X

Seat i-Size			i-U (1) (4)	i-UF (1)	i-U (2) (3)	X

CHILD SEATS: fitted using the ISOFIX SYSTEM (2/3)

X = Seat not suitable for fitting child seats of this type.

IUF/IL = On equipped vehicles, seat which allows an approved “Universal/semi-universal” or “vehicle specific” child seat to be attached using the ISOFIX system; check that it can be fitted.

i-U = Suitable for “universal” front-facing and rear-facing i-Size restraint devices.

i-UF = Suitable only for “universal” front-facing and rear-facing i-Size restraint devices.

(1) Raise the seat to the maximum and position it as far back as possible, tilting the seatback slightly (approximately 25°).

(2) If necessary, position the vehicle seat as far back as possible. In order to install a rear-facing child seat, move the front seat as far forward as possible, then move the front seat back as far as it will go, without allowing it to come into contact with the child seat.

(3) In all situations, remove the rear headrest of the seat on which the child seat is positioned. This must be done before fitting the child seat. ➥ 3.33. Move the seat in front of the child forwards, move the seatback forward to avoid contact between the seat and the child’s legs.

The size of the ISOFIX child seat is indicated by a letter:

– F3, F2, F2X [A, B, B1]: for front-facing seats of group 1 (from 9 to 18 kg);

– R3, R2 [C, D]: rear-facing shell seats or seats of group 0+ (below 13 kg) or of group 1 (from 9 to 18 kg);

– R1 [E]: rear-facing shell seats of group 0 (below 10 kg) or 0+ (below 13 kg);

– L1, L2 [F, G]: carrycots of group 0 (below 10 kg);

– [[B2]]: boosters in groups 2 and 3 (15 to 25 kg and 22 to 36 kg).

(4) RISK OF DEATH OR SERIOUS INJURY: before fitting a rear-facing child seat in this seat, make sure that the front passenger airbag has been deactivated. ➥ 1.51

CHILD SEATS: fitted using the ISOFIX SYSTEM (3/3)

Fitting diagram

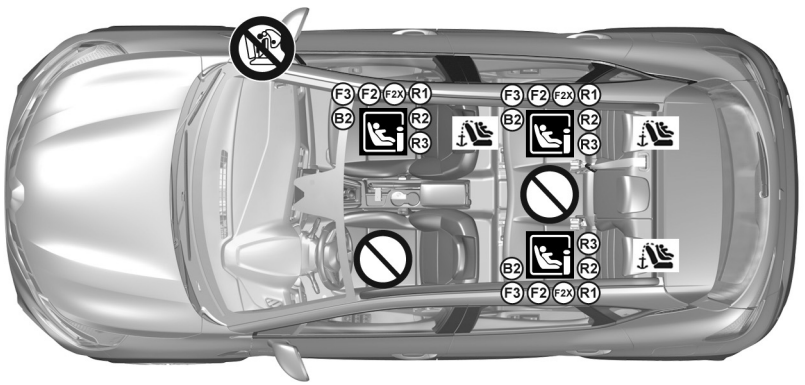

For the front passenger seat, the use of a child seat with a floor support is recommended to avoid triggering the seat belt warning signal.

Using a child safety system which is not approved for this vehicle will not correctly protect the baby or child. They risk serious or even fatal injury.

Seat which does not allow a child seat to be fitted.

RISK OF DEATH OR SERIOUS INJURY: before fitting a rear facing child seat on the front passenger seat, check that the airbag has been deactivated ➥ 1.51.

Child seat fitted using the ISOFIX mounting

Seat which allows an ISOFIX child seat to be fitted.

The rear seats are fitted with an anchorage point which allows a forward-facing ISOFIX child seat with universal approval to be attached. The anchoring points are located on the passenger seatback for the front seat and on the bench seatback for the rear seats.

Fit the child seat in a rear seat wherever possible.

To install an ISOFIX seat in this seat, unbuckle the seat belt by hand before engaging the bolts.

Fitting a seat ISOFIX in the rear-left seat means the middle seat cannot be used. The central seat belt will no longer be either accessible or useable.

CHILD SAFETY: deactivating, activating AIRBAG front passenger (1/3)

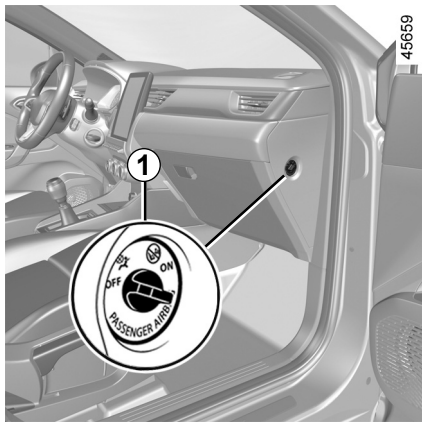

Deactivating the front passenger airbag

Before installing a child seat on the front passenger seat:

– check that the child seat can be installed on this seat;

– it is essential **to deactivate** the airbagfor a rear-facing child seat.



To deactivate the airbag: with the vehicle stationary and the ignition switched off, push and turn lock ***1*** to the **OFF** position.

When the ignition is switched on, it is **essential** to check that the warning light is illuminated on the display ***2***.

This light remains permanently lit to let you know that you can fit a child seat.

The passenger airbag may only be activated or deactivated when the **vehicle is stationary**, **with the ignition off.**

If it is interfered with when the vehicle is being driven, indicator lights and will come on.

Switch the ignition off then on again to reset the airbag in accordance with the lock position.

DANGER

Since operation of the front passenger airbag is not compatible with the position of a rear-facing child seat, **NEVER** fit a rear-facing child restraint system in a seat protected by an ACTIVATED front **AIRBAG**. This can lead to the **DEATH** of the **CHILD** or **SERIOUS INJURY**.

CHILD SAFETY: deactivating, activating AIRBAG front passenger (2/3)

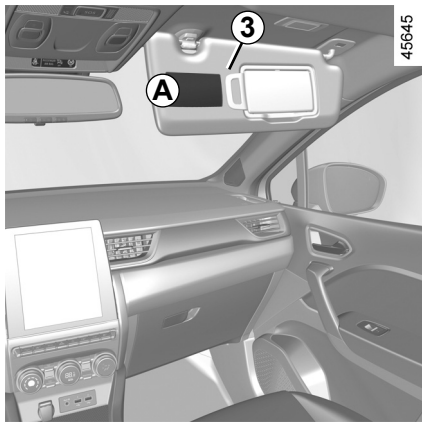



The markings on the dashboard and labels ***A*** on each side of the passenger sun visor ***3*** (example: label shown above) remind you of these instructions.

DANGER

Since operation of the front passenger airbag is not compatible with the position of a rear-facing child seat, **NEVER** fit a rear-facing child restraint system in a seat protected by an ACTIVATED front **AIRBAG**. This can lead to the **DEATH** of the **CHILD** or **SERIOUS INJURY**.

CHILD SAFETY: deactivating, activating AIRBAG front passenger (3/3)

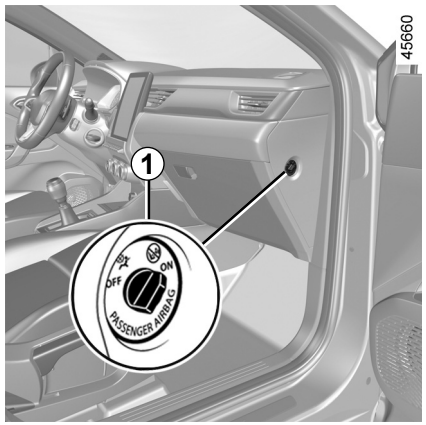

Activating the front passenger airbag

You should reactivate the airbag as soon as you remove the child seat from the front passenger seat to ensure the protection of the front passenger in the event of an impact.



To restart the airbag: vehicle stopped, **ignition switched off,** press and turn the lock to ***1*** position **ON**.

When the ignition is switched on, you **must** check that the warning light is off and that the warning light lights up on the display ***2*** after each start-up for around 1 minute.

The front passenger airbag is activated.

Operating faults

It is forbidden to fit a rear-facing child seat to the front passenger seat if the airbag activation/deactivation system is faulty.

Allowing any other passenger to sit in that seat is not recommended.

Contact your approved dealer as soon as possible.

The passenger airbag may only be activated or deactivated when the **vehicle is stationary with the ignition off**.

If it is interfered with when the vehicle is being driven, indicator lights and will come on.

Switch the ignition off then on again to reset the airbag in accordance with the lock position.

DRIVING POSITION: LEFT-HAND DRIVE (1/2)

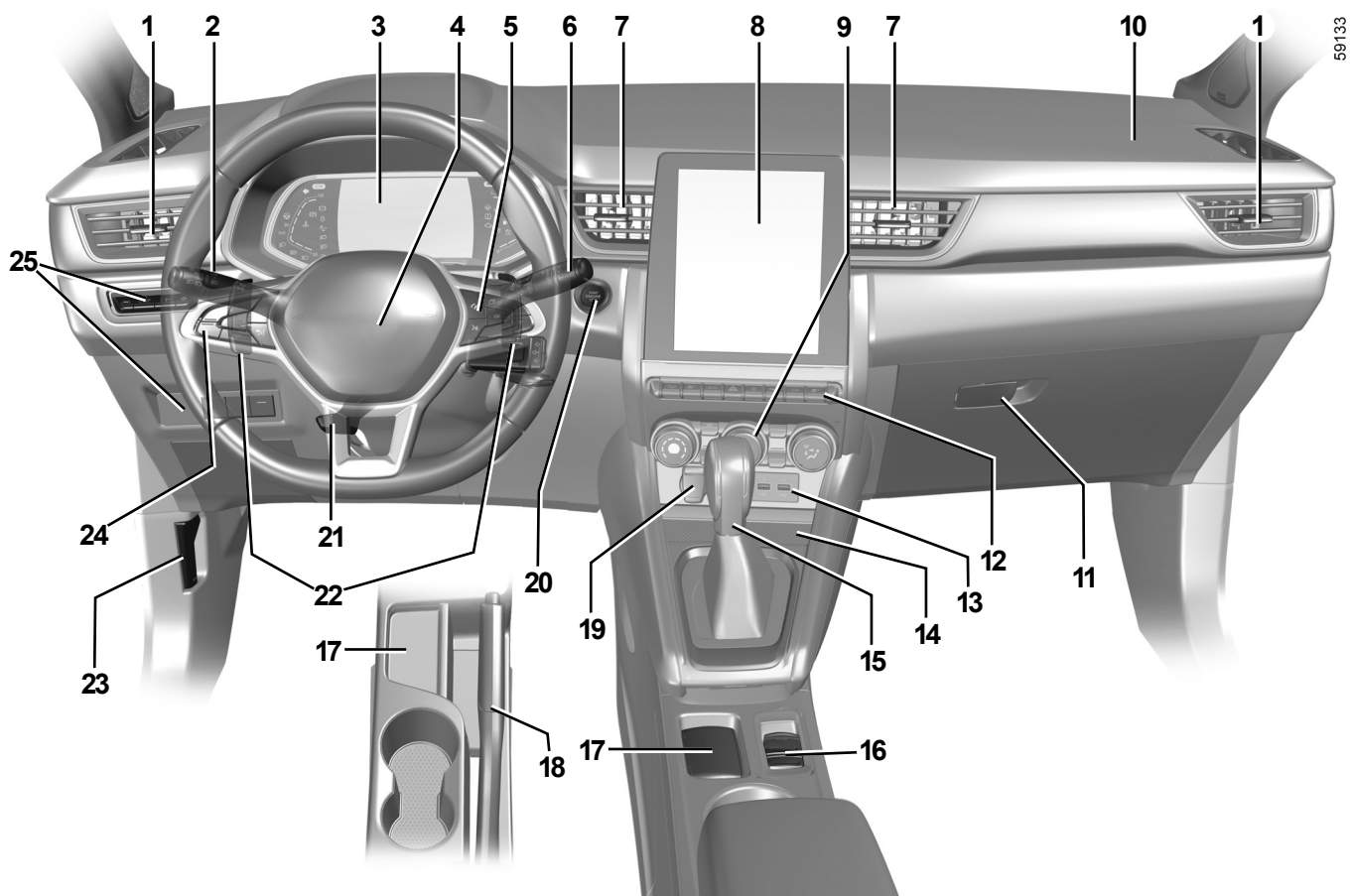

OVSE23E2

DRIVING POSITION: LEFT-HAND DRIVE (2/2)

The equipment fitted, described below, DEPENDS ON THE VERSION AND COUNTRY.

1 Side air vents.
2 Stalk for:
- direction indicator lights;
- exterior lights;
- rear fog lights.

3 Instrument panel.
4 Driver airbag and horn location.
5 Controls for:
- on-board computer information read-out and vehicle settings customisation menu,
- remote radio and navigation system.

6 Steering column stalk for windscreen and rear screen wash/wiper.
7 Centre air vents.
8 Multimedia screen.
9 Heating or air conditioning controls.
10 Passenger airbag location.
11 Glove compartment
12 Controls for:
- front seat heating;
- activation/deactivation of the Stop and Start function;
- activation/deactivation, depending on the vehicle, of the ECO or MULTI-SENSE mode;
- hazard warning lights;
- electric door locking;
- activation/deactivation of the parking distance control;
- ...

13 USB sockets.
14 Charging zone/telephone storage
15 Gearstick.
16 Controls for:
- activating/deactivating the electronic parking brake;
- activation/deactivation of the function autohold.

17 Hands-free card holder
18 Handbrake.
19 Accessories socket.
20 Engine start/stop button.
21 Control for adjusting steering wheel height and reach.
22 Automatic gearbox paddles
23 Bonnet release control.
24 Main switch and controls for the Cruise control/speed limiter, adaptive cruise control and “Lane Centring” functions.
25 Controls for:
- lighting rheostat for control instru- ments;
- headlight beam height remote adjustment;
- activation/deactivation of the steering wheel heating;
- activation/deactivation of Lane Keeping Assist/Lane Departure Warning;
- heated windscreen.

WARNING LIGHTS (1/6)

The display of information shown below DEPENDS ON THE VEHICLE EQUIPMENT AND COUNTRY.

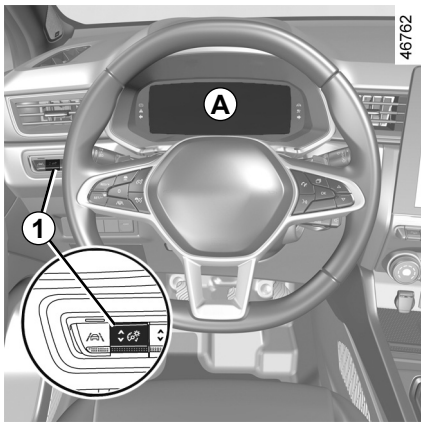

Instrument panel *A*, *B* or *C* : it illuminates when the ignition is switched on. Press or lift the ***1*** switch as many times as required to adjust the intensity.

Warning light means you should drive **very carefully to an authorised dealer as soon as possible**. If you fail to follow this recommendation, you risk damaging your vehicle.

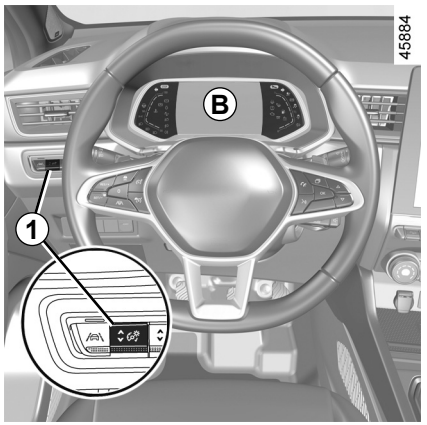

In some cases, the appearance of a warning light is accompanied by a message on the instrument panel.

For your safety, the warning light STOP requires you to stop immediately as soon as traffic conditions allow. Switch off the engine and do not restart it. Call an approved Dealer.

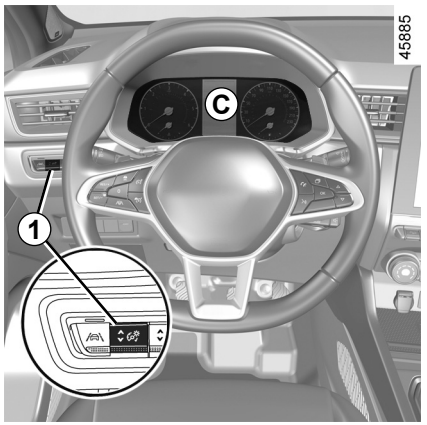

If no lights or sounds are apparent, this indicates a fault in the instrument panel. This indicates that it is essential to stop immediately (as soon as traffic conditions allow). Ensure that the vehicle is correctly immobilised and contact an approved Dealer.

OVSE23E2

WARNING LIGHTS (2/6)

The display of information shown below DEPENDS ON THE VEHICLE EQUIPMENT AND COUNTRY.



Side light warning light



Main beam headlight tell-tale



Dipped beam headlight tell-tale



Rear fog lights tell-tale



Automatic main beam headlight indicator light ➥ 1.90



Left-hand direction indicator tell-tale



Right-hand direction indicator tell-tale light



Indicator lightairbag

It lights up when the ignition or the engine is switched on and goes off after a few seconds.

If it does not come on when the ignition is switched on, or comes on when the engine is running, there is a fault in the system.

Contact your approved Dealer as soon as possible.

STOP light

STOP

This lights up when the ignition or engine is switched on and goes out as soon as the engine is running. It comes on with other warning lights and/or messages, and is accompanied by a beep.

It requires you to stop immediately, for your own safety, as soon as traffic conditions allow. Switch off the engine and do not restart it.

Contact an approved Dealer.



Brake circuit fault warning light

It lights up when the ignition or the engine is switched on and goes off after a few seconds.

If it comes on during braking and is accompanied by the STOP warning light and a beep, it indicates that the fluid level in the circuit is low or that there is a braking system fault.

Stop as soon as traffic conditions allow and consult an approved dealer.



Battery charge warning light

It lights up when the ignition or the engine is switched on and goes off after a few seconds.

If it comes on on the road, accompanied by the STOP warning light and a beep, this indicates an overload or discharge in the electrical circuit.

Stop as soon as traffic conditions allow and contact an approved Dealer.

WARNING LIGHTS (3/6)

The display of information shown below DEPENDS ON THE VEHICLE EQUIPMENT AND COUNTRY.



Oil pressure warning light
It lights up when the ignition or the engine is switched on and goes off after a few seconds.

If it comes on on the road, accompanied by the STOP warning light and a beep, stop immediately and cut the ignition.

Check the oil level. If the level is normal, the warning light is related to something else.

Call an approved Dealer.



Variable power-assisted steering warning light

It lights up when the ignition or the engine is switched on and goes off after a few seconds.

If it comes on while driving, alongside the warning light STOP, this means there is a system fault.
Contact an authorised dealer.



"AUTOHOLD" system warning light ➥ 2.21



Warning light

This lights up when the ignition or engine is switched on and goes out as soon as the engine is running. It can light up in conjunction with other warning lights and/or messages on the instrument panel. It means you should **drive very care- fully** to an approved Dealer as soon as possible. If you fail to follow this recommendation, you risk damaging your vehicle.



Warning light

If it appears in red during driving and is accompanied by the STOP indicator light, you must, for your safety, stop as soon as traffic conditions allow. Switch off the engine and do not restart it. Call an approved Dealer. If it appears in yellow during driving and is accompanied by the warning light, visit an approved dealer as soon as possible. **Meanwhile, drive with care**.

If you fail to follow this recommendation, you risk damaging your vehicle.



Handbrake "on" and electronic parking brake warning light ➥ 2.16 ➥ 2.17



Gear change indicators
This lights up to advise you to change to a higher gear (arrow pointing upwards) or lower gear (arrow pointing downwards) ➥ 2.22.



Warning light for the electronic stability program (ESC) and traction control system

It lights up when the ignition or the engine is switched on and goes off after a few seconds.

There are several reasons for the warning light to appear: ➥ 2.38.



Warning light for non-availability of the electronic stability program (ESC) and traction control system



Door status warning light

WARNING LIGHTS (4/6)

The display of information shown below DEPENDS ON THE VEHICLE EQUIPMENT AND COUNTRY.



Anti-lock braking warning light

It lights up when the ignition or the engine is switched on and goes off after a few seconds.
If it lights up when you are driving, it indicates a fault in the anti-lock braking system.

Braking will then be as normal, without the ABS. Contact an approved Dealer as soon as possible.



Particle filter system warning light ➥ 2.14



Tyre pressure loss warning ➥ 2.32



Toxic Fume Filter System Warning Light

On vehicles that are equipped, this light comes on when the engine is started and, depending on the vehicle, when the ignition is switched off while the engine is in the standby phase ➥ 2.10 then it goes out.

– If it lights up continuously, consult your approved dealer as soon as possible;
– If it flashes, reduce the engine speed until the light stops flashing. Contact your approved Dealer as soon as possible ➥ 2.30.



Low fuel level warning light

It lights up orange when the ignition or the engine is switched on and goes off after a few seconds.

If it comes on orange while driving and is accompanied by a beep, fill up with fuel as soon as possible. There is only approximately 31 miles (50 km) worth of fuel left.



Mode warning light ECO

It comes on when ECO mode is active ➥ 2.22.



Freewheel indicator light

➥ 2.22

WARNING LIGHTS (5/6)

The display of information shown below DEPENDS ON THE VEHICLE EQUIPMENT AND COUNTRY.



Coolant temperature warning light

This lights up blue when you switch on the ignition or start the engine.

If it turns red, stop and let the engine idle for a minute or two.

The temperature should lower and the warning light should return to a blue colour. If not, stop the engine. Let the engine cool down before checking the coolant.
Contact an approved Dealer.



Speed limiter warning light ➥ 2.77



Cruise control warning light ➥ 2.81



Adaptive cruise control warning light Stop and Go ➥ 2.86



Engine standby warning light ➥ 2.10



Unavailability of engine standby warning light ➥ 2.10



Brake pedal warning light

This lights up when the brake pedal should be depressed ➥ 2.126.



Overspeed warning light ➥ 1.62



Lane departure system warning light ➥ 2.43



Lane Keeping Assist system warning light ➥ 2.48



(Depending on vehicle) Indicator of failure or unavailability of active emergency braking ➥ 2.65



"Hands off steering wheel" detection warning light ➥ 2.48

WARNING LIGHTS (6/6)

The display of information shown below DEPENDS ON THE VEHICLE EQUIPMENT AND COUNTRY.



On display *D*

Passenger Airbag ON

➥ 1.51

Passenger Airbag OFF

➥ 1.51

Seat belt reminder warning lights ➥ 1.23

DISPLAYS AND INDICATORS (1/7)

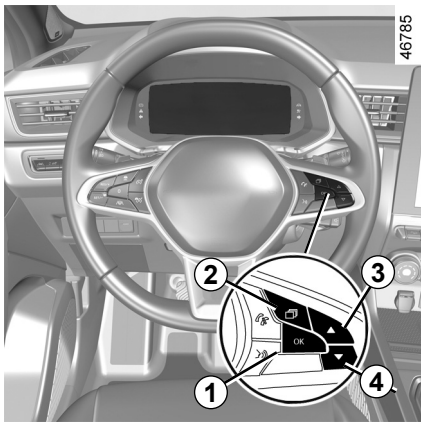

Engine oil level low warning

When the engine is started, the instrument panel display alerts you if the minimum oil level is reached. ➥ 4.4.

The first time the warning appears, it can be cleared by pressing ***1*** "OK ".

Subsequent warnings will disappear automatically after around 30 seconds.

Instrument panel in miles

(option to switch to km/h)

Vehicles not fitted with a multimedia screen

– With the ignition off, press the ***2*** switch as many times as required to reach the vehicle tab ***5***;

– press ***3*** or ***4*** repeatedly to access “Settings”, then press ***1*** “OK”;

– repeat the same operation to access “DASHBOARD”, then “Units”.

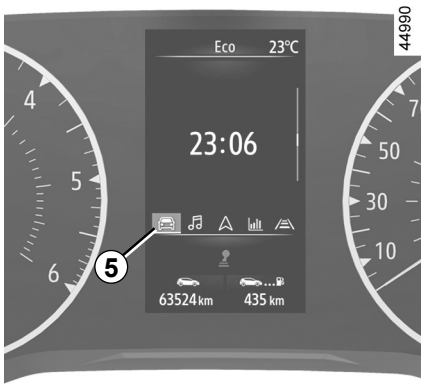

Vehicles fitted with a multimedia screen.

Please refer to the multimedia instructions to select the audio system.

Note: in both cases, once the battery is switched off, the on-board computer automatically returns to the original unit of measurement.

To return to the previous mode, repeat the same operation.

Please refer to the multimedia instructions for more information.

DISPLAYS AND INDICATORS (2/7)



Instrument panel *A*

It lights up when the ignition is switched on. In some cases, the appearance of a warning light is accompanied by a message.
Depending on the vehicle, you can customise your instrument panel with the content and colours of your choice.
For vehicles fitted with a multimedia screen, refer to the multimedia instructions.
For vehicles not fitted with a multimedia screen ➥ 1.80.

Speedometer *6*



Rev counter *7*
(graduations x 1000)
Depending on the selected customisation, it may not be displayed.

Overspeed buzzer
Depending on the vehicle and country, the  warning light is displayed and a beep sounds. This beep sounds as soon as the vehicle is travelling at over 75 mph (120 km/h). This warning light remains lit for as long as the vehicle is travelling at over 74 mph (120 km/h).

Driving style indicator *8* ➥ 2.22

Total mileage recorder *9* ➥ 1.73

Trip computer *10* ➥ 1.69

Estimated mileage with remaining fuel *11*
The value is displayed after driving 400 metres. ➥ 1.73.

Trip computer and multimedia information *12*
Depending on the vehicle, you can display information from the multimedia screen (compass, telephone, navigation, etc.) or information from the trip computer.
Please refer to the multimedia instructions for more information.

DISPLAYS AND INDICATORS (3/7)



Coolant temperature indicator *14*

In normal use, indicator ***14*** should be before area ***13***. Under “intensive” operating conditions, the needle may approach this zone. This is not serious unless the warning light STOP comes on accompanied by a message on the instrument panel and a beep.

Fuel gauge *15*

If the level is at the minimum, warning light integrated in the indicator comes on orange, accompanied by a beep. Fill up as soon as possible.

DISPLAYS AND INDICATORS (4/7)

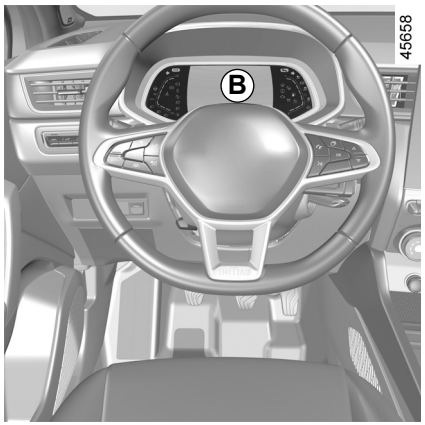

Instrument panel *B*

It lights up when the ignition is switched on. In some cases, the appearance of a warning light is accompanied by a message.
Depending on the vehicle, you can customise your instrument panel with the content and colours of your choice.
For vehicles fitted with a multimedia screen, refer to the multimedia instructions.
For vehicles not fitted with a multimedia screen ➥ 1.80.

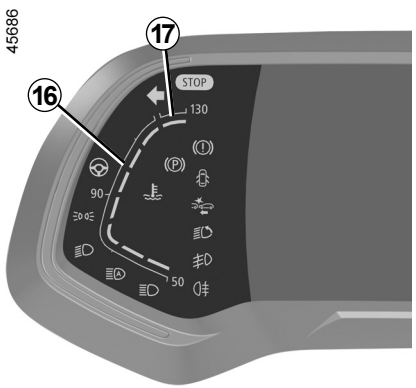

Coolant temperature indicator *16*

In normal use, indicator ***16*** should be before area ***17***. Under "intensive" operating conditions, the needle may approach this zone. This is not serious unless the warning light STOP comes on accompanied by a message on the instrument panel and a beep.

Speedometer *18*

Depending on the style selected, the display varies.

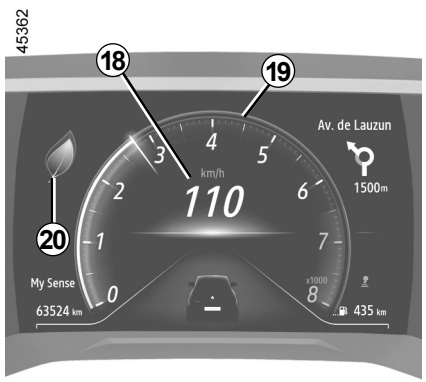

Overspeed buzzer
Depending on the vehicle and country, the  warning light is displayed and a beep sounds. This beep sounds as soon as the vehicle is travelling at over 75 mph (120 km/h). This warning light remains lit for as long as the vehicle is travelling at over 74 mph (120 km/h).

Rev counter *19*
(graduations x 1000)
This is displayed differently according to how the instrument panel is customised. Depending on the style selected, it may not be displayed.

Driving style indicator *20* ➥ 2.22

DISPLAYS AND INDICATORS (5/7)

45056



Multimedia information *21*
Depending on the vehicle, you can display information from the multimedia screen (the compass, telephone, navigation, etc.).
Please refer to the multimedia instructions for more information.

Estimated mileage with remaining fuel *22*
The value is displayed after driving 400 metres. ➥ 1.73.

Total mileage recorder *23* ➥ 1.73

Trip computer *24* ➥ 1.69

45687



Fuel gauge *25*

If the level is at the minimum, warning light integrated in the indicator comes on orange, accompanied by a beep. Fill up as soon as possible.

DISPLAYS AND INDICATORS (6/7)



Instrument panel *C*

It lights up when the ignition is switched on. In some cases, the appearance of a warning light is accompanied by a message.

Depending on the vehicle, you can customise your instrument panel with colours of your choice. For vehicles fitted with a multimedia screen, refer to the multimedia instructions.
For vehicle not fitted with a navigation system ➥ 1.80.

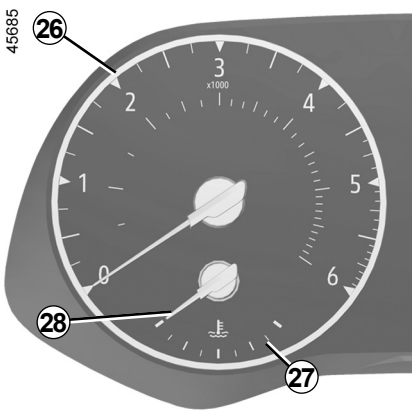

Rev counter *26*
(graduations x 1000)

Coolant temperature indicator *28*

In normal use, the indicator ***28*** should be before the red zone ***27***. Under “intensive” operating conditions, the needle may approach this zone. This is not serious unless the warning light STOP comes on accompanied by a message on the instrument panel and a beep.



Trip computer *29*
➥ 1.69

Estimated mileage with remaining fuel *30*
The value is displayed after driving 400 metres.
➥ 1.73

Total mileage recorder *31*
➥ 1.73

DISPLAYS AND INDICATORS (7/7)

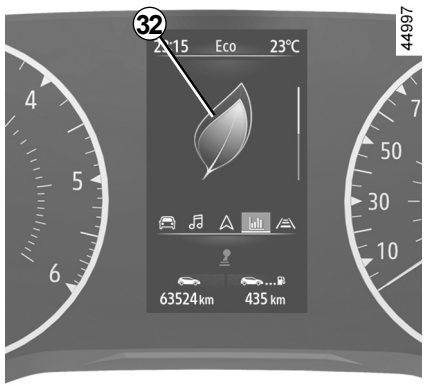

Driving style indicator *32* ➥ 2.22

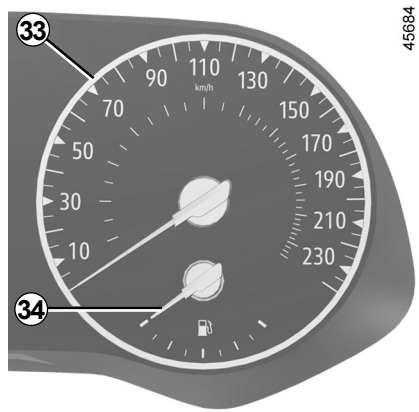

Speedometer *33*

Overspeed buzzer

Depending on the vehicle and country, the warning light is displayed and a beep sounds. This beep sounds as soon as the vehicle is travelling at over 75 mph (120 km/h). This warning light remains lit for as long as the vehicle is travelling at over 74 mph (120 km/h).

Fuel gauge *34*

If the level is at the minimum, warning light integrated in the indicator comes on orange, accompanied by a beep. Fill up as soon as possible.

TRIP COMPUTER: general information (1/4)

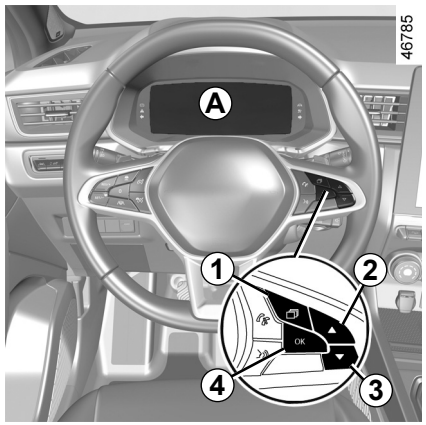

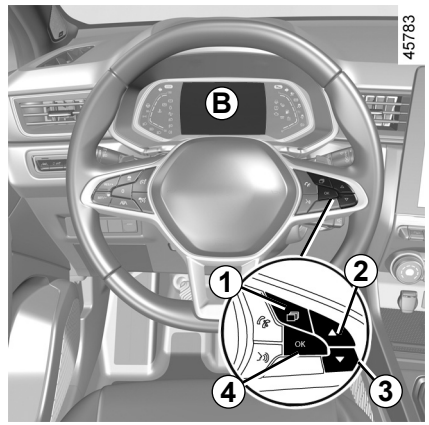

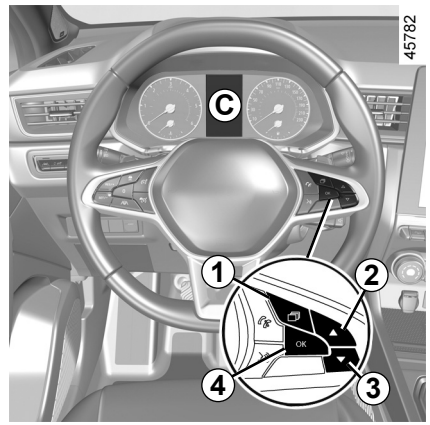

Trip computer *A*, *B* or *C*

Depending on the vehicle, this includes the following functions:

– distance travelled;
– journey settings;
– information messages;
– operating fault messages (connected to the warning light);
– warning messages (connected to the STOP warning light);
– vehicle settings customisation menu ➥ 1.80.

All these functions are described on the following pages.

TRIP COMPUTER: general information (2/4)



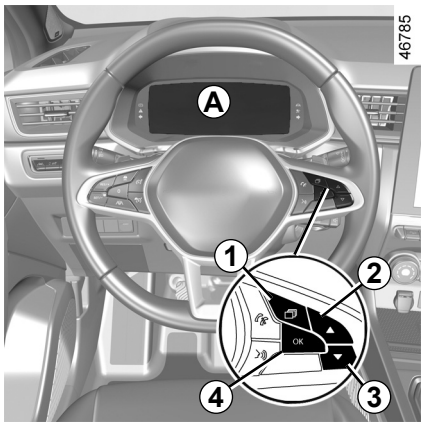

Vehicle fitted with *A*instrument panel

The functions are distributed in zones ***5***, ***6***, ***7***, and ***8***. The location of the zones differs depending on the style selected.

Press the ***1*** switch to browse between areas ***5*** and ***6***, then select the functions by pressing the ***2*** or ***3*** switch repeatedly.

TRIP COMPUTER: general information (3/4)

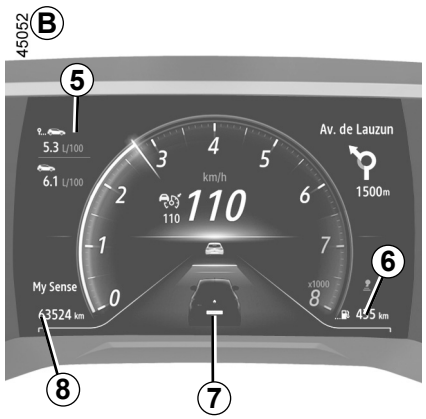

Vehicle fitted with *B*instrument panel

The functions are distributed in zones ***5***, ***6***, ***7***, and ***8***.

Press switch ***1*** to browse between the zones and select the functions by repeatedly pressing switch ***2*** or ***3***.

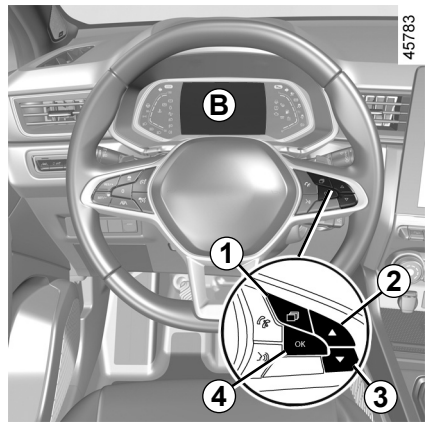

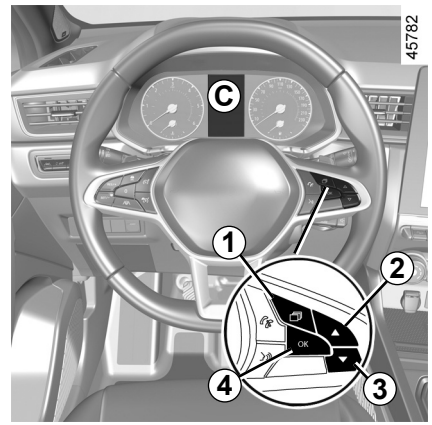

Vehicle fitted with *C*instrument panel

Press the switch ***1*** as many times as required to reach the “Vehicle” tab.

Press repeatedly using control ***2*** or ***3***, then if necessary use switch ***4*** to confirm.

TRIP COMPUTER: general information (4/4)

Selections
(the display depends on the vehicle equipment and country)

a) Trip log, operating faults and information message readout;

b) Journey settings:

– average fuel consumption;

– current fuel consumption;

– estimated range with remaining fuel;

– distance travelled;

– average speed;

c) trip mileage recorder and average speed;

d) Reset the tyre pressure;

e) set the time;

f) distance before service;

  – distance before service;

  – mileage before oil change;

g) Estimated range with remaining reagent.

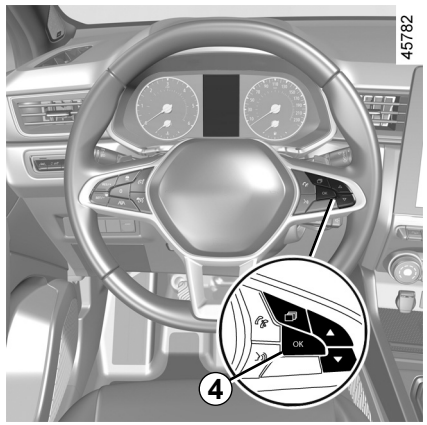

Resetting the trip mileage recorder and journey parameters (reset button)

With one of the trip parameters selected as the display, press and hold the ***4*** switch “OK” until the display resets to zero.

Automatic resetting of the journey parameters

Resetting occurs automatically when the maximum value of any of the parameters is exceeded.

Interpreting some of the values displayed after resetting

The values showing average fuel consumption, range and average speed will become more stable and reliable the further you travel after pressing the reset button.

For the first few miles after pressing the reset key you will notice that the range increases as you travel. This range takes into account the average fuel consumption since the last time the reset button was pressed. Therefore, the average fuel consumption may decrease when:

– the vehicle stops accelerating;

– the engine reaches its operating temperature (if the engine was cold when the reset key was pressed);

– when driving from an urban area onto the open road.

TRIP COMPUTER AND WARNING SYSTEM: journey parameters (1/4)

The display of information shown below DEPENDS ON THE VEHICLE EQUIPMENT AND COUNTRY.

Examples of selections	Interpreting the display selected
Vehicle Systems OK	**a) Trip log.** Successive display: – information messages (passenger airbag OFF etc.); – operating fault messages (“Check injection” etc.).
 7.4 L/100	**b) Current fuel consumption.** This value is displayed after a speed of approximately 20 mph (30 km/h) is reached.
 5.8 L/100	**Average fuel consumption** since the last reset. The value is displayed after having travelled at least 400 metres since the last reset.
55.8 mph (90 km/h)	**Current speed** (depending on the vehicle).

TRIP COMPUTER AND WARNING SYSTEM: journey parameters (2/4)

The display of information shown below DEPENDS ON THE VEHICLE EQUIPMENT AND COUNTRY.

Examples of selections	Interpreting the display selected
 112,4 km	**c) Mileage recorder: Distance travelled** since the last reset.
 123.4 km/h	**Average speed** since the last reset. The value is displayed after driving 400 metres.
Tyre pressure init. long press	**d) Reset the tyre pressure.** ➥ 2.32
16:30	**e) Setting the time.** ➥ 1.83

TRIP COMPUTER AND WARNING SYSTEM: journey parameters (3/4)

The display of information shown below DEPENDS ON THE VEHICLE EQUIPMENT AND COUNTRY.

Examples of selections On-board computer with mileage-before-service message	Interpreting the display selected
Service in 30 000 km / 12 months Service due in 300 km / 24 days Service Required	**f) Mileage before service and oil change.** **Mileage before service** **With the ignition on and engine not running**, access the “Mileage before service” information. When the distance value approaches its limit, there are several possible scenarios: – If the range is less than **930 miles (1,500 km)** or **one month:** the message “Service due” is displayed accompanied by the nearest term (distance or time); – range equal to **0 miles (0 km)** or **date of service reached:** the message “Service Required” is displayed accompanied by the warning light . The vehicle requires a service as soon as possible.

Reset: to reset the distance before the next service, press and hold button OK for approximately 10 seconds until the display shows the mileage before service permanently.

Note: If a service is performed without changing the engine oil, only the mileage before the next service should be reset. In the event of an oil change, both the distance before the next service and the next oil change should be reset.

TRIP COMPUTER AND WARNING SYSTEM: journey parameters (4/4)

The display of information shown below DEPENDS ON THE VEHICLE EQUIPMENT AND COUNTRY.

Examples of selections On-board computer with distance before next service message (cntd.)	Interpreting the display selected
Oil change in 30 000 km / 24 months	**f) Mileage before service or oil change.** **Mileage before service** **With the ignition on and the engine not running**, access the mileage information to display the mileage before the next oil change.
Depending on the vehicle, the mileage before an oil change varies according to the driving style (frequent driving at low speed, door-to-door journeys, extensive use at idling speed, towing a trailer, etc.). The distance remaining until the next oil change can therefore decrease more quickly in some cases than the actual distance travelled. **Reset**: to reset the distance before the next service, press and hold button OK for approximately 10 seconds until the display shows the mileage before oil change permanently. **Note**: If a service is performed without changing the engine oil, only the mileage before the next service should be reset. In the event of an oil change, both the distance before the next service and the next oil change should be reset.	
Top Up AdBlue before 2400 km	⇒ **g) Estimated range with remaining reagent.**

TRIP COMPUTER AND WARNING SYSTEM: information messages

These can help in the vehicle starting phase, or give information about a selection or a driving status.
Examples of information messages are given in the following pages.

Examples of messages	Interpreting the display selected
“Parking Brake ON”	Indicates that the parking brake has been applied.
“Turn Steering Wheel + START”	Turn the steering wheel slightly whilst pressing the vehicle start button to unlock the steering column.
“Vehicle Checks in Progress”	Displayed with the ignition on when the vehicle is running self-diagnostics.

TRIP COMPUTER AND WARNING SYSTEM: operating fault messages

These appear with the warning light and mean that you should drive very carefully to an authorised dealer as soon as possible. If you fail to follow this recommendation, you risk damaging your vehicle.
They disappear when the display selection key is pressed or after several seconds and are stored in the computer log. The warning light stays on. Examples of operating fault messages are given in the following pages.

Examples of messages	Interpreting the display selected
“Check vehicle”	Indicates a fault in one of the pedal sensors, battery management system or oil level sensor.
“WARNING: Check Airbag”	Indicates a fault in the restraint system in addition to the seat belts. In the event of an accident, it is possible that they may not be triggered.
“Check Anti- Pollution System”	Indicates a fault in the vehicle’s particle filter system.

TRIP COMPUTER AND WARNING SYSTEM: warning message

These appear with the STOP warning light and require you to stop immediately, for your own safety, as soon as traffic conditions allow. Stop your engine and do not restart it. Contact an approved Dealer.
Examples of warning messages are given in the following pages. **Note:** the messages appear on the display either individually or alternately (when there are several messages to be displayed), and may be accompanied by a warning light and/or a beep.

Examples of messages	Interpreting the display selected
“WARNING: Engine Failure Risk”	Indicates an injection fault, the vehicle’s engine has overheated or there is a serious engine fault.
“WARNING: Braking System”	Indicates a fault in the braking system.
“WARNING: Electric System”	Indicates a fault in the vehicle battery charging circuit (alternator etc.).
“Puncture”	Indicates that at least one wheel is punctured or severely underinflated.
“WARNING: Steering Fault”	Indicates a problem with the steering.

VEHICLE SETTINGS CUSTOMISATION MENU (1/3)

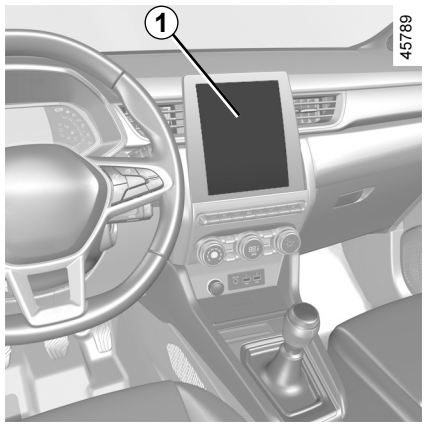

Depending on the vehicle equipment, this function allows you to activate/deactivate and adjust some of the vehicle's functions.

Vehicles fitted with a multimedia screen *1*

Accessing the settings menu

Refer to the various multimedia instructions for information on accessing the settings.

Adjusting the settings

Select a menu then the function to be modified (the display depends on the vehicle equipment and country):

a) "Driving":
- Indicator volume;
- Free-wheel;

b) "Access":
- Release driver's door;
- Lock doors during driving;
- Opening/closing in hands-free mode;
- Remote locking/Approach unlocking;
- Distance locking sound;
- Silent mode;
- Automatic locking;

c) "Wiping and lighting":
- Follow-me-home lighting;
- Wiping in reverse;
- Automatic front wiping;
- Wiping after washing;

d) "Welcome":
- External welcome;
- Automatic fold-out of mirrors;
- Interior welcome;
- Courtesy light auto mode.

Depending on the function, select:
- "ON" or "OFF" to activate or deactivate,

or
- a duration to adjust the time the lights are switched on (for the "Follow-me-home lighting" function for example).

Please refer to the multimedia instructions for further information.

For safety reasons, carry out any adjustments when the vehicle is not being driven.

VEHICLE SETTINGS CUSTOMISATION MENU (2/3)

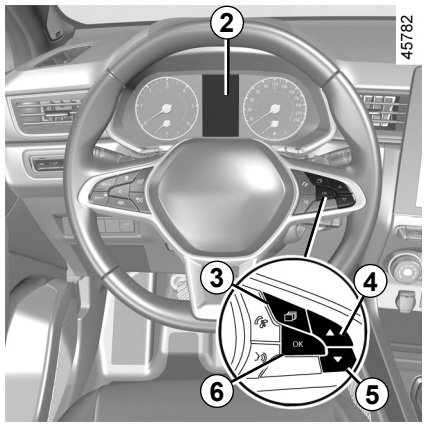

Vehicles not fitted with a multimedia screen

Accessing the settings menu on display *2*

With the vehicle stopped, press the ***3*** switch as many times as required to reach the “Vehicle” tab. Press repeatedly on the ***4*** or ***5*** switch to access the “Settings” menu, then confirm by pressing ***6*** “OK”.

Adjusting the settings

Navigate using the ***4*** or ***5*** control to select the function to be modified and press ***6*** “OK” to confirm (display may vary according to vehicle equipment and country):

a) “DASHBOARD”:
- Language;
- Unit;
- Style;
- Colour;

b) “VEHICLE“:
- Rear windscreen wiping in reverse gear;
- Automatic windscreen wiping;
- Front/rear drip wiping function;
- Free wheel in ECO mode;
- External welcome;

c) “PARKING ASSIST”:
- Beep sound volume;

d) “DRIVING ASSIST”:
- Lane departure warning sound volume;
- Lane departure warning sensitivity;
- Lane departure warning vibration;
- Lane keeping assist sensitivity;
- Blind spot warning;
- Active braking;
- Overspeed warning;
- Distance warning;

e) “LIGHTING”:
- Courtesy light auto mode;
- Automatic follow-me-home lighting;
- Follow-me-home lighting: XX seconds;

f) “ACCESS”:
- Lock doors during driving;
- Opening/closing in hands-free mode;
- Unlock the driver’s door only;
- Automatic re-locking;
- Silent locking;
- Automatic opening/closing;
- Automatic fold-out of mirrors;

g) “RESET“.

☑ function activated

☐ function deactivated

VEHICLE SETTINGS CUSTOMISATION MENU (3/3)

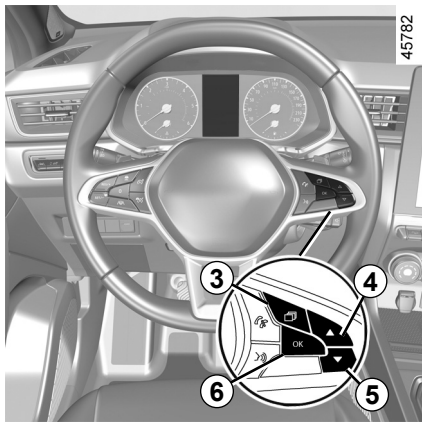

Once a line has been selected, press ***6*** “OK” to adjust the function.

If you select either “PARKING ASSIST” then “VOLUME”, or “DASHBOARD” then “LANGUAGE”, you will have to make a further selection (sound volume of the parking distance control or instrument panel language). In this case, make your selection and confirm it by pressing “***6*** OK”, the selected value is shown by a ☑ in front of the line.

To exit the menu, press ***4*** or ***5*** to access “BACK” and confirm by pressing ***6*** “OK”. It may be necessary to carry out this operation more than once.

The vehicle settings personalisation menu cannot be used when driving. At a speed exceeding 12 mph (20 km/h), the instrument panel display switches automatically back to trip computer and warning system mode.

OVSE23E2

CLOCK AND EXTERIOR TEMPERATURE (1/2)

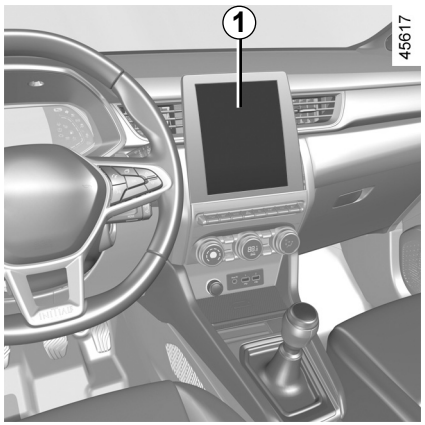

Vehicles fitted with a multimedia screen

The time and exterior temperature are displayed on the multimedia screen ***1***.

Refer to the multimedia instructions.

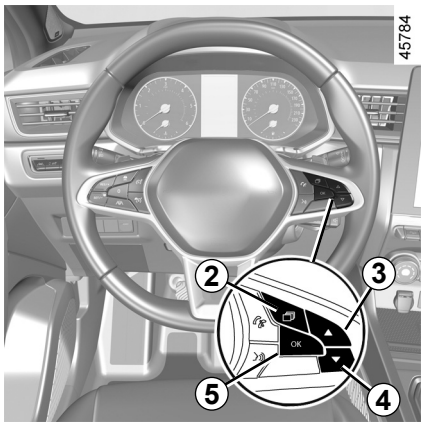

Vehicles not fitted with a multimedia screen

Press the switch ***2*** as many times as required to reach the “Vehicle” tab.

Repeatedly press control ***3*** or ***4*** to set the ***6*** clock.

Press and hold switch ***5*** “OK” until the time display flashes.



Set the hour using the ***3*** or ***4*** control, then wait for three seconds: the minutes will flash.

Set the minutes using the ***3*** or ***4*** control, then wait for three seconds: the flashing stops and the time setting is complete.

CLOCK AND EXTERIOR TEMPERATURE (2/2)

External temperature indicator

Special note:

When the external temperature is between -3°C and +3°C, the **°C** symbols flash (indicates risk of ice).

External temperature indicator

As ice formation is related to climatic exposure, local air humidity and temperature, the external temperature alone is not sufficient to detect ice.

Depending on the vehicle, If the electrical supply is cut (battery disconnected, broken supply wire, etc.), the clock will automatically go back to the right time after a few minutes once the system is capable of receiving information GPS.

STEERING-WHEEL, POWER-ASSISTED STEERING (1/2)

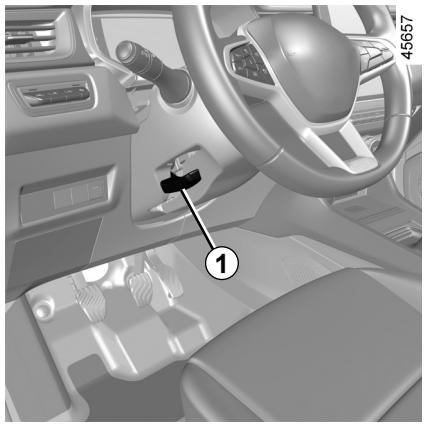

Adjusting the steering wheel height and depth

Lower the lever ***1*** and position the steering wheel in the required position.

Then, raise the lever fully, beyond the point of resistance to lock the steering wheel.

Make sure that the steering wheel is correctly locked.

For safety reasons, only adjust the steering wheel when the vehicle is stationary.

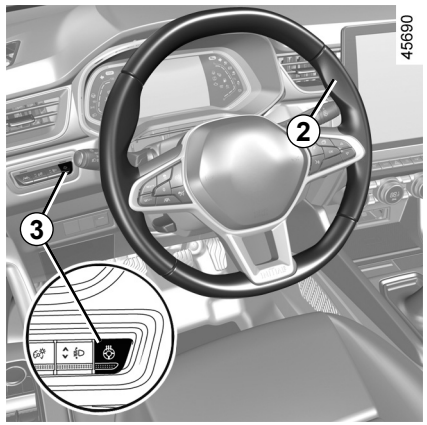

Steering wheel heating

(depending on vehicle)

This function heats the steering wheel ***2***.

Operating principle

When the temperature is reached, the function regulates the temperature of the heated areas for approximately 30 minutes and then switches off automatically.

Activating the function

With the ignition on, press the switch ***3***, the warning light integrated in the switch lights up.

Deactivating the function

- Automatic:

The function switches off automatically after the regulation phase of approximately 30 minutes. The warning light integrated in the switch ***3*** remains on.

Note: if the function has switched off automatically, press the switch ***3*** twice to reactivate it.

If switch ***3*** is not pressed again, the function will be reactivated the next time the ignition is switched on.

- Manually:

To deactivate the function during the regulation phase, press the switch ***3***. The indicator light in the switch ***3*** goes out.

STEERING-WHEEL, POWER-ASSISTED STEERING (2/2)

Power-assisted steering

Never drive with an inadequately charged battery.

Variable power-assisted steering

The variable power assisted steering system is equipped with an electronic control system which alters the level of assistance to suit the vehicle speed.

Steering is made easier during parking manoeuvres (for added comfort) while the force needed to steer increases progressively as the speed rises (for enhanced safety at high speeds).

Special feature of Stop and Start

With the engine on standby, power-assisted steering is no longer operational. In this case, it returns to its original state when the engine is restarted or when the speed exceeds 1 mph (1 km/h) (hill, slope etc.).

Note: the power-assisted steering depends on the driving mode selected in the “MULTI-SENSE” menu (➥ 3.2).

Never leave the steering wheel on full lock when the vehicle is stationary.

With the engine switched off, or if there is a system fault, it is still possible to turn the steering wheel. The force required will be greater.



Never switch off the ignition when travelling downhill, and avoid doing so in normal driving (assistance is not provided).

OVSE23E2

REAR VIEW MIRRORS (1/2)

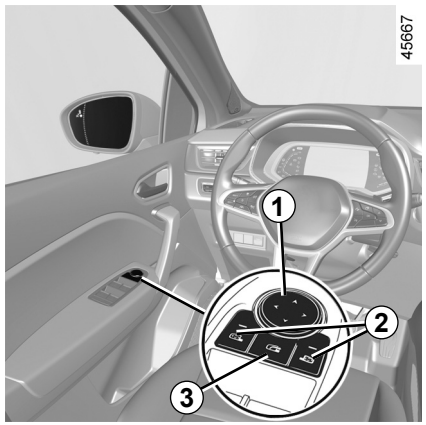

Door mirrors

Adjustment

When you select the door mirror using the ***2*** switch, the built-in warning light on the switch will appear. Then use the ***1*** button to adjust it to the desired position.

Heated door mirrors

Mirror de-icing is carried out at the same time as rear screen de-icing. ➥ 3.5 ➥ 3.11.

Electrical folding mirrors

The door mirrors will fold-out automatically when the vehicle is unlocked. The door mirrors fold in when the vehicle is locked.

Note: you can deactivate/activate the door mirrors folding mechanism ➥ 1.80.

You can force folding by pressing the ***3*** switch. In this situation, the door mirrors will remain folded until the ***3*** button is pressed again, regardless of automatic folding.

Special case

When the rear view mirror has been manually deployed or folded back, it is possible to reset it to a usage position.

To do this, press the ***3*** switch. A mechanical tapping noise can be heard from the door mirror.

If a tapping noise cannot be heard, press once again on ***3*** switch until the tapping noise can be heard from the door mirror.

For safety reasons, carry out any adjustments when the vehicle is not being driven.

Objects observed in the rear view mirror glass are actually closer than they appear. For your safety, take this into account in order to correctly assess the distance before any manoeuvre.

REAR VIEW MIRRORS (2/2)

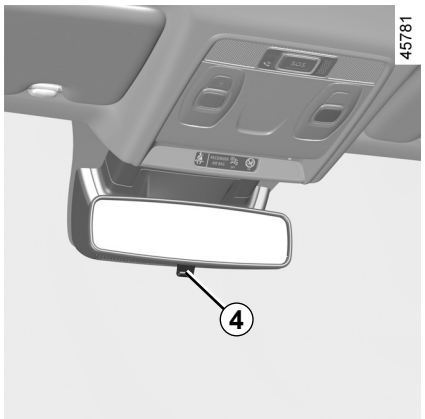

Interior rear view mirror

Its position can be adjusted.

Rear view mirror with lever *4*

When driving at night, to avoid being dazzled by the headlights of the vehicle behind, depress the little lever located behind rear view mirror ***4***.

Rear view mirror without lever *4*

The rear view mirror automatically darkens when you are being followed by a vehicle which illuminates you or in very bright lighting.

For safety reasons, carry out any adjustments when the vehicle is not being driven.

Objects observed in the rear view mirror glass are actually closer than they appear. For your safety, take this into account in order to correctly assess the distance before any manoeuvre.

FRONT HEADRESTS

45655

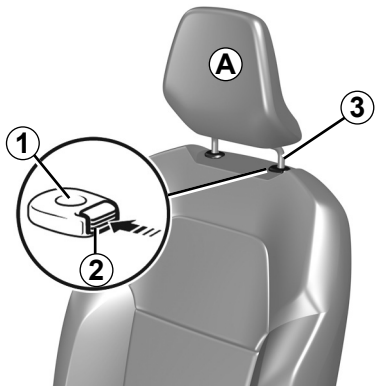

To raise the headrest

Press the ***2*** button and pull the headrest upwards to the height required. Check that the bonnet is correctly locked.

To lower the headrest

Press button ***2*** and guide the headrest down to the desired height. Check that the bonnet is correctly locked.

To raise the headrest

Raise it to its highest position (tilt the seatback backwards if necessary). Press button ***2*** and lift the headrest to release it.

To refit the headrest

Check that the headrest rods are clean ***3***.

Insert the headrest rods into the holes ***1*** (tilt the seatback backwards if necessary). Lower the headrest until it locks and press button ***2*** to adjust to the desired height. Check that each rod ***3*** on the seatback is securely locked.

26342

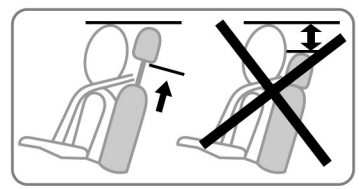

The headrest is important for safety. Ensure that it is in place and in the correct position: the top of the headrest should be as close as possible to the top of the head and there must be a minimal distance between the head and the headrest ***A***.

EXTERIOR LIGHTING AND SIGNALS (1/6)

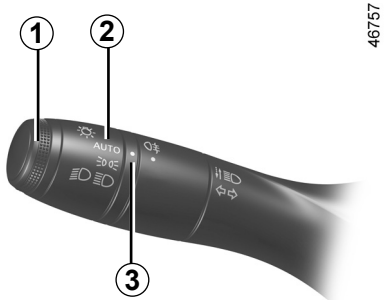

46757

Side lights

Turn ring ***2*** until the symbol is opposite mark ***3***.

This indicator light on the instrument panel comes on.

Daytime running lights function

The daytime running lights come on automatically with no action on stalk ***1*** when the engine is started, and they go off once the engine is switched off.

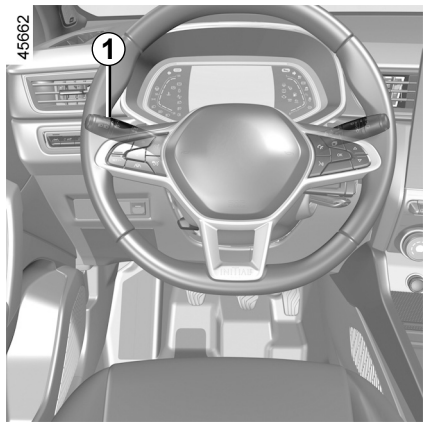

45662

Dipped beam headlights

Manual operation

Turn ring ***2*** until the symbol is opposite mark ***3***. This indicator light on the instrument panel comes on.

Automatic operation
(depending on the vehicle)

Turn ring ***2*** until the **AUTO** symbol is opposite mark ***3***: with the engine running, the dipped beam headlights switch on or off automatically depending on the brightness of the light outside, without any action on stalk ***1***.

Depending on the vehicle, the dipped beam headlights will appear automatically after several sweeps of the windscreen wiper blades.

Before driving at night, check that the electrical equipment is operating correctly and adjust the headlight beams (if your vehicle is not carrying its normal load).➥ 1.97. As a general precaution, check that the lights are not obscured (by dirt, mud, snow or objects being transported).

EXTERIOR LIGHTING AND SIGNALS (2/6)

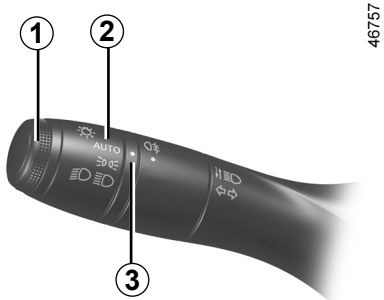

46757

Main beam headlights

With the engine running and the dipped beam headlights lit, push stalk ***1***. This indicator light on the instrument panel comes on.
To return to the dipped headlight position, pull stalk ***1*** towards you again.

"Raise lights during driving" function

When the main beam headlights are activated, the "Raise lights during driving" function improves driver visibility by automatically raising the dipped beam headlight and the main beam headlights.

During deactivation of the main beam headlights, the dipped beam headlights return to their original position.

Automatic main beam headlights

Depending on the vehicle, this system switches the main beam headlights on and off automatically. It uses a camera located behind the interior rear-view mirror to detect vehicles that are being followed and those coming in the opposite direction.

The system may encounter difficulties under certain conditions, including**:**
– extreme weather conditions (rain, snow, fog, etc.);
– obstruction in front of the windscreen or camera;
– when a following or oncoming vehicle has weak or hidden lighting;
– incorrect settings for the front headlights;
– reflective systems;
– ...

The main beam headlights come on automatically if:
– exterior light is weak;
– no other vehicles or lighting are detected;
– the vehicle speed is above approximately 25 mph (40 km/h).

If any of the above conditions are not fulfilled, the system switches to dipped beam headlights.

Note: make sure the windscreen is not obscured (dirt, mud, snow, condensation etc.).

To activate automatic main beam headlights:

turn ring ***2*** until the symbol **AUTO** is opposite mark ***3*** and push the stalk ***1***.

Warning light comes on the instrument panel.

OVSE23E2

EXTERIOR LIGHTING AND SIGNALS (3/6)

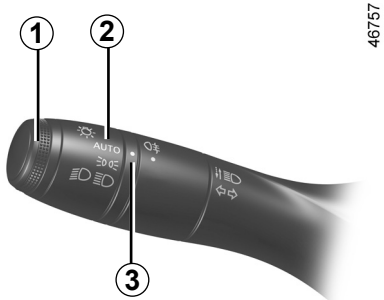

46757

Automatic main beam headlights (continued)

To deactivate automatic main beam headlights:

– turn ring ***2*** to a position other than **AUTO**;

or

– pull the stalk ***1***.

Warning light goes out on the instrument panel.

Note: the main beam headlights will be activated upon deactivation of the automatic main beam headlights function.

Operating faults

When the message “Check Automatic Lighting” appears on the instrument panel, the system is deactivated.
Consult an approved dealer.

Using the portable navigation system at night in the windscreen area below the camera may disturb the operation of the “automatic main beam headlights” system (risk of reflection on the windscreen).

The “automatic main beam headlights” system should under no circumstances be used to replace driver attention and responsibility with regard to vehicle lighting and adapting to light, visibility and traffic conditions.

EXTERIOR LIGHTING AND SIGNALS (4/6)

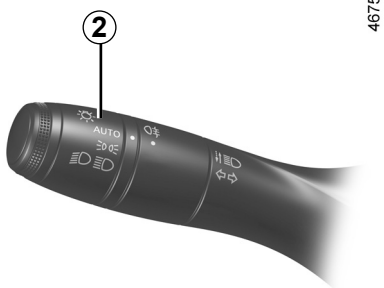

46757

Switching off the lights

Depending on the vehicle:

– manually move ring ***2*** to position **0**;

or

– the lights will go out automatically when the engine is switched off, the driver's door is opened or the vehicle is locked. In this case, the next time the engine is started the lights will be switched back on according to the position of the ring ***2***.

Note: if the fog lights are lit, the lights are not switched off automatically.

Lights-on reminder buzzer

If the lights are on after the engine is switched off, a warning beep sounds when the driver's door is opened to warn you that the lights are still on.

Operating faults

If the "Check lighting" message appears with the warning light and the warning light flashes on the instrument panel, this indicates a lighting fault.

Consult an authorised dealer.

Welcome and goodbye function

(depending on the vehicle)

Once the function is activated, the daytime running lights and the rear side lights will light up automatically upon detection of the card or when the vehicle is unlocked.

They switch off automatically:

– approximately one minute after lighting up;

– when starting the engine based on the position of the lighting stalk;

or

– upon locking the vehicle.

Activating/deactivating the function

For activation or deactivation of the external reception, refer to the multimedia manual.

Select **ON** or **OFF**.

EXTERIOR LIGHTING AND SIGNALS (5/6)

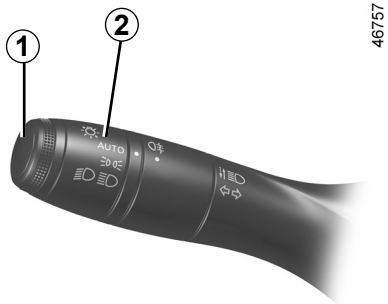

46757

“See-me-home lighting” function

This function enables you to briefly switch on the side lights and dipped beam headlights (e.g. to provide light when opening a gate).

With the engine and lights switched off, the ***2*** ring in **AUTO** position (or, depending on the vehicle, in **0** position) pull the stalk ***1*** towards you: the side lights and dipped beam headlights will switch on for approximately 30 seconds along with the and warning lights on the instrument panel.

To increase this duration, you may pull the stalk up to four times (total time restricted to approximately two minutes). On the instrument panel, the message “lighting on _ _ _” followed by the remaining time will appear as confirmation. You can then lock your vehicle.

To switch off the lights before they switch off automatically, turn the ***2*** ring to any position then return it to **AUTO** position (or, depending on the vehicle, to **0** position).

EXTERIOR LIGHTING AND SIGNALS (6/6)

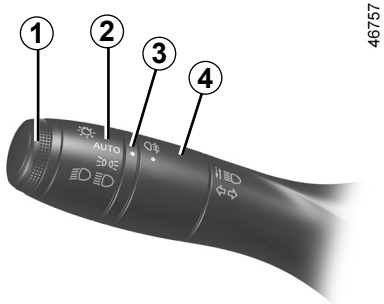

46757

Rear fog lights

Turn centre ring ***4*** on the stalk until the symbol faces mark ***3***, then release it.

Operation of the fog lights depends on the exterior lighting selected, and an indicator light will light up on the instrument panel.

Do not forget to switch off the fog lights when they are no longer needed, to avoid inconveniencing other road users.

Switching off the lights

Turn the centre ring ***4***again until the ***3*** symbol is opposite the symbol for the fog lights. The corresponding indicator light on the instrument panel goes out.

The rear fog lights switch off when the exterior lights are switched off.

When driving in fog or snow, or when transporting objects which are higher than the roof, the headlights do not come on automatically.

Switching on the fog lights remains the responsibility of the driver: the indicator lights on the instrument panel inform you whether the fog lights are lit (indicator light on) or not (indicator light not on).

AUDIBLE AND VISUAL SIGNALS

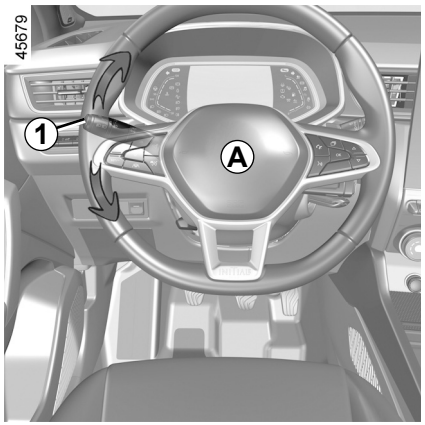

Horn

Press the steering wheel boss ***A*** to activate the horn.

Headlight flasher

Pull stalk ***1*** towards you then release it to flash the headlights.

Direction indicators

Move the stalk ***1*** in the same direction as you want to move the steering wheel.

One-touch mode

Briefly shift the stalk ***1*** upwards or downwards, not exceeding the point of resistance, then release it: the stalk will return to its original position and the direction indicator light concerned will flash three times.

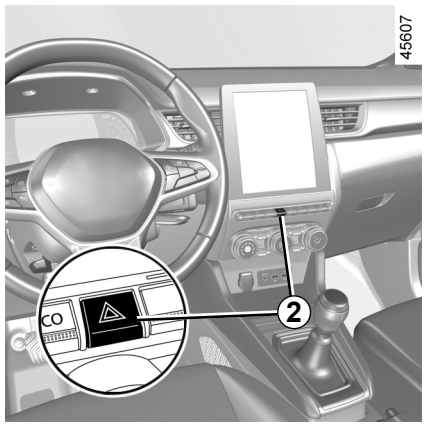

Hazard warning lights

Pressing switch ***2*** illuminates all four direction indicators and the side-mounted indicator lights simultaneously.

It must only be used in an emergency to warn drivers of other vehicles that you have had to stop in an area where stopping is prohibited or unexpected, or that you are obliged to drive under special conditions.

HEADLIGHT BEAM ADJUSTMENT

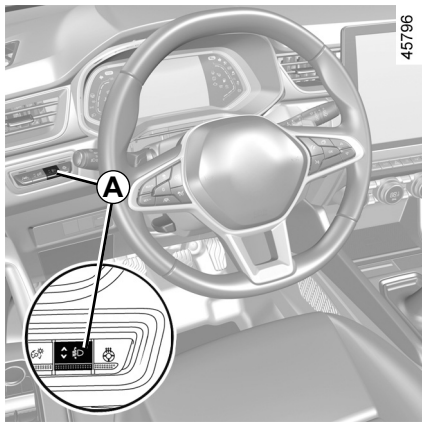

Switch ***A*** is used to adjust the height of the headlight beams according to the load.

With the dipped beam headlights lit, press or lift switch ***A*** as many times as is necessary to select the required position on the instrument panel.

Note: depending on the vehicle, when the engine is started, the position selected is displayed on the instrument panel for approximately 30 seconds and for 5 seconds each time switch ***A*** is pressed.

	Examples of positions for adjusting control *A* according to the load
Driver alone or with front passenger	0
All seats occupied	1
Driver with passengers and luggage (or load) reaching the maximum permissible all-up weight	3
Driver without passengers and luggage (or load) reaching the maximum permissible all-up weight	4

* depending on the vehicle

The table below gives some examples. In all cases, adjust control ***A*** according to the vehicle load so that the road can be seen and other drivers are not dazzled.

WINDSCREEN WASH, WIPE (1/5)

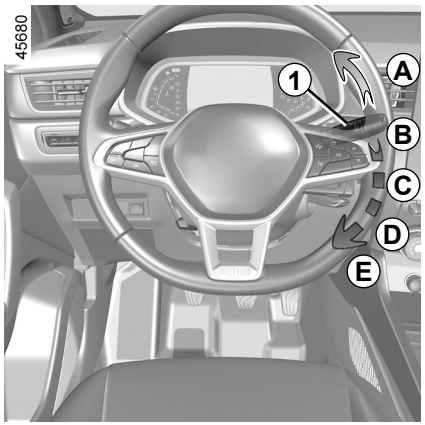

Vehicle fitted with intermittent windscreen wipers

A **single sweep**
A short push will trigger one sweep of the wipers.

B **stop**

C **intermittent wiping**
The wipers will pause for several seconds between sweeps. It is possible to change the time between sweeps by turning ring ***2***.

D **slow continuous wiping**

E **fast continuous wiping**

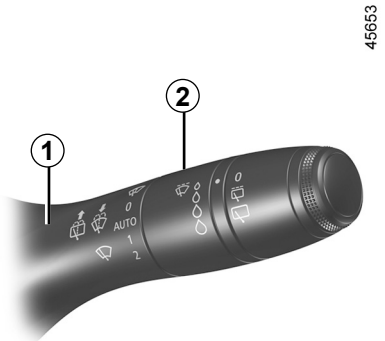

Special note

When driving the vehicle, the wiping speed slows down whenever the vehicle stops.

For example, fast wiping speed will slow to normal wiping speed.

As soon as the vehicle moves off, wiping will return to the speed originally selected.

If stalk ***1*** is operated, it overrides and cancels the automatic function.

WINDSCREEN WASH, WIPE (2/5)

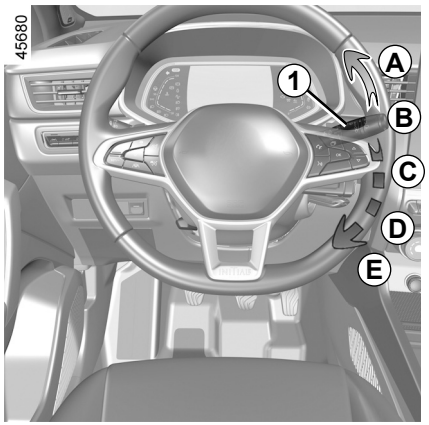

Vehicle fitted with front windscreen wiper rain sensor

The rain sensor is located on the windscreen, in front of the interior rear-view mirror.

A **single sweep**
A short push will trigger one sweep of the wipers.

B **stop**

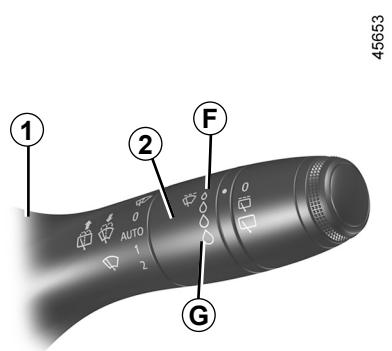

C **automatic wiper function**
When this position is selected, the system detects water on the windscreen and triggers the wipers at a suitable wiping speed. It is possible to change the triggering threshold and the time sweeps by turning ring ***2***:
– ***F***: minimum sensitivity;
– ***G***: maximum sensitivity.

The higher the sensitivity, the quicker the wipers will react and the faster the wipe.

When activating automatic wiping or when increasing sensitivity, one sweep of the blades is performed.

Note:

– the rain sensor is only intended as a driving aid. In the event of reduced visibility, the driver should manually activate the wipers. In foggy weather or during snowfalls, wiping is not automatically triggered and remains under the driver's control;
– in the event of temperatures below zero, automatic wiping is not activated when the vehicle is started. It is automatically activated as soon as the vehicle exceeds a certain speed (approximately 5 mph (8 km/h));
– do not activate automatic wiping in dry weather;
– fully de-ice the windscreen before activating automatic wiping;
– when washing the vehicle under a roller type car wash, return the ring ***1*** to the ***B*** position to deactivate automatic wiping.

WINDSCREEN WASH, WIPE (3/5)

Operating faults

In the event of a malfunction of the automatic wiping, the wiper is set to intermittent wiping.

Call an approved Dealer.

The operation of the rain sensor may be interrupted in the event of:

– damaged windscreen wipers; a film of water or traces left by a blade in the sensor's detection zone may increase the response time of the automatic wiper, or increase the wiping frequency;

– a windscreen with any chip or crack level with the sensor, or a windscreen covered in dust, dirt, insects, ice, the use of washing wax and water-repellent chemicals; the windscreen wiper will be less sensitive or may even not react at all.

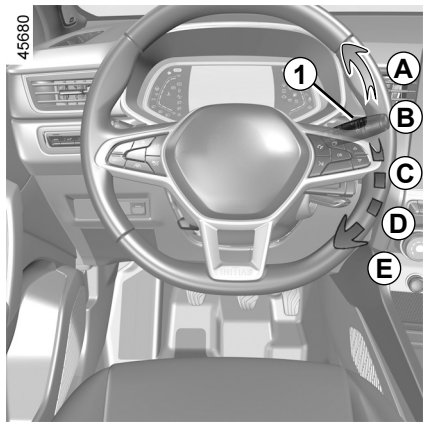

D **slow continuous wiping**

E **fast continuous wiping**

Special note

When driving the vehicle, the wiping speed slows down whenever the vehicle stops.

For example, fast wiping speed will slow to normal wiping speed.

As soon as the vehicle moves off, wiping will return to the speed originally selected.

If stalk ***1*** is operated, it overrides and cancels the automatic function.

Precautions

– In the event of ice, check whether the blades are stuck to the windscreen before operating the wiping mechanism. If you activate the wipers while the blades are stuck down with ice, you may risk damaging both the blade and the wiper motor.

– Do not activate the wipers on a dry screen. This will lead to premature wear or damage to the blades.

WINDSCREEN WASH, WIPE (4/5)

Specific front wiper position (service position)

This position enables the blades to be lifted to remove them from the windscreen.

It may be useful to:

– to clean the blades;

– to release the blades from the windscreen in winter;

– replace the blades ➥ 5.34.

With the ignition on or engine started, lift the stalk twice ***1*** to position ***A*** (single sweep).

The blades stop slightly away from the bonnet.

To return the blades to low position, with the ignition on, ensure that the wipers have folded down onto the windscreen, then move the stalk ***1*** to position ***A*** (single sweep).

Before switching on the ignition, place the wipers on the windscreen. Otherwise, there may a risk of damage to the bonnet or the wipers when they are switched on.

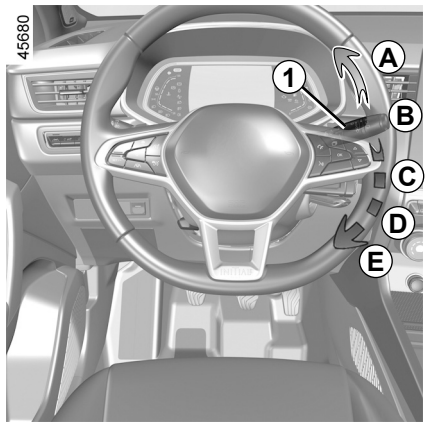

Before any action involving the windscreen (washing the vehicle, de-icing, cleaning the windscreen, etc.) return stalk ***1*** to position ***B*** (stop).

Risk of injury and/or damage.

In the event of obstacles on the windscreen (dirt, snow, ice etc.), clean the windscreen (including the central area located behind the interior rear view mirror) before starting the wipers (risk of motor overheating).

If an object is preventing a blade from moving, it may stop functioning.

Remove the obstacle and reactivate the wiper using the wiper stalk.

OVSE23E2

WINDSCREEN WASH, WIPE (5/5)

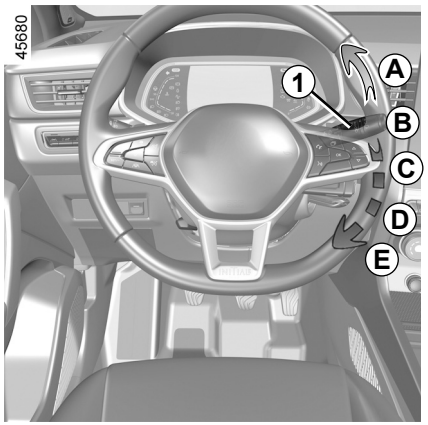

Windscreen washer

With the ignition on, pull stalk ***1*** then release.

A longer pull will trigger, in addition to the windscreen washer, two sweeps of the wipers followed, a few seconds later, by a third.

On vehicles fitted with a multimedia screen, you can choose to activate or disable the third sweep of the blades. ➥ 1.80

Note: in temperatures below zero, the washer liquid may freeze on the windscreen, reducing visibility. Heat the windscreen using the demister control before cleaning.

When working in the engine compartment, ensure that the windscreen wiper stalk is in position **B** (stop).

Risk of injury.

OVSE23E2

Efficiency of a wiper blade

Check the condition of the wiper blades. How long they last depends on you:
– it must remain clean: clean the blade and the screen regularly with soapy water;
– do not use it when the screen is dry;
– free it from the screen when it has not been used for a long time.

In all cases, replace it as soon as it begins to lose efficiency: approximately once a year. ➥ 5.34.

Precaution for using the wipers

– In freezing or snowy weather conditions, clear the screen before starting the wipers (risk of motor overheating);
– ensure that no objects are obstructing the travel of the blade.

REAR SCREEN WASHER, WIPER (1/2)

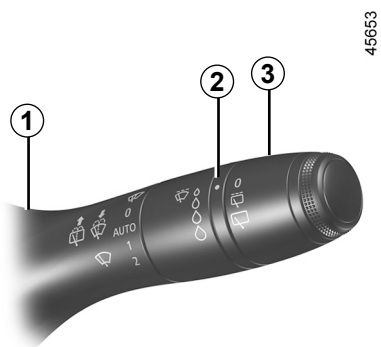

Rear screen wiper

With the ignition on, turn ring ***3*** on stalk ***1*** to align the symbol with mark ***2***.

- **stop;**
- **intermittent wiping.**
  The wipers will pause for several seconds between sweeps. Wiping frequency varies with vehicle speed;
- **slow continuous wiping.**

To stop the operation, pivot ring ***3*** again.

Note:

When washing using a roller type car wash, return the ring ***3*** on the stalk ***1*** to the stop position to deactivate automatic wiping.

Follow usage recommendations.

Do not use the wiper arm to open or close the tailgate.

Before any action involving the rear screen (washing the vehicle, de-icing, cleaning, etc.) return stalk ***1*** to the stop position.

Risk of injury and/or damage.

Efficiency of a wiper blade

Check the condition of the wiper blades. How long they last depends on you:

- it must remain clean: clean the blade and the screen regularly with soapy water;
- do not use it when the screen is dry;
- free it from the screen when it has not been used for a long time.

In all cases, replace it as soon as it begins to lose efficiency: approximately once a year. ➥ 5.34.

Precaution for using the wipers

- In freezing or snowy weather conditions, clear the screen before starting the wipers (risk of motor overheating);
- ensure that no objects are obstructing the travel of the blade.

OVSE23E2

REAR SCREEN WASHER, WIPER (2/2)

Activation/deactivation of the rear screen wiper

Engaging reverse gear triggers intermittent wiping (if the front wipers are in operation). If your vehicle is equipped with a vehicle settings customisation menu, you can opt to activate or deactivate this function. ➥ 1.80.

For vehicles not fitted with a settings customisation menu, you can have this function deactivated by an authorised dealer.

In the event of obstacles present on the rear window (dirt, snow, etc.), the wiper will try to sweep away all the obstacles. If an obstacle prevents the blade from moving, it can be stopped. Remove the obstacle, wait for around 30 seconds and reactivate the wiper using the wiper stalk.

Precautions

– In the event of ice, check that the blades are not stuck to the windscreen before operating the wipers. If you activate the wiper while the blade is blocked by ice, you risk damaging both the blade and the wiping motor.

– Do not operate the wipers on a dry screen. This will lead to the premature wear or damage to the blades.

45653



Rear screen wash/wipe

With the ignition on, push and hold stalk ***1***, then release.

Holding the stalk for longer will trigger (in addition to the windscreen washer) two sweeps of the wipers followed, a few seconds later, by a third (drip wiping function).

When the stalk is released, it returns to the rear wipe position.

FUEL TANK (1/3)

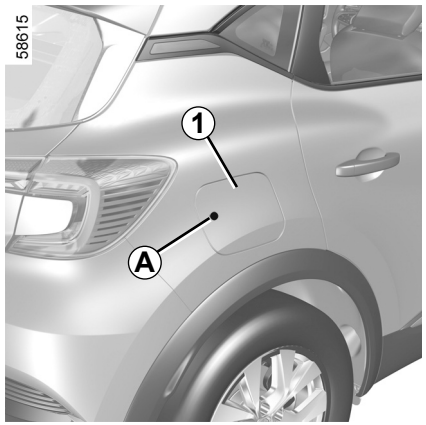

Useable tank capacity:

48 litres approximately.

With the vehicle unlocked, to open cover ***1***, press area ***A*** then release. The cover ***1*** opens slightly.

Use the cap holder ***2*** on the flap ***1*** during filling to hold the cap ***3*** in place.

For details on filling the fuel tank, refer to the information on “Filling with fuel”.

To close it, press on the fuel filler flap by hand, as far as it will go.

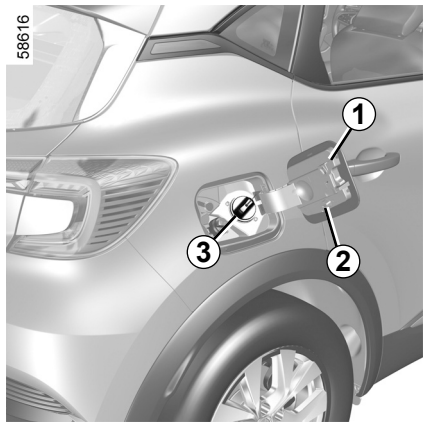

Filler cap: this is specific.

If you have to replace it, make sure it is identical to the original cap. Contact an approved Dealer.
Never place the cap near a source of heat or flame.

Do not wash the filler area with a high-pressure washer.

Fuel grade

Use a high-grade fuel that complies with the legislation in force in each country and which **must** comply with the specifications given on the label on the cover ***1***. ➥ 6.5.

Fuel types that conform to European standards with which the engines of vehicles sold in Europe are compatible: refer to the table ➥ 6.5.

Do not mix even small amounts of petrol (unleaded or E85) with diesel.
Do not use ethanol-based fuel if your vehicle is not compatible with this fuel.

Do **not** add reagent to the fuel – otherwise you risk damaging the engine ➥ 0.8. If you wish to add an additive to the fuel, use a product approved by our Technical Department.
Consult an approved dealer.

OVSE23E2

FUEL TANK (2/3)

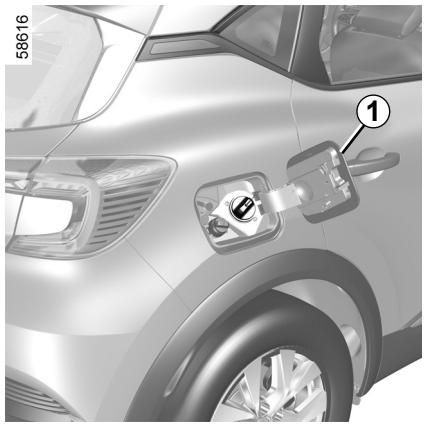

It is **essential** to use unleaded petrol. The octane rating (RON) must comply with the information given on the label on the cover ***1*** ➥ 6.5.

After filling, check that the cap and cover are closed.

Filling with fuel

With the ignition off, insert the nozzle and insert it **fully** before turning it on to fill the fuel tank (risk of splashing).

Keep the nozzle in this position throughout the entire filling operation.
When the pump cuts out automatically at the end of the filling procedure, a maximum of two further filling attempts may be made, as there must be sufficient space in the fuel tank to allow for expansion.
Make sure that no water enters the fuel tank during filling. The cover ***1*** and its surround must remain clean.

Special case

When the vehicle has been stopped for around three months, **you must add fuel to prevent damage to the fuel pump**.

To do this, with the ignition off, top-up at least 1.10 gallons (**5 litres**) then start the engine to operate the pump and renew the fuel in the circuit.

If it is not possible to add at least 1.10 gallons (5 litres) of fuel due to the fuel level in the tank, drive the vehicle until the tank has capacity.

Using leaded petrol will damage the antipollution system and may lead to a loss of warranty.

To ensure that the fuel tank is not filled with leaded petrol, the fuel tank filler neck contains a restrictor fitted with a foolproof system which **only allows the nozzle for unleaded petrol to be used** (at the pump).

To fill up with fuel, the engine must be stopped (and not only on standby in the case of vehicles equipped with the STOP and START function): you must switch off the ignition ➥ 2.4, ➥ 2.5.

Fire hazard.

FUEL TANK (3/3)

No modifications whatsoever are permitted on any part of the fuel supply system (electronic units, wiring, fuel circuit, injectors, protective covers, etc.) as this may be dangerous (unless undertaken by qualified Network personnel).

Persistent fuel odour

If you notice a persistent fuel odour you should:

– stop the vehicle as soon as traffic conditions allow and switch off the ignition;

– switch on the hazard warning lights and ask your passengers to leave the vehicle and stay clear of the traffic;

– contact an approved Dealer.

OVSE23E2

Section 2: Driving

Running in 2.2
Ignition switch 2.3
Starting, stopping the engine. 2.4
Stop and Start Function. 2.10
Special features of petrol versions 2.14
Gear lever, Handbrake 2.16
Electronic parking brake 2.17
“AUTOHOLD” function. 2.21
Eco-driving. 2.22
Maintenance and antipollution advice 2.30
Environment 2.31
Tyre pressure loss warning 2.32
Driver correction devices and aids 2.38
Lane departure warning. 2.43
Lane Keeping Assist 2.48
Blind spot warning 2.54
Safe distance alert. 2.61
Active emergency braking 2.65
Detection of road signs 2.73
Cruise control/speed limiter. 2.77
Adaptive cruise control 2.86
Highway and Traffic Jam Companion 2.100
Parking distance control 2.116
Reversing camera 2.123
Automatic gearbox. 2.126
Emergency call 2.130

RUNNING IN

Petrol version

For the first **600 miles** (1,000 km), do not exceed 78 mph (130 km/h) in the highest gear, or 3,000 to 3,500 rpm.

You may only expect top performance from your vehicle after approximately **1,800 miles (3,000 km)**.

Note: for a new vehicle in the running-in phase: the coolant level may be higher than the “**MAXI**” mark on the tank, then drop to between the levels “**MINI**” and “**MAXI**”. This does not present a risk.

Service intervals: refer to the Maintenance Document for your vehicle.

IGNITION SWITCH: vehicle with key

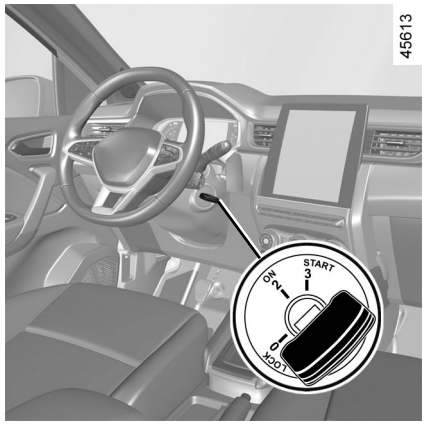

Ignition switch

Off position LOCK 0 (steering lock applied)

To lock: remove the key and turn the steering wheel until the steering column locks.

To unlock: turn the key and the steering wheel slightly.

“Ignition” position ON 2

The ignition is switched on: Any accessories (radio etc.) can be used.

“Start” position START 3

If the engine fails to start at the first attempt, the key must be turned back before the starter can be activated again. Release the key as soon as the engine starts.

STARTING, STOPPING THE ENGINE: vehicle with key

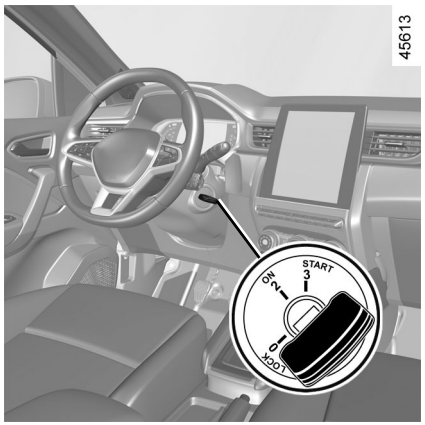

Starting the engine

To start:

On vehicles equipped with automatic gearboxes with a mechanical lever, set the lever to position **P**.

Never start your vehicle while freewheeling on a gradient.

Risk of non-activation of power-assisted steering.

There is a risk of accidents.

Petrol versions

– Activate the starter **without accelerating**;

– release the key as soon as the engine starts.

Special note: when starting the engine in very low exterior temperatures (below -10°C): hold down the clutch pedal until the engine starts.

Stopping the engine

With the engine idling, turn the key to the "**LOCK**" position **0**.

Note: on vehicles equipped with a manual gearbox, in the event of engine stalling the message "Press Clutch" will be displayed on the instrument panel. Fully press the clutch pedal to restart the engine.

Do not park the vehicle or run the engine in locations where combustible substances or materials such as grass or leaves can come into contact with the hot exhaust system.

Never switch off the ignition before the vehicle has stopped completely. Once the engine has stopped, the brake servo, power-assisted steering etc. and the passive safety devices such as the airbags and pretensioners will no longer operate.

Driver's responsibility when parking or stopping the vehicle

Never leave an animal, child or adult who is not self-sufficient alone in your vehicle, even for a short time. They may pose a risk to themselves or to others by starting the engine, activating equipment such as the electric windows or locking the doors. Also, in hot and/or sunny weather, please remember that the temperature inside the passenger compartment increases very quickly. **RISK OF DEATH OR SERIOUS INJURY**.

STARTING, STOPPING THE ENGINE: vehicle with card (1/5)

58609



The card must be inserted in detection zone ***1***.

To start:

– vehicles with an automatic gearbox, in the **P** position, press the brake pedal, press the ***2*** button, then release the brake pedal once the engine has started;

– vehicles with a manual gearbox, press the brake pedal and press the ***2*** button, then release the brake pedal once the engine has started. If a gear is engaged, also press the clutch pedal.

45780

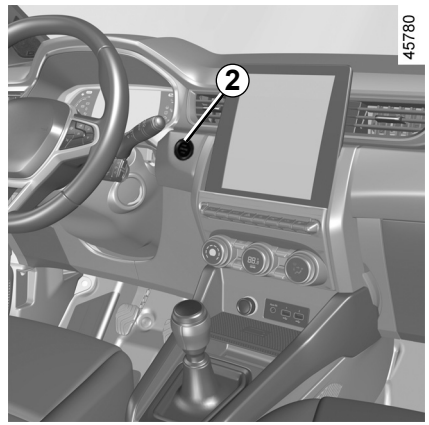

Special features

– If one of the starting conditions is not met, either the “Press Brake + START” or “Press Clutch + START” or “Select Gearbox Position P” message is displayed on the instrument panel;

– in some cases, it will be necessary to move the steering wheel whilst pressing the start button ***2*** to help unlock the steering column; the message “Turn Steering Wheel + START” will warn you of this;

Note: on vehicles equipped with a manual gearbox, in the event of engine stalling the message “Press Clutch” will be displayed on the instrument panel. Fully press the clutch pedal to restart the engine.

Driver’s responsibility when parking or stopping the vehicle

Never leave an animal, child or adult who is not self-sufficient alone in your vehicle, even for a short time.

They may pose a risk to themselves or to others by starting the engine, activating equipment such as the electric windows or locking the doors, for example.

Also, in hot and/or sunny weather, please remember that the temperature inside the passenger compartment increases very quickly.

RISK OF DEATH OR SERIOUS INJURY.

OVSE23E2

STARTING, STOPPING THE ENGINE: vehicle with card (2/5)

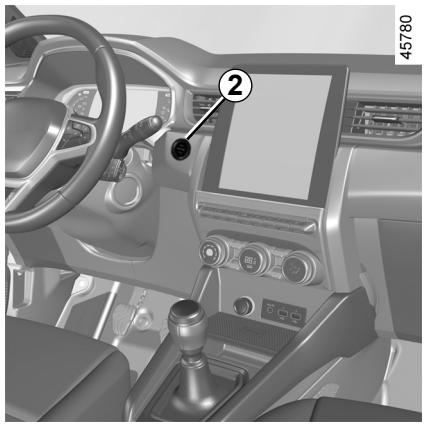

“Hands-free” starting with the tailgate open

In this case, the card should not be located in the luggage compartment, to prevent the risk of loss.

Accessories function

(switching on the ignition)

Once you have gained access to your vehicle, you may use some of its functions (radio, navigation, wipers, etc.).

To use the other functions, with the card in the passenger compartment, press the ***2*** button without pressing the pedals.

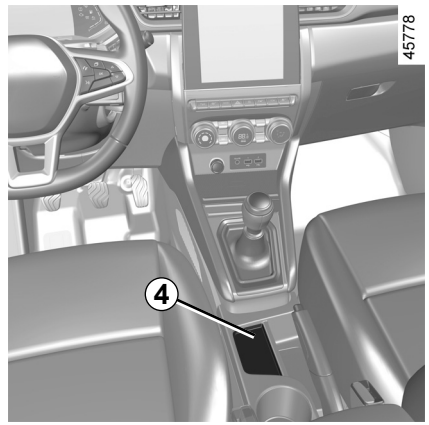

Operating faults

In certain cases, the hands-free card may not work:

– card battery flat, etc.;

– near to appliances operating on the same frequency as the card (monitor, mobile phone, video game, etc.);

– vehicle located in a high electromagnetic radiation zone.

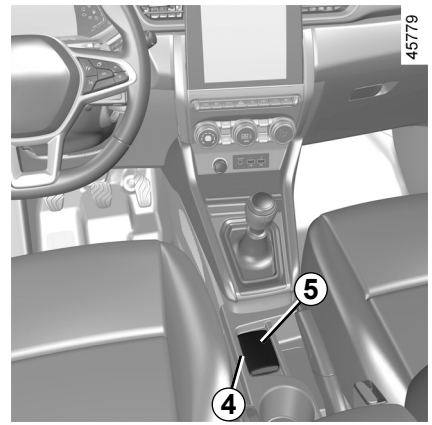

The message “Place card on zone + START” appears on the instrument panel.

Press the brake or clutch pedal, then place the card ***5*** (button side) on the placement area ***4***. Press the ***2*** button to start the vehicle. The message goes out.

STARTING, STOPPING THE ENGINE: vehicle with card (3/5)

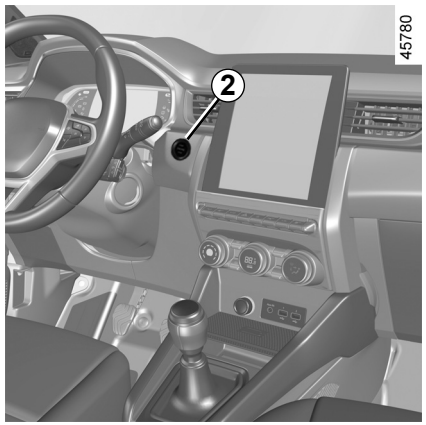

Conditions for stopping the engine

The vehicle must be stationary, lever in position **P** on vehicles with an automatic gearbox.

With the card in the vehicle, press button ***2***: the engine stops. The steering column is locked when a door is opened or the vehicle is locked.

If the card is no longer in the passenger compartment or if the card's battery is flat, when the vehicle is stationary and you try to switch the engine off, the message "Keycard absent : press/hold START" appears on the instrument panel: press the ***2*** button for longer than three seconds.

If the card is no longer in the passenger compartment, make sure you can retrieve it before pressing and holding the button. Without the card, you will not be able to restart the vehicle.

With the engine switched off, any accessories being used (radio, etc.) will continue to function for approximately 10 minutes.

When the driver's door is opened, the accessories stop working.

Never switch off the ignition before the vehicle has stopped completely. Once the engine has stopped, the brake servo, power-assisted steering, etc. and the passive safety devices such as the airbags and pretensioners will no longer operate.

When you leave your vehicle, especially if you have your card with you, check that the engine is completely switched off.

Driver's responsibility when parking or stopping the vehicle

Never leave an animal, child or adult who is not self-sufficient alone in your vehicle, even for a short time.

They may pose a risk to themselves or to others by starting the engine, activating equipment such as the electric windows or locking the doors, for example.

Also, in hot and/or sunny weather, please remember that the temperature inside the passenger compartment increases very quickly.

RISK OF DEATH OR SERIOUS INJURY.

OVSE23E2

STARTING, STOPPING THE ENGINE: vehicle with card (4/5)



Remote engine start-up

This function allows remote starting of the engine.

Initialisation

If the vehicle is so equipped, press the unlocking button ***7*** then press the remote start button twice in succession for about 2 seconds each time ***6***. The time between the two presses must be less than 5 seconds. The hazard warning lights will come on continuously for 3 seconds to confirm the system reset.

Note: once the function has been activated, it cannot be deactivated.

We advise you to contact an Approved Dealer.

Operation

To start the engine remotely, press the locking button ***8*** then within another 2 seconds, press the remote start button ***6*** for approximately 2 seconds. The hazard lights come on continuously for approximately 3 seconds and the engine starts.

The engine will run for 5 minutes. Once the engine is running, you can add another 5 minutes by pressing the ***8*** locking button again, then the remote start button ***6***. The hazard lights come on continuously for 3 seconds to confirm that the function has been prolonged.

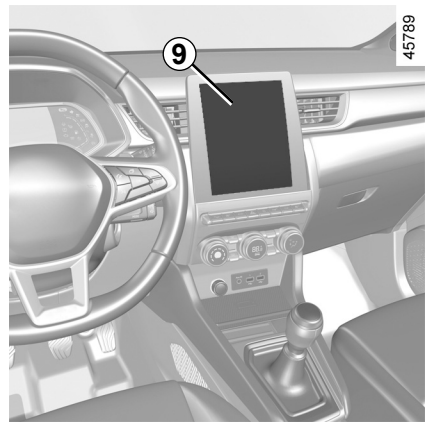

This function also lets you programme the engine to start, in order to heat or ventilate the passenger compartment up to 24 hours before using the vehicle.

Depending on the vehicle, configuration and programming are carried out using the multimedia display ***9***, for more information please refer to the multimedia instructions.

STARTING, STOPPING THE ENGINE: vehicle with card (5/5)

Remote engine start performance varies according to surroundings such as:

– Obstacles, buildings, walls, other vehicles, etc.;

– radio frequency interference (television, radio, mobile phone, other remote controls, etc.);

– Condition of the key/card battery.

In the event that the function is used, please ensure that power-consuming devices (such as the wipers, exterior lights, radio, heated seats, heated steering wheel, etc.) are deactivated and all accessories are disconnected before leaving the vehicle.

Fire hazard.

The remote engine start-up operates if:

– the gearbox is in **P** or **N** position on vehicles fitted with an automatic gearbox;

– the ignition is switched off;

– the bonnet is closed;

– all of the opening elements (doors and luggage compartment) are closed and locked when you leave the vehicle;

– in extreme weather conditions, the remote engine start-up by programming may not work.

If one of these conditions is not met, the lights will flash for approximately 3 seconds.

Do not park the vehicle or run the engine in locations where combustible substances or materials such as grass or leaves can come into contact with the hot exhaust system.

Do not use the engine remote start-up function or its programming when:

– the vehicle is in a garage or in a confined space.

Risk of poisoning or suffocation by exhaust gas emissions.

– the vehicle is covered with a protective cover.

Fire hazard.

– the bonnet is open or before it opens.

Risk of burns or serious injury.

Depending on the country, the remote start function or its programming may be prohibited by law and/or by the regulations in force.

Before using this function, check the legislation and/or the regulations in force for the country.

OVSE23E2

STOP AND START FUNCTION (1/4)

This system enables a reduced fuel consumption and lower greenhouse gas emissions. The system is activated automatically when the vehicle is started. During driving, the system stops the engine (standby) when the vehicle comes to a stop or is moving at a slow speed (depending on the vehicle). The (A) warning light is displayed on the instrument panel.

Conditions of standby at low speed

The vehicle has set off from where it was parked;

For vehicles equipped with automatic gearboxes:
– the gearbox is in position D, M or N;
and
– the brake pedal is depressed (sufficiently hard);

If the (A) warning light flashes, this means that the brake pedal is not sufficiently pressed;
and
– the accelerator pedal is not depressed;
and
– the speed is zero or, depending on the vehicle, as soon as the speed is lower than a threshold specific to the vehicle.

The engine remains on standby if position P is selected, or if position N is selected with the handbrake engaged and the brake pedal released.

For vehicles equipped with manual gearboxes:

– the gearbox is in neutral;
and
– the clutch pedal is released. If the (A) warning light flashes, this means that the clutch pedal must be released completely;
and
– the vehicle speed is lower than a threshold specific to the vehicle.

For all vehicles:

Warning light (A) on the instrument panel is lit when the engine is on standby.

The vehicle equipment remain operational while the engine is stopped.

When the engine switches to standby, the steering assistance may no longer be operational.

In this case it becomes operational again when the engine is no longer on standby or the speed exceeds approximately 1 mph (1 km/h) (downhill, slope etc.).

If the engine is put in standby, the electronic parking brake (depending on the vehicle) is not applied automatically.

Keep your vehicle stationary when the engine is on standby (shown by the warning light (A) on the instrument panel).

The engine MUST be stopped (not put in standby) before leaving the vehicle. ➥ 2.4 ➥ 2.5.

STOP AND START FUNCTION (2/4)

Conditions of standby at high speed

Depending on the vehicle, standby may be activated in freewheel mode ➥ 1.56.

For vehicles equipped with automatic gearboxes:

– the gearbox is in position D or M;

and

– the brake pedal is released;

and

– the acceleration pedal is released.

The warning light Ⓐ on the instrument panel is lit when the engine is on standby.

Preventing the engine from standing by

In certain situations, such as negotiating a crossroads for instance, it is possible (with the system activated) to keep the engine running so as to be ready to move off quickly.

For vehicles equipped with automatic gearboxes:

Keep the vehicle stationary without pressing too hard on the brake pedal.

For vehicles equipped with manual gearboxes:

Keep the clutch pedal pressed right down.

⚠ To fill up with fuel, the engine must be stopped (and not only on standby in the case of vehicles equipped with the STOP and START function): you must switch off the ignition ➥ 2.4 ➥ 2.5. **Fire hazard.**

Conditions for coming out of engine standby

For automatic gearboxes:

– when the driver's door is opened;

or

– when the driver's seat belt is unfastened;
– the brake pedal is released, position D, M or N engaged**;**

or

– position R is engaged**;**

or

– the accelerator pedal is depressed**;**

or

– in manual mode, the gear change paddles are activated.

"AUTOHOLD" function activated ➥ 2.21, the brake pedal may be released and the engine standby maintained.
To exit engine standby, with the brake pedal released, press the accelerator pedal.

OVSE23E2

STOP AND START FUNCTION (3/4)

For manual gearboxes:

– when opening the driver's door, without any gear engaged and the clutch pedal released;

or

– when unfastening the driver's seat belt, without any gear engaged and the clutch pedal released;

or

– the gearbox is in neutral and the clutch pedal is slightly depressed;

or

– the engine is in gear and the clutch pedal is pressed right down.

Special note: depending on the vehicle, if you switch off the ignition when the engine is on standby, the warning light  is displayed for a few seconds on the instrument panel.

For vehicles equipped with a manual gearbox:

the restart may be interrupted if the clutch pedal is released too quickly while a gear is engaged.

Conditions preventing the standby of the engine

Certain conditions prevent the system from using the engine standby function, including when:

– the driver's door is not closed;

– the driver's seatbelt is not fastened;

– reverse gear is engaged;

– the bonnet is not locked;

– the outdoor temperature is too low or too high;

– the battery is not sufficiently charged;

– the difference between the vehicle interior temperature and the automatic climate control instruction is too high;

– parking distance control is in operation;

– the altitude is too high;

– the gradient is too steep for vehicles fitted with an automatic gearbox;

– the "Clear view" function is activated ➥ 3.11 ;

– the engine temperature is too low;

– the emission control system is being regenerated;

– ...

Warning light  is displayed on the instrument panel. This notifies you that engine standby is not available.



Deactivate the Stop and Start function for any operation performed in the engine compartment.

STOP AND START FUNCTION (4/4)

Special feature of the automatic engine re-start

Under certain conditions, the engine can restart on its own in order to guarantee your safety and comfort.
This can occur especially when:

– the outdoor temperature is too low or too high;

– the “Clear view” function is activated ➥ 3.11 ;

– the battery is not sufficiently charged;

– the vehicle speed is above 3 mph (5 km/h) (downhill slope, etc.);

– repeated pressing on the brake pedal or braking system requirement;

– ...

The warning light is displayed on the instrument panel to notify you of automatic engine restarting.

The engine MUST be stopped (not put in standby) before leaving the vehicle. ➥ 2.4 ➥ 2.5.

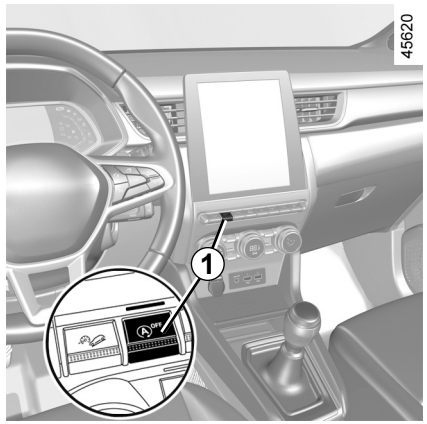

The warning light may appear along with a message on the instrument panel:

– “Optimising Battery Recharge” to prioritise battery charging;
– “Prioritising Thermal Comfort” to prioritise air conditioning;
– “Prioritising running engine” to prioritise engine operations.

Special note: engine on standby, press switch ***1*** to automatically restart the engine.

Deactivating, activating the function

Press ***1*** to deactivate the function. The message “Stop & Start deactivated” appears on the instrument panel and the ignition warning light ***1*** appears.

Pressing again will reactivate the system. The message “Stop & Start Activated” appears on the instrument panel and the ***1*** switch disappears.

The system is automatically reactivated each time the vehicle is started using the start button. ➥ 2.4 ➥ 2.5.

Operating faults

When the “Check Stop & Start” message appears on the instrument panel and the ***1*** switch is on, this indicates that the system is deactivated.

Please consult an authorised dealer.

OVSE23E2

SPECIAL FEATURES OF PETROL VERSIONS (1/2)

The following operating conditions should be avoided:

– driving for long periods when the low fuel level warning light is lit;

– using leaded petrol;

– using lubricant or fuel additives which are not approved.

Or operating faults such as:

– faulty ignition, running out of fuel or disconnected spark plugs resulting in the engine misfiring or cutting out when driving;

– loss of power;

as they may cause the catalytic converter to overheat and thus reduce its efficiency, **or damage it irreparably and cause heat damage to the vehicle.**

If you notice any of the above operating faults, have the necessary repairs carried out as soon as possible by an approved dealer.

These faults may be avoided by regularly taking your vehicle to an approved Dealer at the intervals specified in the Maintenance Document.

Starting problems

To avoid damaging the catalytic converter or the starter, and to prevent premature wearing of the battery, **do not keep** trying to start the engine (using the start button, or by pushing or towing the vehicle) **without having identified and corrected the fault**.

If the fault cannot be identified, do not keep trying to start the engine, but contact an approved Dealer.



Do not park the vehicle or run the engine in locations where combustible substances or materials such as grass or leaves can come into contact with the hot exhaust system.

SPECIAL FEATURES OF PETROL VERSIONS (2/2)

Particle filter

The particle filter is used in the treatment of exhaust gases from petrol engines.
Depending on the vehicle, the warning light  displayed on the instrument panel indicates that the filter is becoming clogged and requires cleaning. To clean it, when the  warning light appears, and as traffic conditions and speed limits allow, drive at between about 31 mph (50 km/h) and 68 mph (110 km/h) until the light goes out.

After between approximately 5 and 20 minutes, the warning light should go out.

Note: the indicator light may go out after 20 minutes if the driving conditions required to clean the filter are not fully met.

If the vehicle is stopped before the warning light disappears you will have to restart the process from the beginning.

If the filter becomes saturated, the  warning light and, depending on the vehicle, the  warning light will appear on the instrument panel, accompanied by the message “Check injection”. In this case, please consult an Authorised Dealer.

If the  warning light and, depending on the vehicle, the  warning light appears, accompanied by the “WARNING: Engine Failure Risk” message, stop the vehicle, switch off the engine and contact an Approved Dealer.



Warning light  requires you to stop immediately, for your own safety, as soon as traffic conditions allow. Switch off the engine and do not restart it. Contact an approved Dealer.

GEAR LEVER, HANDBRAKE

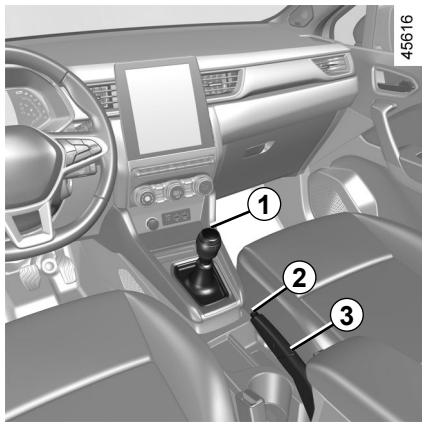

Gear lever

Vehicles with manual gearbox: refer to the grid on the gear lever knob ***1***.

Vehicles with an automatic gearbox: ➥ 2.126.

Selecting reverse gear
The reversing lights will come on as soon as reverse gear is selected with the ignition on.

Handbrake

To release:

Pull the lever ***3*** up slightly, press button ***2*** and then lower the lever to the floor.

The warning light (Ⓟ) on the instrument panel will go out.
The red warning light on the instrument panel will come on if you are driving with an incorrectly released handbrake.

To apply:

Pull lever ***3*** upwards. Check that the vehicle is immobilised. The warning light (Ⓟ) on the instrument panel will come on.

Make sure that the handbrake is fully released when driving (red indicator light off), otherwise overheating, or even damage, may occur.

When stationary and depending on the slope and/or vehicle load, it may be necessary to pull up the handbrake at least two extra notches and engage a gear (1st or reverse gear) on vehicles with a manual gearbox or position **P** on vehicles with an automatic transmission.

An impact to the underside of the vehicle while manoeuvring (e.g.: striking a post, raised kerb or other street furniture) may result in damage to the vehicle (e.g.: deformation of an axle).

To avoid any risk of accident, have your vehicle checked by an approved Dealer.

OVSE23E2

ELECTRONIC PARKING BRAKE (1/4)

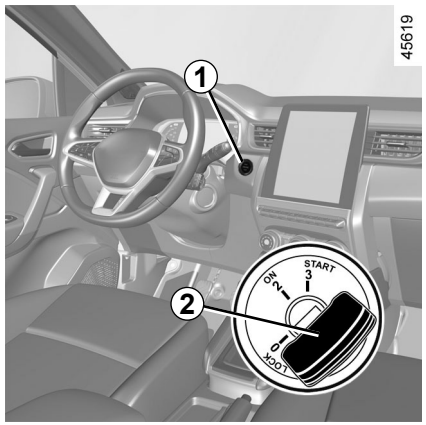

Assisted operation

Applying the electronic parking brake

With the vehicle stationary, the electronic parking brake can be used to immobilise the vehicle:

– **by pressing the engine start/stop button *1* or by turning the ignition key to the *2* "ON" position (2);**

or

– **when the driver's seat belt is unfastened;**

or

– **when the driver's door is opened;**

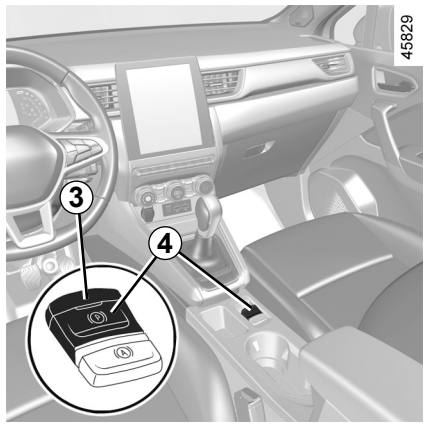

or

– for vehicles fitted with an automatic gearbox, when **position P is engaged.**

In all other instances, for example **the engine has stalled or is in standby due to the Stop and Start** ➥ 2.10, the assisted parking brake is not applied automatically. Manual mode must be used. For certain country-specific model versions, the assisted brake application function is not activated. Refer to the information on "Manual operation".

To confirm that the electronic parking brake is applied, the message "Parking Brake ON" is displayed, the (Ⓟ) warning light appears on the instrument panel and the ***3*** warning light appears on the ***4*** switch.

After the engine is switched off, indicator light ***3*** goes out several minutes after the assisted parking brake has been applied and indicator light (Ⓟ) goes out when the vehicle is locked.

The electronic parking brake can be used to immobilise the vehicle. Before leaving the vehicle, check that the electronic parking brake is fully applied.

Warning light ***3*** on switch ***4*** and warning light (Ⓟ) on the instrument panel illuminate to show that the parking brake is applied but switch off when the doors are locked. Depending on the vehicle, a sticker is located on the upper section of the windscreen to remind you of this.

ELECTRONIC PARKING BRAKE (2/4)

Assisted operation (continued)

Note: in some situations (electronic parking brake failure, manual release of the parking brake, etc.), a beep sounds and the message “WARNING: Apply Parking Brake” appears on the instrument panel to warn you that the electronic parking brake has been released.

– with the engine running: when the driver’s door is opened;

– with the engine switched off (e.g. when the engine stalls): when a front door is opened.

In this case, pull and release switch ***4*** to apply the assisted parking brake.

Assisted release of the parking brake

The brake will be released as soon as the vehicle starts and accelerates.

Manual operation

You can apply the electronic parking brake manually.

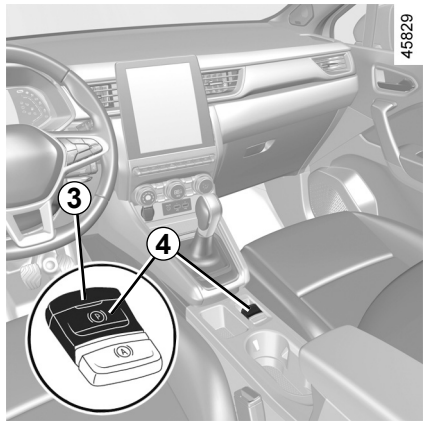

Manually applying the electronic parking brake

Pull switch ***4***. Warning light ***3*** and warning light (Ⓟ) on the instrument panel light up.

Manually releasing the electronic parking brake

Press the ***1*** switch without pressing the pedals or turn the key ***2*** to the “**ON**” position **2** to switch on the vehicle ignition. Press the brake pedal then press switch ***4***: indicator light ***3*** on the switch and indicator light (Ⓟ) displayed on the instrument panel go out.

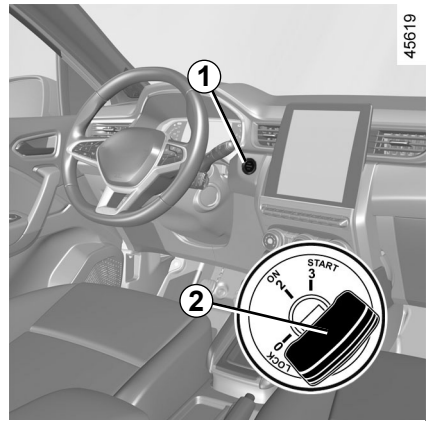

The electronic parking brake can be used to immobilise the vehicle. Before leaving the vehicle, check that the electronic parking brake is fully applied.

Warning light ***3*** on switch ***4*** and warning light (Ⓟ) on the instrument panel illuminate to show that the parking brake is applied but switch off when the doors are locked.

Depending on the vehicle, a sticker is located on the upper section of the windscreen to remind you of this.

ELECTRONIC PARKING BRAKE (3/4)

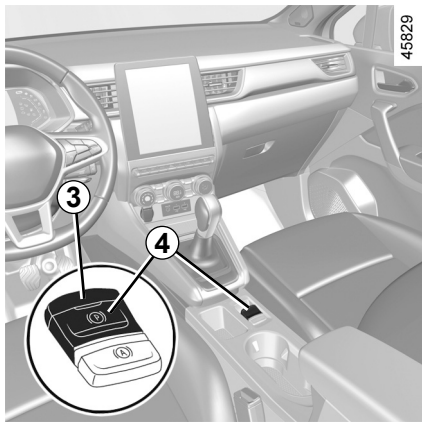

Brief stop

To apply the electronic parking brake manually (when stopping at a red light, or stopping when the engine is running, etc.): pull and release the switch ***4***. The brake is released as soon as the vehicle is started up again.

Special cases

To park on a slope or while towing a trailer, for example, pull switch ***4*** for a few seconds to gain the maximum braking.

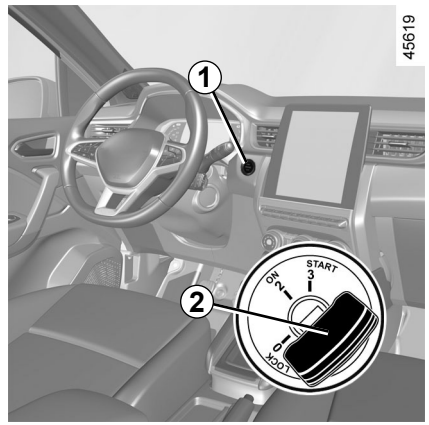

To park the vehicle without applying the electronic parking brake (if there is a risk of freezing, for example):

– engage any gear or the **P** position: the drive wheels will be mechanically locked by the driveshaft;

– switch off the engine by pressing the engine start/stop button ***1*** or by turning the ignition key ***2***;

– release the driver's seat belt;

– open the driver's door;

– manually release the electronic parking brake (please see the information on "Manually releasing the electronic parking brake" on the previous page);

– depending on the vehicle, the electronic parking brake is applied automatically. You will have to release it manually.

ELECTRONIC PARKING BRAKE (4/4)

Versions with an automatic gearbox

For safety reasons, automatic release is deactivated when the driver's door is open or not shut properly and the engine is running (in order to prevent the vehicle from moving without the driver). The "Release Parking Brake Manually" message appears on the instrument panel when the driver depresses the accelerator.

Never leave your vehicle without re-engaging **P** position and switching off the engine. This is because when the vehicle is stationary with the engine running and a gear engaged, the vehicle may begin to move if you accelerate.

There is a risk of accidents.

Operating faults

– If there is a fault, the warning light illuminates on the instrument panel accompanied by the "Check Parking Brake" message and, in some cases, the warning light. Contact your approved Dealer straight away.

– If there is an electronic parking brake fault, the warning light STOP comes on, along with the message "WARNING: Braking System", a beep and, in some cases, the warning light . This means that you must stop as soon as traffic conditions allow.

If no lights or sounds are apparent, this indicates a fault in the instrument panel. This indicates that it is essential to stop immediately (as soon as traffic conditions allow). Ensure that the vehicle is correctly immobilised and contact an approved Dealer.

If the "WARNING: Electric System" or "Check battery" or "WARNING: Braking System" message appears, you must immobilise the vehicle by selecting first gear (on a manual gearbox), engaging **P** position (automatic gearbox) or by pulling the switch ***4*** for approximately 10 seconds.

If the conditions and the slope require it, chock the wheels of the vehicle.

Risk of loss of immobilisation of the vehicle.

Contact an authorised dealer.

“AUTOHOLD” FUNCTION

Vehicle stopped (e.g. at a red light, an intersection, a traffic jam, etc.), the function ensures braking force even when the driver releases the brake pedal.
The braking force is released as soon as the driver accelerates sufficiently with a gear engaged.

Activation

Press switch ***2***.
The ***1*** switch warning light ***2*** illuminates to confirm that the function is activated.

Deactivation

Press the brake pedal and ***2*** switch simultaneously.
The ***1*** switch warning light ***2*** disappears to confirm that the function is deactivated.
If the braking force is maintained, the parking brake is applied automatically when:
– the driver exits the vehicle;
or
– the vehicle is immobilised for more than approximately three minutes.

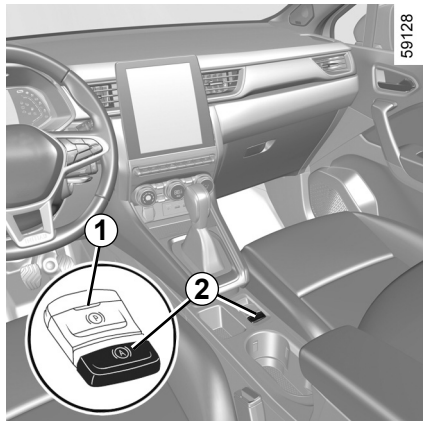

Conditions for maintaining the braking force

The following conditions must be met:
– the seat belt for the driver is fastened;
and
– the electronic parking brake is released;
and
– the vehicle is not stationary on a very steep slope.

The maintained braking force is confirmed by the warning light on the instrument panel.

Conditions for interrupting the braking force

The following conditions must be met:
– the driver accelerates sufficiently with a gear engaged;
or
– the driver disables the function.

Warning light goes out on the instrument panel.

Upon each start-up, the function continues the mode set at the time the engine was last switched off.

The electronic parking brake can be used to immobilise the vehicle. Before leaving the vehicle, check that the electronic parking brake is fully applied.
The indicator light on switch ***2*** and the warning light on the instrument panel illuminate to show that the parking brake is applied and switch off when the doors are locked. Depending on the vehicle, a sticker is located on the upper section of the windscreen to remind you of this.

DRIVING ADVICE, ECO DRIVING (1/8)

Fuel consumption is accredited in accordance with a standard regulatory method.

Identical for all manufacturers, this enables vehicles to be compared with one another.

Consumption in real time depends on vehicle usage conditions, the equipment fitted and the user's driving style.

To optimise fuel consumption, please refer to the following advice.

Depending on the vehicle, you will have various functions which enable you to lower your fuel consumption:

– the rev counter;
– gear change indicator;
– the driving style indicator;
– the journey record and eco-driving advice via the multimedia screen;
– acceleration indicator Eco;
– ECO mode;
– the free-wheel function;
– the Stop and Start function ➥ 2.10.

If fitted on the vehicle, the navigation system provides additional information.

DRIVING ADVICE, ECO DRIVING (2/8)

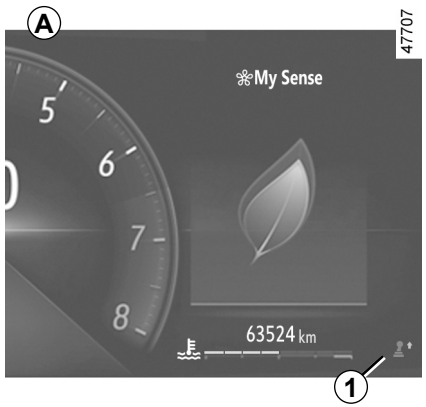

On the instrument panel *A*, *B* or *C*

Depending on the vehicle, the information display can be organised and customised based on the instrument panel customisation style selected from the multimedia screen.

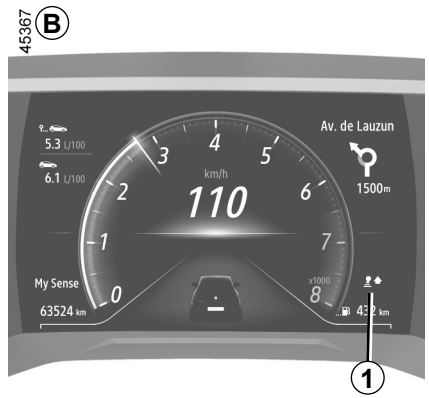

Gear change indicator *1*

Depending on the vehicle, to obtain optimum consumption levels, a warning light on the instrument panel lets you know the best time to move up or down a gear:

shift up a gear;

downshift a gear.

If you regularly follow this indicator, you will reduce your vehicle's fuel consumption.

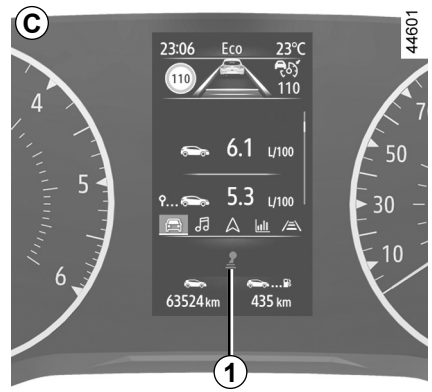

DRIVING ADVICE, ECO DRIVING (3/8)

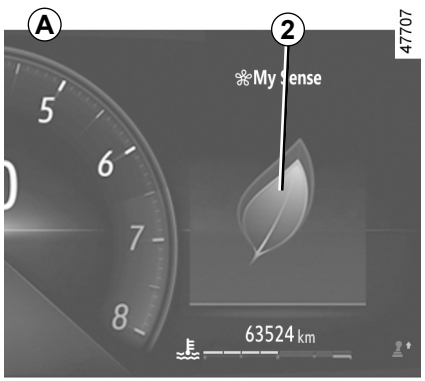

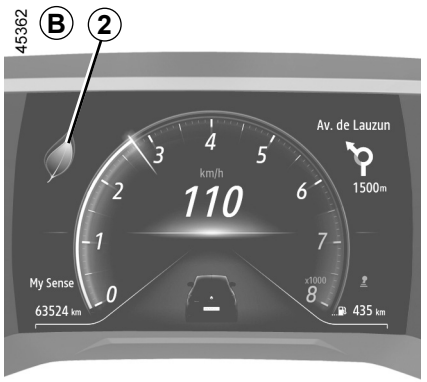

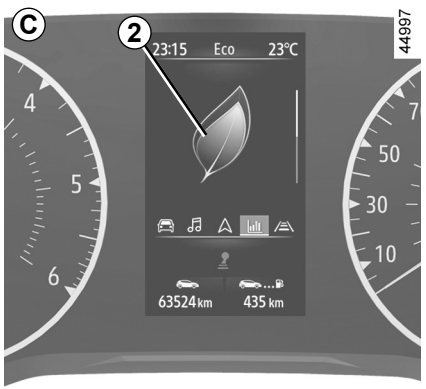

Driving style indicator *2*

Informs you about the driving style adopted in real time. This is shown by indicator light ***2***.

The more petals displayed on ***2***, the more your driving is flexible and economical.

If you regularly monitor this indicator, you will reduce your vehicle's fuel consumption.

Please refer to the multimedia instructions for further information.

DRIVING ADVICE, ECO DRIVING (4/8)

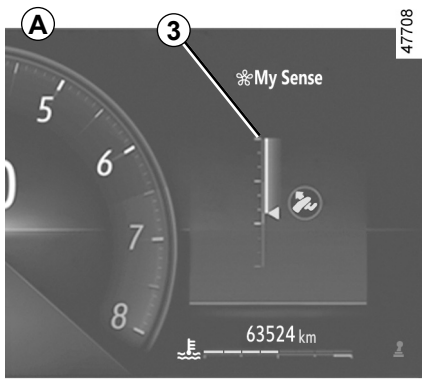

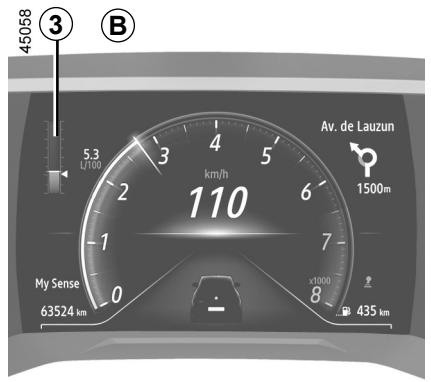

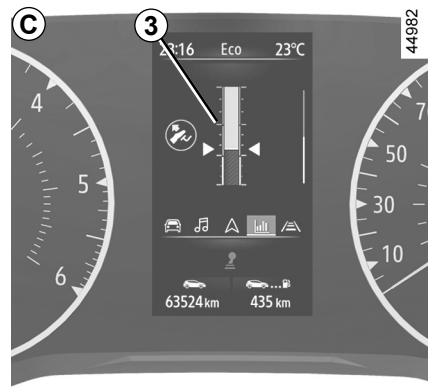

Acceleration indicator Eco *3*

This informs you in real time whether you are accelerating moderately or strongly.

This is shown by the ***3*** warning light:

– green: acceleration is moderate and correct;

– white: acceleration is too high;

– grey: acceleration is high.

Note: it is not possible to simultaneously display the driving style indicator ***2*** and the Eco acceleration indicator ***3***.

DRIVING ADVICE, ECO DRIVING (5/8)

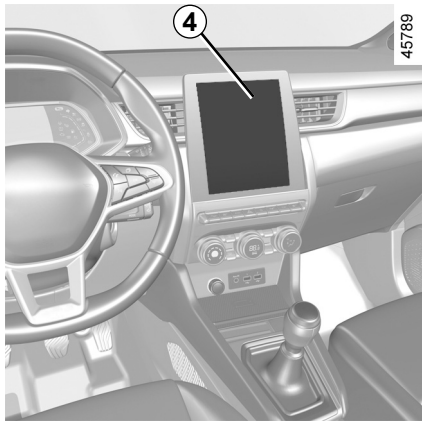

On the multimedia screen

Journey record

Once the engine is switched off, you will see “Journey record” displayed on the multimedia screen ***4***, enabling you to view information on your last journey.

This indicates:

– the general score;

– score evolution;

– distance without fuel consumption.

An overall rating from 0 to 100 is displayed to let you assess your eco driving performance.

The higher the rating, the lower the fuel consumption.

Eco advice is given to help improve your performance.

With your favourite journeys saved, you can compare your performance between trips and the performance of other vehicle users.

Please refer to the multimedia instructions for further information.

DRIVING ADVICE, ECO DRIVING (6/8)

ECO mode

ECO mode is a function which optimises fuel consumption.

It affects certain driving operations (acceleration, shifting gears, cruise control, deceleration, etc.).

Limiting acceleration enables low fuel consumption in urban and surrounding areas.

Activating the function

Depending on the vehicle, the function can be activated either:

– by pressing switch ***5***;

– by pressing the ***6*** switch. ➥ 3.2;

– from the multimedia screen (refer to the multimedia instructions).

The warning light ECO comes on on the instrument panel to confirm activation.

While driving, it is possible to leave the ECO mode temporarily in order to improve engine performance.

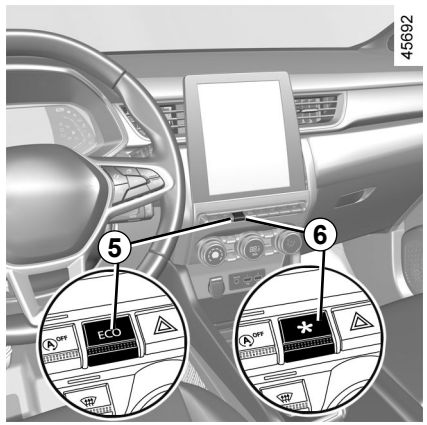

To do this, press the accelerator pedal firmly and fully.

ECO mode is reactivated when you take pressure off the accelerator pedal.

Disabling the function

Depending on the vehicle, the function can be deactivated either:

– by pressing switch ***5***;

– by pressing the ***6*** switch. ➥ 3.2.

The warning light ECO goes out on the instrument panel to confirm deactivation.

Free-wheel function

Depending on the vehicle, for vehicles fitted with an automatic gearbox, in the deceleration phases (with the foot fully off the accelerator pedal), switching to freewheeling (automatic neutral) decreases engine braking and allows you to farther without accelerating in order to save fuel.

The freewheel warning light illuminates when the “Freewheel” parameter is activated (ON) in the user settings ➥ 1.80.

This warning light is displayed when the function is activated:

– in grey when the vehicle is not in freewheel mode;

– in green or, depending on the vehicle, when the vehicle is in freewheel mode (automatic neutral).

Note: depending on the vehicle, for vehicles equipped with MULTI-SENSE ➥ 3.2, activation/deactivation is done by configuring the various My Sense modes or ECO mode.

DRIVING ADVICE, ECO DRIVING (7/8)

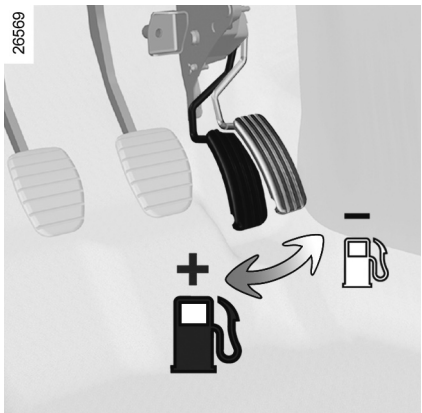

Driving advice and ECO driving

Heating levels

It is normal to notice an increase in the vehicle's fuel consumption when using the heating (particularly when the outside temperature drops below zero) or air conditioning.

Behaviour

– Drive carefully for the first few miles until the engine reaches its normal operating temperature, rather than let it warm up while the vehicle is stationary.

– High speeds significantly affect the vehicle's fuel consumption.

  Examples (at a steady speed):

  – reducing the speed from 80 mph (130 km/h) to 68 mph (110 km/h) approximately saves up to 20% of fuel approximately;

  – reducing the speed from 56 mph (90 km/h) to 50 mph (80 km/h) approximately saves up to 10% of fuel approximately.

– Dynamic driving involving heavy and frequent acceleration and braking is expensive on fuel in comparison to the time saved.

– Do not over rev the engine in the intermediate gears. You should always use the highest gear possible.

– Avoid sudden acceleration.

– Brake as little as possible. If you anticipate an obstacle or bend in advance, you may then simply release the accelerator pedal.

– Do not try to maintain the same speed up a hill, accelerate no more than you would on flat ground. Keep your foot in the same position on the accelerator pedal.

– Double declutching and accelerating before switching off are unnecessary in modern vehicles.

– Bad weather, flooded roads:



Do not drive through floods if the water is above the lower edge of the wheel rims.



Obstructions to the driver

On the driver's side, only use mats suitable for the vehicle, attached with the pre-fitted components, and check the fitting regularly. Do not lay one mat on top of another.

There is a risk of wedging the pedals.

DRIVING ADVICE, ECO DRIVING (8/8)

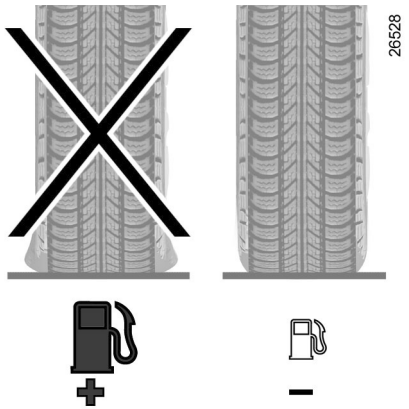

Tyres

– An underinflated tyre increases fuel consumption.

– To optimise fuel consumption, set the highest speed tyre pressure or the recommended pressure indicated on the edge of the driver's door ➥ 4.11.

– The use of non-recommended tyres can increase fuel consumption.

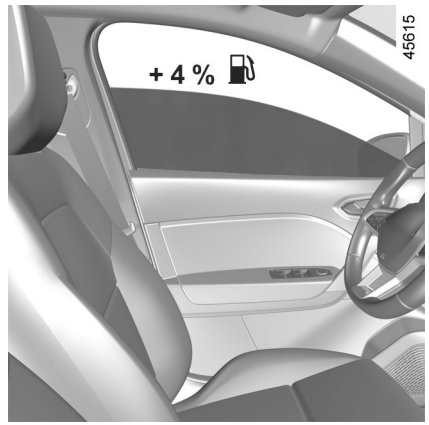

Advice on use

– Favour the ECO mode.

– Electricity is fuel; switch off all the electrical components which are not really needed. **However** (safety first), keep your lights on when the visibility is bad ("see and be seen").

– Use the air vents. Driving with the windows open at 60 mph (100 km/h) will increase fuel consumption by 4%.

– Never fill the fuel tank right to the brim to avoid overflow.

– **On vehicles equipped with non-automatic air conditioning**, switch off the air conditioning when it is not required.

Advice for reducing consumption and therefore helping to preserve the environment:
If the vehicle has been parked in the sun, open the doors for a few moments to let the hot air escape before starting the engine.

– Do not leave an empty roof rack fitted to the vehicle.

– It is better to fit a trailer for bulky objects.

– When towing a caravan, fit a wind deflector and adjust it carefully.

– Avoid using the car for door-to-door calls (short journeys with long waits in between) because the engine never reaches its normal operating temperature.

MAINTENANCE AND ANTIPOLLUTION ADVICE

Your vehicle complies with criteria for recycling and recovering vehicles at the end of their service life, which entered into force in 2015.

Some parts of your vehicle have therefore been designed to facilitate future recycling.

These parts are easy to remove so that they can be recovered and reprocessed by recycling companies.

By virtue of its design, moderate fuel consumption and initial settings, your vehicle also conforms to current antipollution regulations. The manufacturer is actively striving to reduce pollutant exhaust gas emissions and to save energy. But the fuel consumption of your vehicle and the level of pollutant exhaust gas emissions are also your responsibility. Ensure that it is maintained and used correctly.

Maintenance

It is important to remember that failure to respect antipollution regulations could lead to legal action being taken against the vehicle owner.

In addition, replacing engine, fuel supply system and exhaust components with parts other than those originally recommended by the manufacturer may alter your vehicle so that it no longer complies with anti-pollution regulations.

Have your vehicle adjusted and checked by an authorised dealer, in accordance with the instructions given in your maintenance schedule: they will have all the equipment necessary for ensuring that your vehicle is maintained to its original standard.

Engine adjustments

– **Spark plugs:** for optimum conditions of use, output and performance the specifications laid down by our Design Department must be strictly applied.
If the spark plugs have to be changed, use the make, type and gap specified for your vehicle's engine. Contact an authorised dealer for this.
– **Ignition and idle speed:** no adjustment is needed.
– **Air filter, fuel filter:** a choked element will reduce efficiency. It must be replaced.

Exhaust gas monitoring system

The exhaust gas monitoring system will detect any operating faults in the vehicle's antipollution system.
If this system malfunctions, toxic substances may be released into the atmosphere or damage may occur.



This warning light on the instrument panel will indicate if there are any faults in the system:
This lights up when the ignition is switched on and goes out when the engine is started.
– If it lights up continuously, consult an approved Dealer as soon as possible;
– if it flashes, reduce the engine speed until the light stops flashing. Contact an authorised dealer as soon as possible.

ENVIRONMENT

Your vehicle has been designed with respect for the **environment** in mind for its entire service life: during production, use and at the end of its life.

Manufacture

Your vehicle has been manufactured at a factory which complies with a policy to reduce the environmental impact on the surrounding areas (reduction of water and energy consumption, visual and noise pollution, atmospheric emissions and waste water; sorting and reusing waste).

Emissions

Your vehicle has been designed to emit fewer greenhouse gases (CO_2) while in use, and therefore to consume less fuel (eg. 140 g/km, equivalent to 5.3 l/100 km for a diesel vehicle).

Our vehicles are also equipped with a particle filter system including a catalytic converter, an oxygen sensor and an active carbon filter (the latter prevents vapour from the fuel tank being released into the open air).

Please make your own contribution towards protecting the environment too

– Worn parts replaced in the course of routine vehicle maintenance (vehicle battery, oil filter, air filter, batteries, etc.) and oil containers (empty or filled with used oil) must be disposed of through specialist organisations.

– At the end of the vehicle's service life, it should be sent to approved centres to ensure that it is recycled.

– In all cases, comply with local legislation.

Recycling

Your vehicle is 85% recyclable and 95% recoverable.

To achieve these objectives, many of the vehicle components have been designed to enable them to be recycled. The materials and structures have been carefully designed to allow these components to be easily removed and reprocessed by specialist companies.

In order to preserve raw material resources, this vehicle incorporates numerous parts made from recycled plastics or renewable materials (vegetable or animal-derived materials such as cotton or wool).

TYRE PRESSURE LOSS WARNING (1/6)

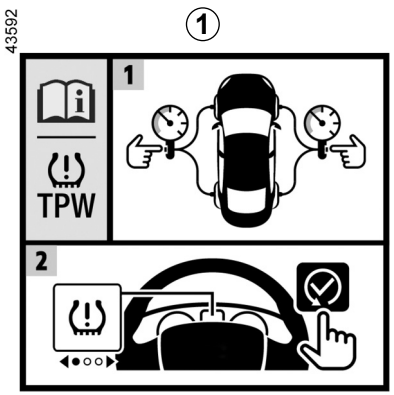

When fitted to the vehicle, this system notifies the driver if one or more tyres lose pressure.

The system can be identified by the ***1*** label in the vehicle.



Operating principle

This system detects a loss of pressure in one of the tyres by measuring the wheel speed while driving.

Warning light  ***2*** comes on to alert the driver in the event of insufficient pressure (deflated wheel, punctured tyre, etc.).



TYRE PRESSURE LOSS WARNING (2/6)

Operating conditions

The system should be reset with a pressure equal to that stated on the tyre pressure label (refer to the information on “Tyre Pressures” in section 4), otherwise it may not give a reliable warning in the event of significant pressure loss.

Resetting should always be carried out after checking the tyre pressure of all four tyres when cold.

In the following situations, the system risk coming into action late or not functioning correctly:

– system not reset after reinflation or any operation on the wheels;
– system badly reset: different inflation pressures from the recommended pressures;
– significant change in load or distribution of load on one side of the vehicle;
– sporty driving with strong acceleration;
– driving on snowy or slippery surface;
– driving with snow chains;
– fitting a single new tyre;
– use of tyres not approved by the network.

The sudden loss of pressure in a tyre (burst tyre, etc.) cannot be detected by the system.

Resetting the standard level for the tyre pressures

This should be done:

– after each re-inflation or resetting of tyre pressure;
– after changing a wheel;
– after changing wheels around.

Tyre pressures must correspond to the current usage of the vehicle (empty, carrying a load, motorway driving, etc.).

This function is an additional driving aid.

The function does not take the place of the driver. It cannot, therefore, under any circumstances replace the vigilance or the responsibility of the driver. Check the tyre pressures, including the emergency spare wheel, once a month.

OVSE23E2

TYRE PRESSURE LOSS WARNING (3/6)

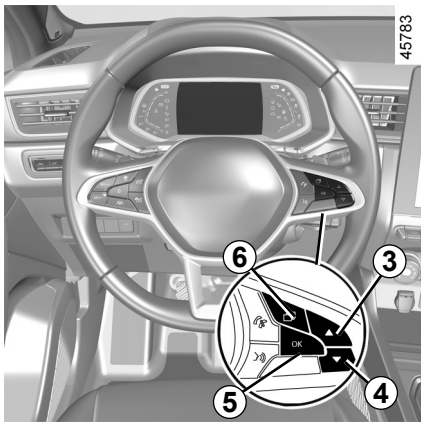

Resetting procedure

Ignition on, **vehicle stopped:**

– for vehicles fitted with a type ***A*** or ***C*** instrument panel ➥ 1.69, repeatedly tap the ***6*** switch as many times as necessary to reach the “vehicle” tab ;

– for vehicles fitted with a type ***B*** instrument panel, tap the switch ***6*** to reach the ***7*** area of the instrument panel;



– briefly press the ***3*** or ***4*** switch to reach the “Tyre pressure init. long press” page;

– press and hold the ***5*** **OK** switch to launch the reset.

Hold down the ***5*** switch until the “Operation completed” message appears. You can now drive.

If the vehicle is equipped with a navigation system, the resetting procedure may also be carried out using the multimedia screen: please see the equipment instructions.

OVSE23E2

TYRE PRESSURE LOSS WARNING (4/6)

The table below shows the possible messages related to the tyre resetting procedure.

Steps	Messages	Readings
–	Tyre pressure init. at stop	The message is displayed during driving. If you want to reset the pressure of the four tyres, stop the vehicle.
1	Tyre pressure init. long press	To reset the pressure of all four tyres, with the vehicle stopped, press and hold the ***5*** OK switch to launch resetting until the “If pressure OK [hold on]” message is displayed.
2	If pressure OK [hold on]	The message flashes to indicate that the system has registered the resetting procedure. If all four tyres have been correctly adjusted to match the tyre pressure values recommended on the tyre pressure label ➥ 4.11, press and hold switch ***5*** OK until the message “Operation completed” appears.
3	Operation completed	The resetting procedure has been completed successfully. You can now drive.

TYRE PRESSURE LOSS WARNING (5/6)

Readjustment of tyre pressures

The pressure of the four tyres must be set when cold (refer to the label located on the edge of the driver's door).

If tyre pressures cannot be checked when the tyres are **cold**, the recommended pressures should be increased by **0.2** to **0.3** bar (**3** PSI).
Never deflate a hot tyre.
After each reinflation or readjustment of the tyre pressure, launch the reinitialisation of the tyre pressure reference value.

Replacing wheels/tyres

Only use equipment approved by the network, otherwise the system risks late activation or incorrect operation. ➥ 5.12.

After each change of wheel/tyre, readjust the tyre pressure and launch the reset of the tyre pressure reference value.

Emergency spare wheel

If fitted on the vehicle, readjust the tyre pressure and launch the reinitialisation of the tyre pressure reference value.

Tyre repair product and inflation kit

Only use equipment approved by the Network, otherwise the system risks late activation or incorrect operation. ➥ 5.4. After using the tyre inflation kit, readjust the tyre pressure and launch the resetting of the tyre pressure reference value.

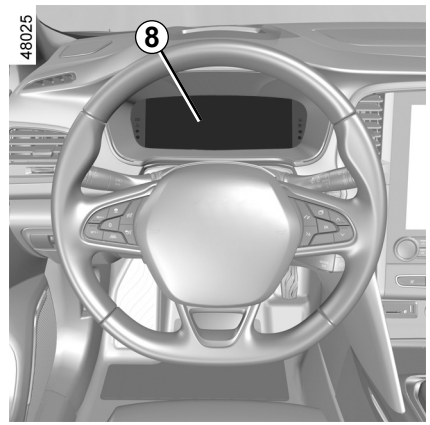

Tyre pressure faults

The table on the following page lists the warning messages which appear on the instrument panel ***8*** when the system detects a tyre pressure fault.

TYRE PRESSURE LOSS WARNING (6/6)

The information on the instrument panel signals any potential tyre pressure faults (e.g. deflated or punctured tyre).

Indicator lights	Messages	Readings
	Inflate tyres and init.	This indicates that tyre under-inflation or puncture has been detected. Check and adjust the pressure of the four tyres when cold and reset the system.
	Check tyre press and init.	This indicates that the reset has been unsuccessful. Check and readjust the tyre pressure before re-launching the resetting procedure.
	Check tyre press and init.	This indicates that the last system reset was carried out over 6 months ago or over approximately 6,214 miles (10,000 km). Check and readjust the tyre pressure before re-launching another resetting procedure.
	Check TPW	This indicates a fault in the system. Consult an approved dealer.
	TPW not available	This indicates that an emergency spare wheel different in size to the other four wheels has been fitted to the vehicle. The system remains unavailable until a wheel identical in size to the other wheels has been fitted and the resetting procedure has been carried out.

DRIVING CORRECTION DEVICES AND AIDS (1/5)

Depending on the vehicle, this is composed of:

- **anti-lock braking system (ABS);**
- **electronic stability program (ESC) with understeer control and traction control;**
- **emergency brake assist;**
- **hill start assistance.**

Other driving assistance systems are detailed on the following pages.

These functions are an additional aid in the event of critical driving conditions, enabling the vehicle behaviour to be adapted to suit the driving conditions.

These functions do not take the place of the driver. **They do not increase the vehicle's limits and should not encourage you to drive more quickly.** Under no circumstances should they replace the vigilance or responsibility of the driver when manoeuvring the vehicle (the driver must always be ready for sudden incidents which may occur when driving).

Anti-lock braking system (ABS)

Under heavy braking, the ABS prevents the wheels from locking, allowing the stopping distance to be managed and keeping control of the vehicle.
In these circumstances, the vehicle can be steered to avoid an obstacle whilst braking. In addition, this system can increase stopping distances, particularly on roads with low surface grip (wet ground etc.).
You will feel a pulsation through the brake pedal each time the system is activated. The ABS does not in any way improve the vehicle's physical performance relating to the road surface and road-holding. It is still **essential** to follow the rules of good driving practice (such as driving at a safe distance from the vehicle in front etc.).

In an emergency, apply **firm and continuous pressure** to the brake pedal. There is no need to pump it repeatedly. The ABS will modulate the force applied in the braking system.

OVSE23E2

DRIVING CORRECTION DEVICES AND AIDS (2/5)

Operating faults:

–  and  lit up on the instrument panel accompanied by the messages “Check ABS”, “WARNING: Check Braking System” and “Check ESC”: this indicates that the ABS, the ESC and the emergency brake assist are disabled. **Braking is always enabled**;

– , ,  and  lit on the instrument panel accompanied by the message “WARNING: Braking System”: **this indicates a fault with the braking system.**

In both cases, please consult an Authorised Dealer.



Your braking system is partially operational. However, **it is dangerous to brake suddenly** and it is essential to stop immediately, as soon as traffic conditions allow. Call an approved Dealer.

OVSE23E2

DRIVING CORRECTION DEVICES AND AIDS (3/5)

Electronic stability program (ESC) with understeer control and traction control

Electronic stability program ESC

This system helps you to keep control of the vehicle in critical driving conditions (avoiding an obstacle, loss of grip on a bend, etc.).

Operating principle

A sensor in the steering wheel detects the direction selected by the driver.

Other sensors fitted throughout the vehicle measure the actual direction.

The system compares the direction selected by the driver and the actual direction of the vehicle and corrects this as necessary by braking certain wheels and/or acting on the engine power.

If the system is triggered, the  warning light flashes on the instrument panel.

Understeer control

This system optimises the action of the ESC in the case of pronounced understeering (loss of front axle road holding).

Traction control

This system helps to limit wheelspin of the drive wheels and to control the vehicle when pulling away, accelerating or decelerating.

Operating principle

Using the wheel sensors, the system measures and compares the speed of the drive wheels at all times and slows down their over-rotation. If a wheel is starting to slip, the system brakes automatically until the drive supplied becomes compatible with the level of grip under the wheel again.

The system also adjusts the engine speed to the grip available under the wheels, independently of the pressure exerted on the accelerator pedal.

In some situations (driving on very wet ground: snow, mud, etc. or driving with snow chains fitted), the system may reduce the engine output to limit wheelspin.

Operating faults

When the system detects an operating fault the message “Check ESC” and warning lights  and  appear on the instrument panel. In this case, the ESC and traction control system are deactivated.

Consult an approved dealer.

DRIVING CORRECTION DEVICES AND AIDS (4/5)

Emergency brake assist

This system supplements the ABS and helps reduce vehicle stopping distances.

Operating principle

The system enables detection of an emergency braking situation. In this case, the braking system immediately develops maximum power and may trigger ABS regulation.

ABS braking is maintained as long as the brake pedal is applied.

Brake lights come on

Depending on the vehicle, these may flash in the event of sudden deceleration.

Braking anticipation

Depending on the vehicle, when you rapidly release the accelerator, the system anticipates the braking manoeuvre in order to reduce stopping distances.

Special cases

When using the cruise control:

– if you use the accelerator, when you release it, the system may be triggered;

– if you do not use the accelerator, the system will not be triggered.

Operating faults

When the system detects an operating fault the message “WARNING: Check Braking System” appears on the instrument panel along with the warning light.

Consult an approved dealer.



These functions are an additional aid in the event of critical driving conditions, enabling the vehicle behaviour to be adapted to suit the driving conditions.

These functions do not take the place of the driver. **They do not increase the vehicle’s limits and should not encourage you to drive more quickly.** Under no circumstances should they replace the vigilance or responsibility of the driver when manoeuvring the vehicle (the driver must always be ready for sudden incidents which may occur when driving).

DRIVING CORRECTION DEVICES AND AIDS (5/5)

Hill start assistance

Depending on the gradient of the incline, this system assists the driver when starting on a hill. It prevents the vehicle from rolling backwards by automatically applying the brakes when the driver lifts his/her foot off the brake pedal to depress the accelerator pedal.

System operation

It only operates when the gear lever is in a position other than neutral (other than **N** or **P** on automatic gearboxes) and the vehicle is completely stationary (brake pedal depressed).

The system holds the vehicle for approximately **2 seconds**. The brakes are then gradually released (the vehicle will move according to the slope).

The hill start assistance system cannot completely prevent the vehicle from rolling backwards in all situations (extremely steep gradients etc.).

In all cases, the driver may depress the brake pedal to prevent the vehicle from rolling backwards.

The hill start assistance function should not be used for prolonged stops: use the brake pedal.

This function is not designed to immobilise the vehicle permanently.

If necessary, use the brake pedal to stop the vehicle.

The driver must remain particularly vigilant when driving on slippery or low-grip surfaces.

Risk of serious injury.

OVSE23E2

LANE DEPARTURE WARNING (1/5)

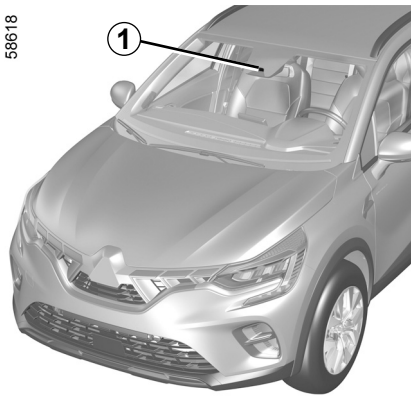

Using information from the ***1*** camera, the function warns the driver when a continuous or broken line is crossed or when approaching the roadside (divider, barrier, pavement, embankment, etc.) without the direction indicator lights being activated.

Location of the camera *1*

Make sure the windscreen is not obscured (dirt, mud, snow, condensation etc.).

This function is an additional driving aid. This function is not under any circumstances intended to replace the due care and attention of the driver, who should at all times be in control of the vehicle.

The lane departure warning function does not correct the vehicle's trajectory.

OVSE23E2

LANE DEPARTURE WARNING (2/5)

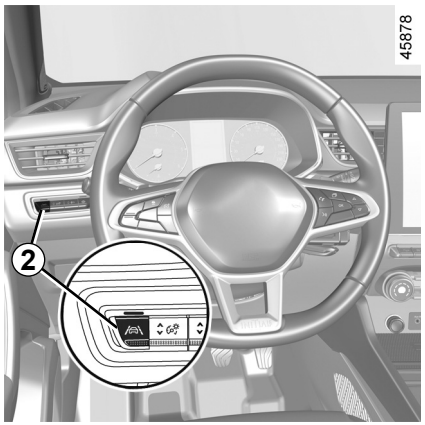

Activation/deactivation

To activate the function, press the ***2*** switch as many times as required to select “Lane Departure Warning” on the instrument panel. The “Lane departure warning on” message and “ ” warning light are displayed on the instrument panel.

To disable the function, press the ***2*** switch as many times as required to select “Lane departure warning off” (or, depending on the vehicle “Lane Keeping deactivated”) on the instrument panel. Warning light goes out on the instrument panel.

Operation

When the function is activated, the warning light and the left and right lines ***3*** are displayed in grey on the instrument panel.

The function is set to notify the driver if:

– speed is between approximately 43 mph (70 km/h) and 112 mph (180 km/h);

and

– the warning light and left/right line indicators ***3*** are coloured white.

The warning function is triggered if the vehicle breaches a line or approaches a roadside (divider, barrier, pavement, embankment, etc.) without the direction indicator lights being activated.

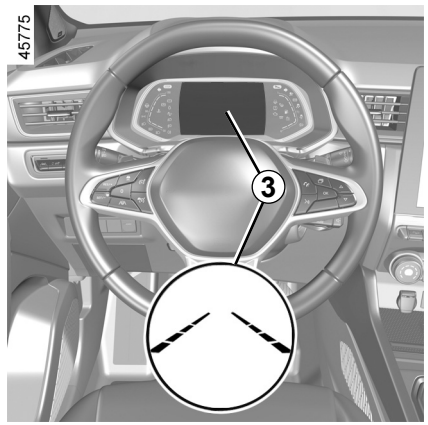

The function alerts the driver:

– by a vibration in the steering wheel;

and

– the warning light and ***3*** the indicator for the crossed line turn red.

Each time the vehicle is started, the function continues the mode saved the last time the engine was stopped.

LANE DEPARTURE WARNING (3/5)

Temporarily not available

– very fast lane departure;
– driving continuously on a line;
– four seconds approximately after changing lanes;
– tight bends;
– impaired visibility;
– activation of one of the direction indicator lights;
– strong acceleration;
– ...

When the function is not available, the  warning light and the left/right indicators turn to grey on the instrument panel.

Conditions for non-activation of the system

The system cannot be activated when:

– reverse gear is engaged;
– the field of vision of the camera is obstructed;
– the STOP warning light is displayed.

The  warning light and the left/right line indicators turn to grey on the instrument panel.

Adjustment

Vehicles fitted with a multimedia screen.

To access the multimedia screen function settings ***4***, refer to the multimedia instructions:

– “Vibration”: adjust the steering wheel vibration level;

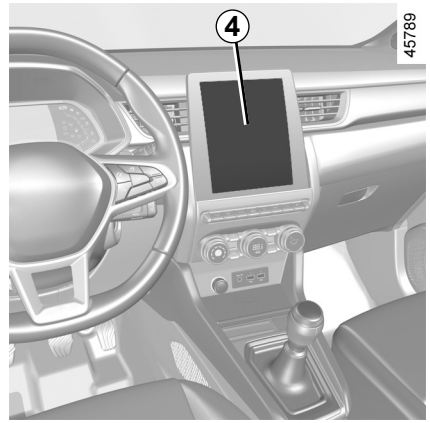

– “Alert”: adjust the line detection sensitivity level. To do this select:
  – “Late”: line detected when crossing;
  – “Standard”: line detected on approach;
  – “Early”: line detected nearby.

Please refer to the multimedia instructions for further information.

LANE DEPARTURE WARNING (4/5)

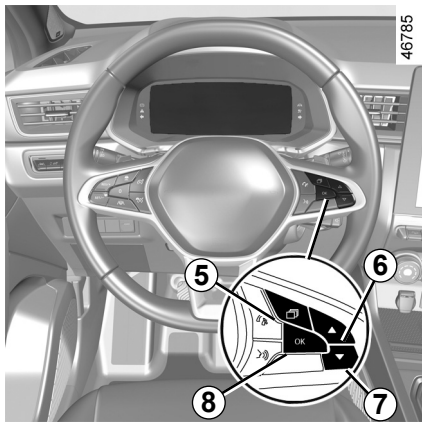

Adjustments (continued)

Vehicles not fitted with a multimedia screen

– With the vehicle stopped, press the switch ***5*** as many times as required to reach the “Vehicle” tab;

– press the ***6*** or ***7*** control repeatedly to reach the “Settings” menu. Press the switch ***8*** **OK**;

– press control ***6*** or ***7*** repeatedly to reach the “DRIVING ASSIST” menu. Press the switch ***8*** **OK**;

– press the ***6*** or ***7*** control repeatedly to reach the “Lane Departure Sensitivity” or “Lane Departure Vibration” menu. Press the switch ***8*** **OK**;

– press the ***6*** or ***7*** control repeatedly to adjust the setting. Press the ***8*** **OK** button.

Operating faults

In the event of a malfunction, the left and right line indicators (and, depending on display style, the  warning light) disappear or stay grey on the instrument panel.

In some cases, they are accompanied by the message “Check Front camera” or the  warning light on the instrument panel.
Consult an approved dealer.

LANE DEPARTURE WARNING (5/5)

This function is an additional driving aid. This function is not under any circumstances intended to replace the due care and attention of the driver, who should at all times be in control of the vehicle.

System servicing/repairs

– In the event of an impact, the camera alignment may be changed, and its operation may consequently be affected. Deactivate the function, then consult an authorised dealer.
– Any work in the area where the camera is located (repairs, replacements, windscreen modifications etc.) must be carried out by a qualified professional.

Only an authorised dealer is qualified to service the system.

In the event of system disturbance

Some conditions can disturb or damage the operation of the system, such as:
– windscreen obscured (by dirt, ice, snow, condensation etc.);
– a complex environment (tunnel etc.);
– poor weather conditions (snow, rain, hail, black ice etc.) ;
– poor visibility (night, fog etc.);
– the road markings are irregular or difficult to distinguish (e.g. partially erased, excessive spacing, distorted road surface) ;
– being dazzled (glaring sun, lights of vehicles travelling in the opposite direction etc.);
– the road is narrow, winding or undulating (tight bends etc.);
– closely following a vehicle travelling in the same lane.

Risk of false alarms or absence of warnings

LANE KEEPING ASSIST (1/6)

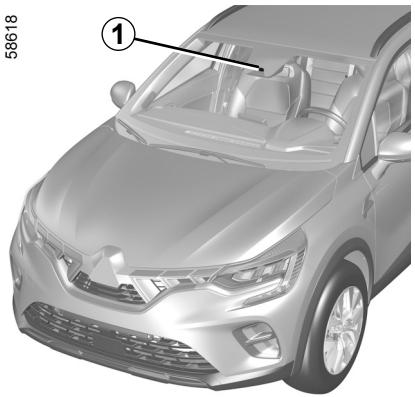

Using information from the ***1*** camera, the function triggers corrective action on the vehicle steering system when a continuous or broken line is crossed or when approaching the roadside (divider, barrier, pavement, embankment, etc.) without the direction indicator lights being activated.

You can **retake control of the vehicle** at any time by operating the steering wheel.

Location of the camera *1*

Make sure the windscreen is not obscured (dirt, mud, snow, condensation etc.).

This function is an additional driving aid. This function is not under any circumstances intended to replace the due care and attention of the driver, who should at all times be in control of the vehicle.

OVSE23E2

LANE KEEPING ASSIST (2/6)

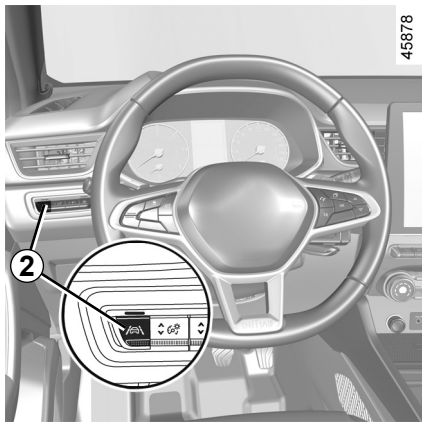

Activation/deactivation

To activate the function, press the ***2*** switch as many times as required to select “Lane Keeping Assist” on the instrument panel.

The “Lane Keeping activated” message and “ ” warning light are displayed on the instrument panel.

When Lane Keeping Assist is activated, the “Lane Departure Warning” function is automatically activated. ➥ 2.43.

To disable the function, press the ***2*** switch as many times as required to select “Lane Keeping deactivated” on the instrument panel.

Warning light goes out on the instrument panel.

Note: deactivating the “Lane Keeping Assist” function causes deactivation of the “Lane Departure Warning” function.

Each time the vehicle is started, the function continues the mode saved the last time the engine was stopped.

OVSE23E2

LANE KEEPING ASSIST (3/6)

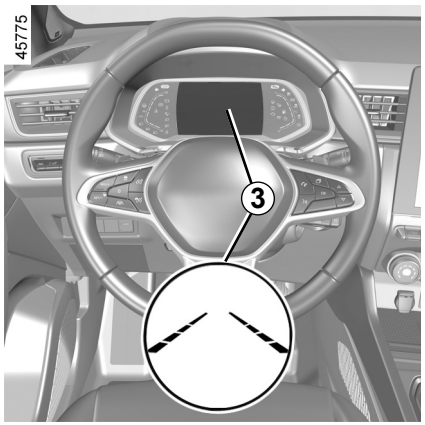

Operation

When the function is activated, the warning light and the left and right lines ***3*** are displayed in grey on the instrument panel.

The function is set to operate when the vehicle speed is between approximately 43 mph (70 km/h) and 112 mph (180 km/h) and if the warning light and left-hand and right-hand line indicators ***3*** appear in white.

The function operates if the vehicle breaches a line or if the vehicle approaches the roadside (divider, barrier, pavement, embankment, etc.) without the direction indicator lights being activated.

In these cases:

– the function triggers an action on the vehicle's steering system to correct the vehicle trajectory;

– the warning light and the indicator ***3*** on the side of the breached line turns to yellow on the instrument panel.

Note: on bends, the function allows for slightly cutting the bend.

If the corrective action on the steering system is not sufficient, the warning light and the indicator ***3*** on the side of the breached line turn to red on the instrument panel, accompanied by a vibration on the steering wheel.

Special cases

When using the function:

– If the system can no longer detect any action by the driver on the steering wheel, the warning light appears in yellow on the instrument panel, accompanied by the message "Keep hands on steering wheel" and an audible warning.

The audible warning is emitted along with the warning light and message until the driver takes control;

– if the system is active for too long, an audible warning is emitted and the indicator ***3*** on the side of the line concerned flashes until the driver takes control.

You can interrupt the trajectory correction at any time by moving the steering wheel.

LANE KEEPING ASSIST (4/6)

Temporarily not available

– Very fast lane departure;
– driving continuously on a line;
– four seconds approximately after changing lanes;
– tight bends;
– impaired visibility;
– activation of one of the direction indicator lights;
– strong acceleration;
– emergency braking;
– ...

If the function is unavailable, the warning light and the left/right correction warning lights ***3*** appear in grey on the instrument panel.

Conditions for non-activation of the system

The system cannot be activated when:
– reverse gear is engaged;
– the field of vision of the camera is obstructed;
– the STOP warning light is displayed.

The warning light and the left/right line warning lights are displayed in grey on the instrument panel.

Adjustment

Vehicles fitted with a multimedia screen.

To access the multimedia screen function settings ***4***, refer to the multimedia instructions:

– “Vibration”: adjust steering wheel vibration for the “Lane Departure Warning” function;

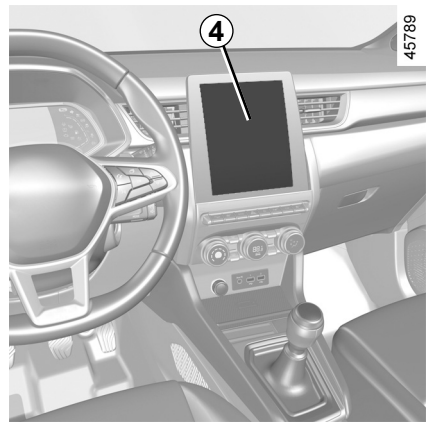

– “Alert”: adjust the line detection sensitivity level. To do this, select:
  – “Late”: line detected when crossing;
  – “Standard”: line detected on approach;
  – “Early”: line detected nearby.

Please refer to the multimedia instructions for further information.

LANE KEEPING ASSIST (5/6)

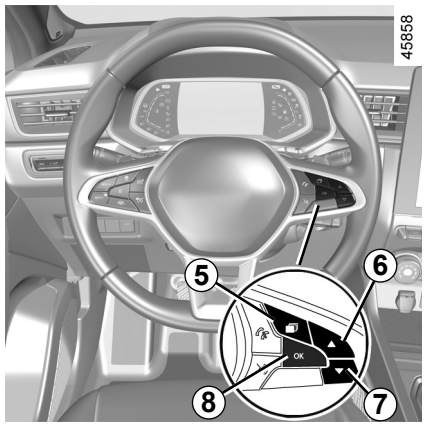

Adjustments (continued)

Vehicles not fitted with a multimedia screen

– With the vehicle stopped, press the switch ***5*** as many times as required to reach the “Vehicle” tab;

– press the ***6*** or ***7*** control repeatedly to reach the “Settings” menu. Press the switch ***8*** **OK**;

– press the ***6*** or ***7*** control repeatedly to reach the “DRIVING ASSIST” menu. Press the switch ***8*** **OK**;

– press the ***6*** or ***7*** control repeatedly to reach the “Lane Keeping sensitivity” menu. Press the switch ***8*** **OK**;

– scroll repeatedly pressing control ***6*** or ***7*** to adjust the setting. Press the ***8*** **OK** button.

Operating faults

When the system detects an operating fault, the warning light lights up on the instrument panel, with the message “Front camera to check”.

Consult an approved dealer.

LANE KEEPING ASSIST (6/6)

This function is an additional driving aid. This function is not under any circumstances intended to replace the due care and attention of the driver, who should at all times be in control of the vehicle.

System servicing/repairs

– In the event of an impact, the camera alignment may be changed, and its operation may consequently be affected. Deactivate the function and consult an authorised dealer.
– Any work in the area where the camera is located (repairs, replacements, windscreen modifications etc.) must be carried out by a qualified professional.

Only an authorised dealer is qualified to service the system.

In the event of system disturbance

Some conditions can disturb or damage the operation of the system, such as:
– windscreen obscured (by dirt, ice, snow, condensation etc.);
– a complex environment (tunnel etc.);
– poor weather conditions (snow, rain, hail, black ice etc.) ;
– poor visibility (night, fog etc.);
– the road markings are irregular or difficult to distinguish (e.g. partially erased, excessive spacing, distorted road surface) ;
– being dazzled (glaring sun, lights of vehicles travelling in the opposite direction etc.);
– the road is narrow, winding or undulating (tight bends etc.);
– closely following a vehicle travelling in the same lane.

In this case, the “Lane Keeping Assist” may react incorrectly or not at all.

Risk of unwanted, incorrect correction or no correction of trajectory.

Deactivating the function

You must disable the function if:
– the area of the camera has been damaged (on the windscreen side or the interior rear-view mirror side);
– the road is slippery (snow, black ice, aquaplaning, gravel etc.) ;
– poor visibility (night, fog etc.);
– the windscreen is cracked or distorted (do not carry out windscreen repairs in this area; have it changed by an Authorised Dealer);
– the vehicle is towing a trailer or a caravan;
– the vehicle is entering an area with several surface markings (an area with road works etc.).

BLIND SPOT WARNING (1/7)

58916

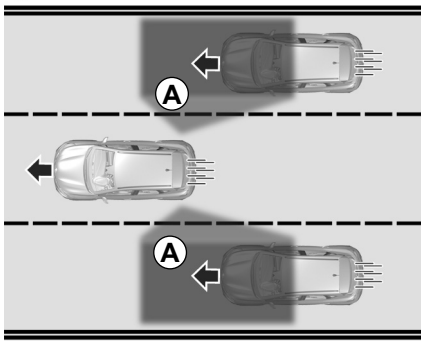

58917

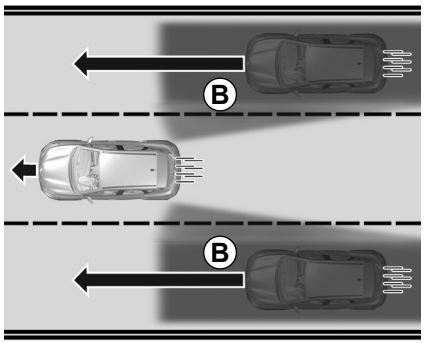

58920

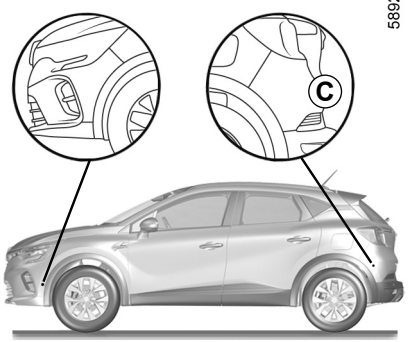

Using information from the sensors installed on each side of the rear bumper (area ***C***), the function warns the driver:

– when another vehicle appears in the detection area ***A***;

and/or

– when there is a risk of collision with a vehicle that is in area ***B***, driving faster than you.

The function warns you when the vehicle is travelling at a speed above approximately 9 mph (15 km/h).

This function is an additional driving aid. This function is not under any circumstances intended to replace the due care and attention of the driver, who should at all times be in control of the vehicle.

Special feature

Ensure that the area ***C*** around the radars on each side of the rear bumper are not obstructed (by dirt, mud, snow, condensation, etc.).

If a radar is obscured, the message “Side radars no visibility” will appear on the instrument panel. Clean the area where the sensors are located.

OVSE23E2

BLIND SPOT WARNING (2/7)

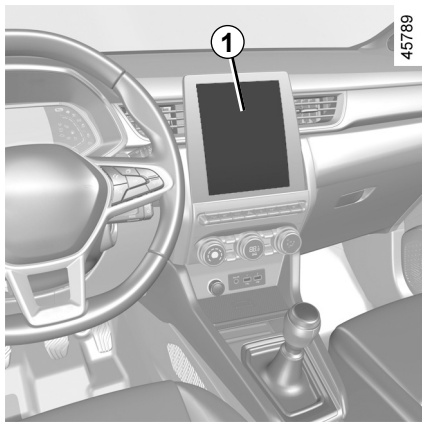

Activation/deactivation

Vehicles fitted with a multimedia screen *1*

To activate or deactivate the function, refer to the multimedia instructions.

Select “ON” or “OFF”.

Vehicles not fitted with a multimedia screen

– With the vehicle stopped, press the ***2*** switch as many times as required to reach the “Vehicle” tab;

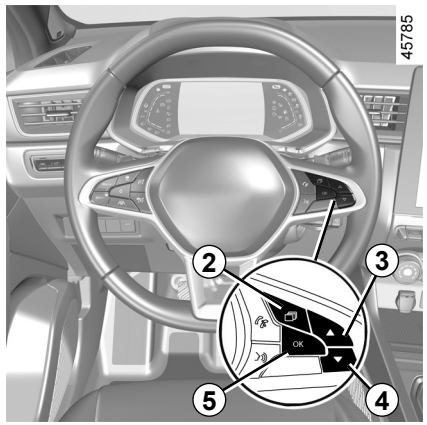

– press the ***3*** or ***4*** control repeatedly to reach the “Settings” menu. Press the switch ***5*** **OK**;

– press the ***3*** or ***4*** control repeatedly to reach the “DRIVING ASSIST” menu. Press the switch ***5*** **OK**;

– press the ***3*** or ***4*** control repeatedly to reach the “Blind spot alert” menu and press the ***5*** **OK** switch;

– press the switch ***5*** **OK** again to activate or deactivate the function:

☑ function activated

☐ function deactivated

The system’s detection range operates according to a standard lane width. When driving in a narrow lane, the function can warn you when a vehicle is detected beyond the adjacent lane.

OVSE23E2

BLIND SPOT WARNING (3/7)

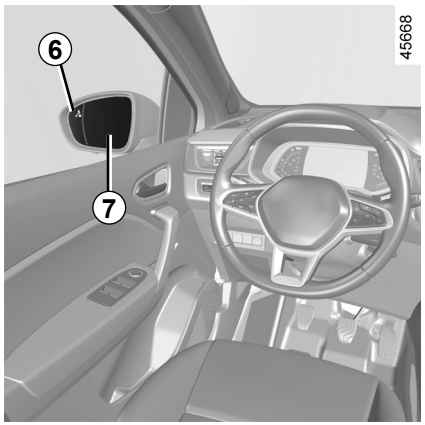

Indicator *6*

An indicator light ***6*** is located on each rear view mirror ***7***.

Note: clean the rear view mirrors ***7*** regularly so that the indicators ***6*** can be seen.

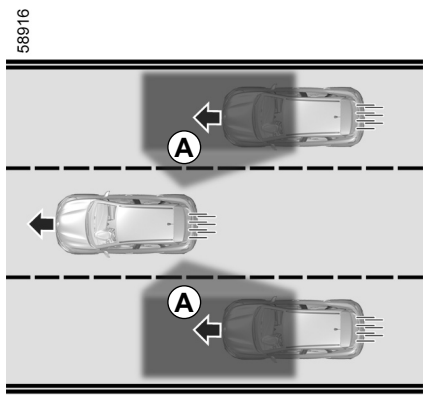

Operation

The function warns you when the speed of your vehicle is over 9 mph (15 km/h):
– when another vehicle is in the blind spot area ***A*** and travelling in the same direction as your vehicle;
– when a vehicle approaches quickly from the rear in an adjacent lane within the range of detection area ***B***.

If you overtake another vehicle, the ***6*** indicator will only come on if that vehicle remains for a long enough period in your vehicle's blind spot ***A***.

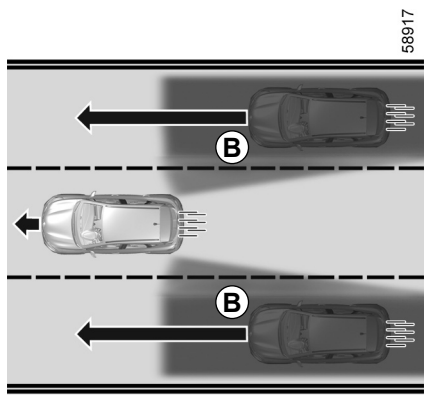

The function does not notify the driver if the other vehicles are not moving.

BLIND SPOT WARNING (4/7)

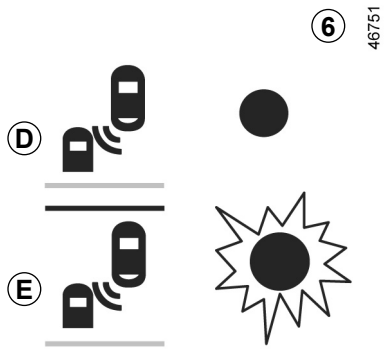

Display *D*

First warning: **direction indicator not activated**, the ***6*** warning light indicates that a vehicle is detected in the blind spot area and/or that a vehicle is rapidly approaching from the rear in an adjacent lane.

When the engine is started, the system adopts the last status saved before the ignition was switched off (refer to the previous pages).

Display *E*

Direction indicator activated, the ***6*** warning light flashes when the function detects a vehicle in the blind spot warning area and/or a vehicle is rapidly approaching from the rear on the side towards which you will turn the wheel. If you cancel the direction indicator, the function will return to the initial warning (display ***D***).

Conditions for non-function

– When driving on a road with tight bends;

– in reverse.

If the vehicle is equipped with a towbar recognised by the system, the “Trailer: blind spot alert off” message displayed on the instrument panel informs you that the function is not operational. For information on the range of equipment adapted to your vehicle, we advise you to consult an approved Dealer.

BLIND SPOT WARNING (5/7)

Operating faults

If the system detects a fault, the message “Side radars to check” is displayed on the instrument panel. Consult an approved dealer.

Due to the presence of sensors behind the bumper, it is advisable to entrust any operation on the bumper (repair, replacement, paintwork, etc.) to a qualified professional.

– The system’s detection range operates according to a standard lane width. If you are driving in wide traffic lanes, the system might not be able to detect a vehicle in the blind spot.

– The system might be disrupted momentarily if it is exposed to strong electromagnetic waves (as beneath high-tension power lines) or to very poor weather conditions (heavy rain, snow etc.). Remain aware of driving conditions.

There is a risk of accidents.

OVSE23E2

BLIND SPOT WARNING (6/7)

This function is an additional driving aid. This function is not under any circumstances intended to replace the due care and attention of the driver, who should at all times be in control of the vehicle.

The driver should always adapt their speed to the traffic conditions, regardless of the system indications.

The system should under no circumstances be taken to be an obstacle detector or an anti-collision system.

System servicing/repairs

– In the event of an impact, radar alignment may be changed, and its operation will consequently be affected. Deactivate the function and consult an authorised dealer.

– Any work in the area where the radars are located (repairs, replacements, etc.) must be carried out by a qualified professional.

Only an authorised dealer is qualified to service the system.

System disturbance

Some conditions can disturb or damage the operation of the system, such as:

– complex surroundings (metal bridges, tunnels, roads with barriers at the edge, etc.);

– poor weather conditions (snow, hail, black ice, etc.).

Risk of false alarms or absence of warnings

In the event of the system behaving abnormally, deactivate it and consult an authorised dealer.

BLIND SPOT WARNING (7/7)

Limitation of the system operation

– The radar area should be kept clean and free of any modifications in order to ensure the proper operation of the system.

– Small objects moving close to the vehicle (motorcycles, bicycles, pedestrians, etc.) may not be recognised by the system.

– When turning into a bend, the radars may temporarily cease to detect vehicles in adjacent lanes.

– The function may warn you late if two other vehicles are approaching from the rear, driving side by side in the adjacent lanes (i.e. driving on a 3-lane road) at a much higher speed than your vehicle.

– The system may not provide a warning when the other vehicles are travelling at a significantly different speed.

– If the vehicle is being overtaken by a long vehicle (e.g. heavy goods vehicle overtaking at a similar speed to the vehicle) the system may interrupt the warning before the end of the manoeuvre.

– The vehicle is travelling on a winding road.

Deactivating the function

You must disable the function if:

– the radar area has been damaged (rear bumper);

– the vehicle is fitted with a towbar that is not recognised by the system.

SAFE DISTANCE ALERT (1/4)

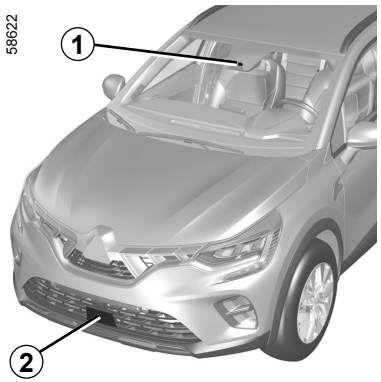

Using the information from the radar ***2*** and camera ***1***, this function informs the driver of the time interval between their vehicle and the vehicle in front so that a safe stopping distance between the two vehicles can be maintained.

The function is activated when the vehicle speed is between about 19 and 124 mph (30 and 200 km/h).

Location of the camera *1*

Make sure the windscreen is not obscured (by dirt, mud, snow, condensation etc.).

Location of the radar *2*

Ensure that the radar area is not obstructed (by dirt, mud, snow, a badly fitted front number plate), impacted, modified (including painting) or hidden by any accessory fitted on the front of the vehicle (on the grille or logo etc.).

This function is an additional driving aid. This function is not under any circumstances intended to replace the due care and attention of the driver, who should at all times be in control of the vehicle.

SAFE DISTANCE ALERT (2/4)

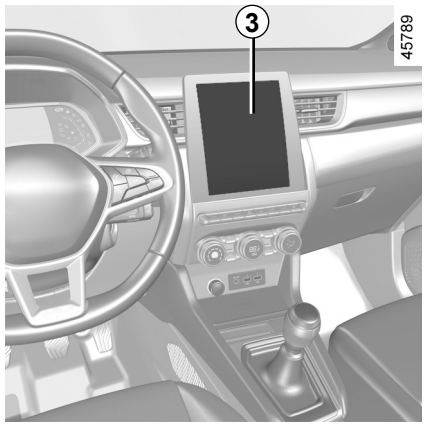

Activating/deactivating the function

Vehicles fitted with a multimedia screen *3*

To activate or deactivate the function, refer to the multimedia instructions.

Select “ON” or “OFF”.

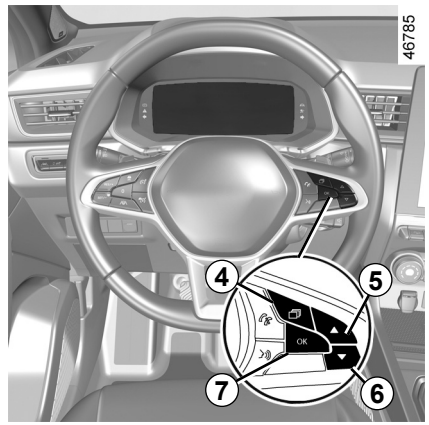

Vehicles not fitted with a multimedia screen

– With the vehicle stopped, press the switch ***4*** as many times as required to reach the “Vehicle” tab;

– press the ***5*** or ***6*** control repeatedly to reach the “Settings” menu. Press the switch ***7* OK**;

– press the ***5*** or ***6*** control repeatedly to reach the “DRIVING ASSIST” menu. Press the switch ***7* OK**;

– press the ***5*** or ***6*** control repeatedly to reach the “Distance warning” menu. Press the switch ***7* OK**;

– Press the switch ***7* OK** again to activate or deactivate the function:

☑ function activated

☐ function deactivated

Each time the vehicle is started, the function continues the mode saved the last time the engine was stopped.

SAFE DISTANCE ALERT (3/4)

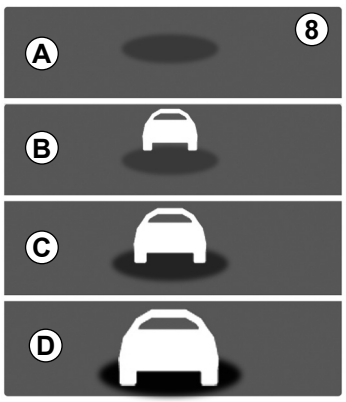

39301

Operation

With the function activated, the ***8*** indicator is displayed on the instrument panel and informs the driver of the distance between their vehicle and the vehicle in front.

– ***A*** (grey): function not operational;

– ***A*** (green): no vehicle detected;

– ***B*** (green): the time interval is greater than or equal to around two seconds (distance between the two vehicles adapted to your speed);

– ***C*** (orange): the time interval falls between around 1 and 2 seconds (insufficient distance between the two vehicles);

– ***D*** (red): the time interval is less than or equal to around one second (very insufficient distance between the two vehicles).

If the interval between the two vehicles is less than approximately 0.5 seconds, the ***8*** indicator and the ***D*** display will flash in red on the instrument panel along with “-.- s”.

Under certain conditions, the time interval may not be displayed:

– while cornering;

– when changing lane;

– if the vehicle in front is sufficiently far or outside the range of the radar or camera.

The measurement is displayed for information: the system does not carry out any action on the vehicle.

This function is not designed for use in urban conditions or for a dynamic driving style (sudden cornering, acceleration, braking, etc.), but rather for stable driving conditions.

The function does not interact with the braking system.

The radar and camera zones must be kept clean and free of any tampering in order to ensure the proper operation of the system.

Any work carried out in the area where the radar or camera is located (repairs, replacements, windscreen and/or bumper modifications, etc.) must be carried out by a qualified professional.

SAFE DISTANCE ALERT (4/4)

This function is an additional driving aid. This function is not under any circumstances intended to replace the due care and attention of the driver, who should at all times be in control of the vehicle.

System servicing/repairs

– In the event of an impact, the radar and/or camera alignment may be changed and its operation may consequently be affected. Deactivate the function and consult an authorised dealer.

– Any work carried out in the area where the radar and/or camera is located (replacements, repairs, windscreen and/or bumper modifications, etc.) must be carried out by a qualified professional.

Only an authorised dealer is qualified to service the system.

In the event of system disturbance

– obstruction of the windscreen or the bumper (by dirt, glass, snow, condensation, etc.);
– a complex environment (metal bridge, tunnel etc.);
– poor weather conditions (snow, hail, black ice etc.);
– poor visibility (night, fog etc.);
– poor contrast between the vehicle preceding it and the surrounding area (e.g. white vehicle in a snowy area etc.) ;
– being dazzled (glaring sun, lights of vehicles travelling in the opposite direction etc.);
– the road is narrow, winding and undulating (tight bends etc.)

Risk of erroneous false alarms.

ENG_NU_1506-2_HJB_Mitsubishi_2
ENG_UD78927_1
Alerte distance de sécurité (HJB MMC - Mitsubishi)

ACTIVE EMERGENCY BRAKING (1/8)

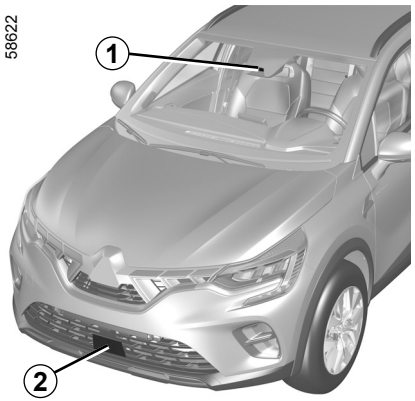

The system uses information from the radar ***2*** and the camera ***1*** to determine the distance from your vehicle:

– from the vehicle ahead in the same lane;

or

– surrounding pedestrians and cyclists.

The system informs the driver if there is a risk of head-on collision to enable appropriate emergency manoeuvres (pressing the brake pedal and/or turning the steering wheel).

Depending on the reactivity of the driver, the system can assist with braking in order to limit damage or prevent a collision.

Note: ensure that the windscreen and front bumper are not obstructed (by dirt, mud, snow, condensation, number plate, etc.).

Location of the camera *1*

Make sure the windscreen is not obscured (by dirt, mud, snow, condensation etc.).

Location of the radar *2*

Ensure that the radar area is not obstructed (by dirt, mud, snow, a badly fitted front number plate), impacted, modified (including painting) or hidden by any accessory fitted on the front of the vehicle (on the grille or logo etc.).

This system can apply maximum braking to the vehicle until it is completely stationary if necessary.

For safety reasons, always wear your seat belt when travelling in your vehicle and make sure that it is loaded so that no items can be thrown forward and hit the occupants.

This function is an additional driving aid. This function is not under any circumstances intended to replace the due care and attention of the driver, who should at all times be in control of the vehicle.

OVSE23E2

ACTIVE EMERGENCY BRAKING (2/8)

Operation

Detection of vehicles
When driving at a speed between approximately 4 mph (7 km/h) and 105 mph (170 km/h), if there is a risk of collision with the vehicle in front, the system:

– **warns you of a collision risk:**
When the vehicle speed is between approximately 4 mph (7 km/h) and 106 mph (170 km/h), the message “Brake” is displayed in red on the instrument panel ***3*** accompanied by a beep.

If the driver depresses the brake pedal and the system still detects a risk of collision, the brake force is increased.

– **may trigger braking:**
when the vehicle speed is below approximately 75 mph (120 km/h), if the driver does not respond to the warning and a collision is imminent.

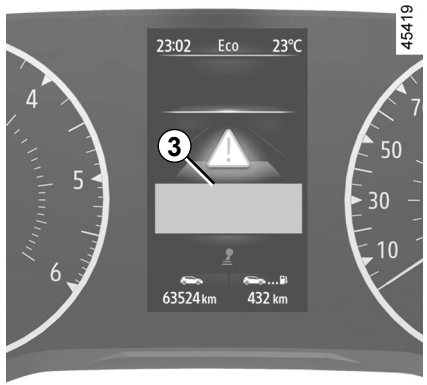

If active emergency braking has caused the vehicle to stop, the vehicle is kept stationary for a short time. Beyond this time limit, the vehicle must be held stationary by the driver keeping their foot on the brake pedal.

Note: if the driver uses the vehicle controls (steering wheel, pedals, etc.) the system may delay certain operations or not activate.

Special features of warnings

Depending on the speed, the warning and braking may be activated simultaneously.

Special features of stationary vehicles

Stationary vehicles are detected when your vehicle is being driven at a speed between approximately 4 mph (7 km/h) and 50 mph (80 km/h). The system is not active and does not emit a warning for stationary vehicles when you exceed approximately 50 mph (80 km/h).

In the event of emergency manoeuvre, you can stop braking at any moment by:
– tapping the accelerator pedal;
or
– turning the steering wheel as a collision avoidance manoeuvre.

ACTIVE EMERGENCY BRAKING (3/8)

Detection of pedestrians and cyclists
(depending on the vehicle)

When driving at a speed between approximately 4 mph (7 km/h) and 50 mph (80 km/h), if there is a risk of collision with a cyclist or a pedestrian, the system:

– **warns you of a risk of collision:** the red  warning light or, depending on the vehicle, ***3*** and the “Brake” message are displayed on the instrument panel accompanied by a beep.

If the driver presses the brake pedal and the system still detects a risk of collision, the braking force may be increased if it is not sufficient to prevent the collision.

– **may trigger braking:**
if the driver fails to react following the alert and collision becomes imminent.

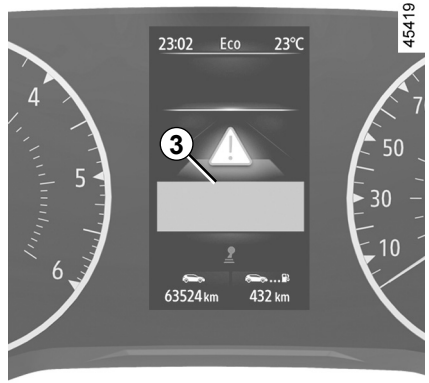

If active emergency braking has caused the vehicle to stop, the vehicle is kept stationary for a short time. Beyond this time limit, the vehicle must be held stationary by the driver keeping their foot on the brake pedal.

Note: if the driver uses the vehicle controls (steering wheel, pedals, etc.) the system may delay certain operations or not activate.

Special features of warnings

Depending on the speed, the warning and braking may be activated simultaneously.

In the event of emergency manoeuvre, you can stop braking at any moment by:
– tapping the accelerator pedal;
or
– turning the steering wheel as a collision avoidance manoeuvre.

OVSE23E2

ACTIVE EMERGENCY BRAKING (4/8)

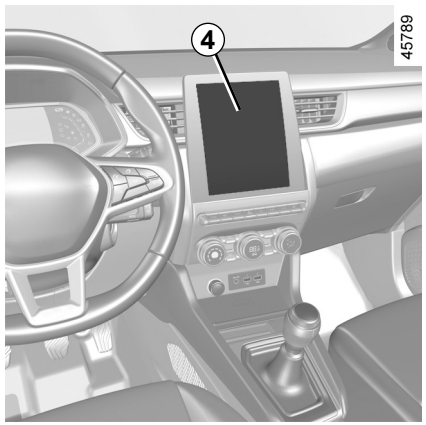

Activating or deactivating the system

For vehicles fitted with a multimedia screen *4*

To activate or deactivate the function, refer to the multimedia instructions.

Select “ON” or “OFF”.

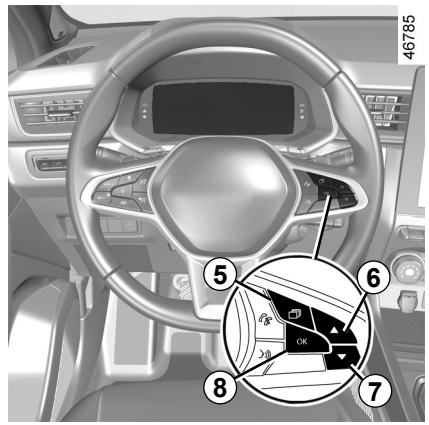

For vehicles not fitted with a multimedia screen

– With the vehicle stopped, press the switch ***5*** as many times as required to reach the “Vehicle” tab;
– press the ***6*** or ***7*** control repeatedly to reach the “Settings” menu. Press the switch ***8*** **OK**;
– press the ***6*** or ***7*** control repeatedly to reach the “DRIVING ASSIST” menu. Press the switch ***8*** **OK**;
– press the ***6*** or ***7*** control repeatedly to reach the “Active braking” menu and press the ***8*** **OK** switch.

Press the switch ***8*** **OK** again to activate or deactivate the function:

☑ function activated

☐ function deactivated

Upon deactivation of the system, the OFF warning light illuminates or, depending on the vehicle, the OFF warning light illuminates on the instrument panel.

This system is reactivated each time the ignition is switched on.

ACTIVE EMERGENCY BRAKING (5/8)

Temporarily not available

If the system detects a temporary fault the  warning light illuminates, or depending on the vehicle, the  warning light illuminates on the instrument panel.

The possible causes are:

– the system is temporarily blinded (glare from the sun, dipped beam headlights, bad weather conditions etc.). The system will be operational again when visibility conditions are better;

– the system is temporarily interrupted (e.g. the windscreen or the front or rear bumper is obscured by dirt, mud, snow, condensation, etc.). In this case, park the vehicle and switch off the engine. Clean the windscreen and front bumper. When you next start the engine, the warning light and the message go out.

If this is not the case, this may arise from another cause; contact an Approved Dealer.

Operating faults

 and  or, depending on the vehicle,  and  illuminates on the instrument panel: this indicates that the system has detected an operating fault. Consult an approved dealer.

ACTIVE EMERGENCY BRAKING (6/8)

Active emergency braking

This function is an additional driving aid. This function is not under any circumstances intended to replace the due care and attention of the driver, who should at all times be in control of the vehicle. The triggering of this function may be delayed or prevented when the system detects clear signs of control of the vehicle by the driver (action on the steering wheel, pedals etc.).

The system cannot be activated:
– when the gearbox lever is in neutral or the clutch pedal has been depressed during approximately ten seconds;
– when the parking brake is activated;
– when the Electronic Stability Program (ESC) has started.

System servicing/repairs

– In the event of an impact, the radar and/or camera alignment may be changed and its operation may consequently be affected. Deactivate the function and consult an authorised dealer.
– Any work in the area where the radar and/or camera is located (repairs, replacements, windscreen modifications, etc.) must be carried out by a qualified professional.

Only an authorised dealer is qualified to service the system.

ACTIVE EMERGENCY BRAKING (7/8)

System disturbance

Some conditions can disturb or damage the operation of the system, such as:

– a complex environment (metal bridge, tunnel etc.);
– poor weather conditions (snow, hail, black ice etc.);
– poor visibility (night, fog etc.);
– poor contrast between the object (vehicle, pedestrian etc.) and the surrounding area (e.g. pedestrian dressed in white located in a snowy area etc.) ;
– being dazzled (glaring sun, lights of vehicles travelling in the opposite direction etc.);
– windscreen obscured (by dirt, ice, snow, condensation etc.);
– ...

In these conditions, the system may not react, may warn the driver or may brake inadvertently.

Limitation of the system operation

– Each time the vehicle is started, the system carries out a calibration according to the vehicle surroundings and may be inactive for a length of time between approximately two and five minutes;
– A vehicle travelling in the opposite direction will not trigger any alert or affect operation of the system;
– The radar and camera zones must be kept clean and free of any tampering in order to ensure the proper operation of the system;
– the system may not respond to small vehicles such as motorbikes as effectively as to other vehicles;
– the system may not operate properly when the road surface is slippery (rain, snow, black ice, etc.);
– to ensure correct operation, the system needs to distinguish the complete outline of the pedestrian. So the system cannot detect:
  – pedestrians in the darkness or in poor lighting conditions;
  – partially visible pedestrians:
  – pedestrians less than approximately 80 cm tall;
  – pedestrians carrying large objects;
  – ...

In these conditions, the system may not react, may warn the driver or may brake inadvertently.

ACTIVE EMERGENCY BRAKING (8/8)

Deactivating the function

You must disable the function if:

– the brake lights are not functioning;

– the area of the camera has been damaged (e.g. on the inside or outside of the windscreen);

– the front of the vehicle was damaged (impact, scratch on the radar, etc.);

– the vehicle is being towed (breakdowns);

– the windscreen is cracked or distorted (do not carry out windscreen repairs in this area; have it changed by an approved dealer);

– you are not driving on a paved road.

In the event of the system behaving abnormally, deactivate it and consult an authorised dealer.

Halting the function

You can halt the active braking function at any time by tapping the accelerator pedal or by turning the steering wheel in a collision avoidance manoeuvre.

DETECTION OF ROAD SIGNS (1/4)

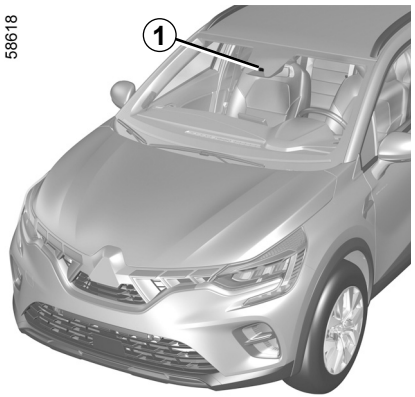

The system detects speed limit signs on the side of the road and displays the speed limit on the instrument panel.

It mainly uses information taken from the camera ***1***, attached to the windscreen behind the rear view mirror.

Note: make sure the windscreen is not obscured (dirt, mud, snow, condensation etc.).

For vehicles which are equipped with it, the system also uses information from the navigation system.

Once the speed limiter is activated, you can adjust the speed limiter indication displayed by the system.

If the limit speed is exceeded, the display panel is modified to warn the driver.

For vehicles equipped with a navigation system and if the vehicle is travelling in a country where the speed units differ from those of the vehicle, the system displays the speed limit sign in the unit of the country, alongside the speed limit converted to the unit used by the vehicle's instrument panel.

For countries where the speed limit is reduced during rainy weather on some types of roads, on vehicles equipped with a navigation system, the system can modify the limited speed after a few seconds of wiping the windscreen.

Special situations

The system does not take into account exceptional speed limit measures, such as peak pollution days.

DETECTION OF ROAD SIGNS (2/4)

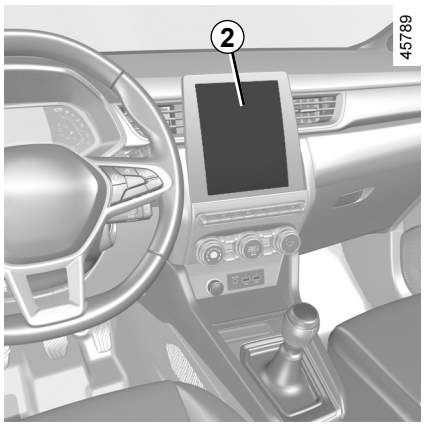

Activating/deactivating the system

Vehicles fitted with a multimedia screen *2*

To activate or deactivate the function, refer to the multimedia instructions.

Select “ON” or “OFF”.

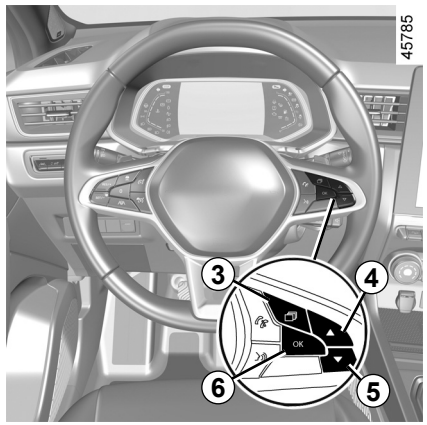

With the function activated, depending on local regulations, you can activate the “Risk area display” option. The system will notify you of the distance separating you from this zone, and while you are travelling in the zone.

Vehicles not fitted with a multimedia screen

– With the vehicle stopped, press the switch ***3*** as many times as required to reach the “Vehicle” tab;
– press the ***4*** or ***5*** control repeatedly to reach the “Settings” menu. Press the switch ***6*** **OK**;
– press the ***4*** or ***5*** control repeatedly to reach the “DRIVING ASSIST” menu. Press the switch ***6*** **OK**;
– press the ***4*** or ***5*** control repeatedly to reach the “Speed alert” menu and press the ***6*** **OK** switch;
– press the ***6*** **OK** switch to activate or deactivate the function:

☑ function activated

☐ function deactivated

DETECTION OF ROAD SIGNS (3/4)

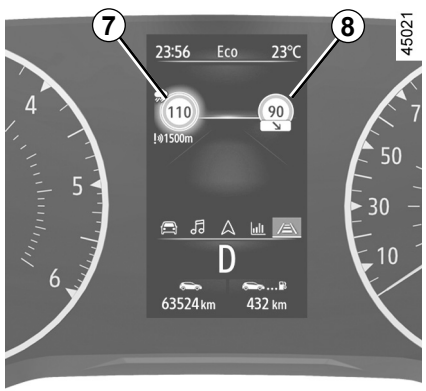

Operation

Warning lights

The function displays the following warning lights:

7 Speed limit road signs

8 Additional road signs (start or end of “No overtaking” zone, slip road speed limit, speed in case of a caravan, speed limit with length of application, etc.)

If the speed limit is exceeded, the circle around the panel flashes (***7*** warning light) along with a sound signal to warn the driver.

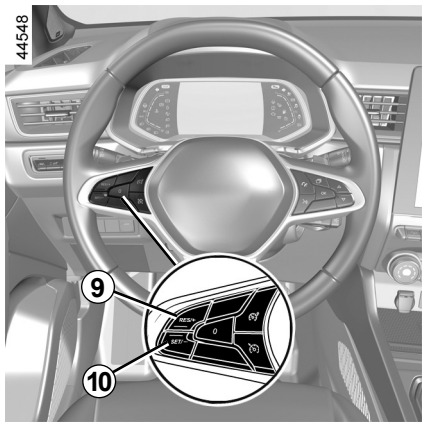

Varying the limit speed

If the speed limit notification differs from the detected speed value, press and hold the following switches:

– ***9*** (RES/+) to increase the notification speed to the detected speed;
– ***10*** (SET/-) to reduce the notification speed to the detected speed.

DETECTION OF ROAD SIGNS (4/4)

Operating faults

The system cannot detect the speed limit if:

– the windscreen is not clean;

– the camera is blinded by the sun;

– there is insufficient visibility (night, fog etc.) ;

– the signs are not legible (snow, etc.) or are hidden (by another vehicle or by trees);

– the information taken from the navigation system is not up to date.

This function is an additional driving aid. This function is not under any circumstances intended to replace the due care and attention of the driver, who should at all times be in control of the vehicle.

The driver should always adapt their speed to the traffic conditions, regardless of the system indications.

The system detects maximum speed limit signs and does not detect other signs (e.g. entry/exit to/from urban areas).

The system may not detect all speed limit signs or may interpret them incorrectly.

The driver should not ignore signs that are not detected by the system and should, as a priority, comply with the traffic signage and the highway code.

In the event of poor visibility (fog, snow, frost, etc.), it is possible that the system may not indicate the correct speed to the driver.

The driver should always adapt their speed to the traffic conditions, regardless of the system indications.

SPEED LIMITER (1/4)

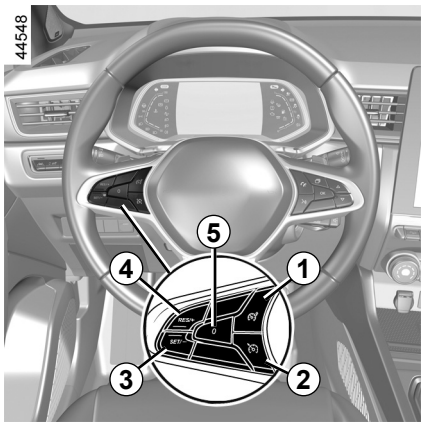

The speed limiter function helps you stay within the driving speed limit that you choose, known as the **limit speed**.

Controls

1 Speed limiter On/Off switch.

2 Cruise control On/Off switch.

3 Switch to activate and decrease the limit speed (SET/-).

4 Switch to activate and increase the limit speed or to set the stored limit speed (RES/+).

5 Speed limiter function standby (with limited speed memory) (0).

You can link the speed limiter to the “Road sign detection” function. ➥ 2.73.

OVSE23E2

SPEED LIMITER (2/4)

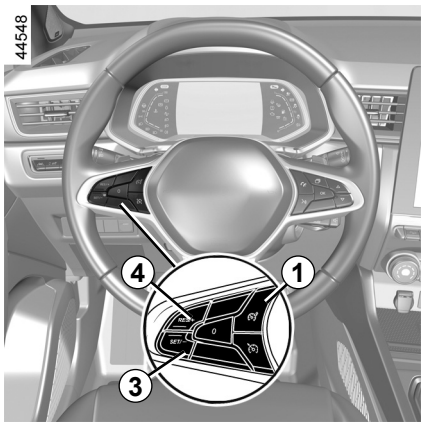

Driving

When a limit speed has been set but not yet reached, driving is similar to driving a vehicle without the speed limiter function.

Once you have reached the stored speed, no effort on the accelerator pedal will allow you to exceed the programmed speed except in an emergency (refer to information on “Exceeding the limit speed”).

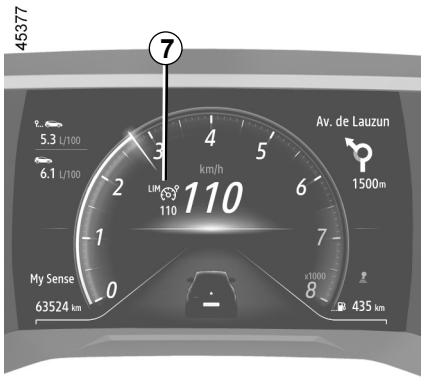

Switching on

Press switch ***1***. The ***7*** warning light appears in grey. The “Speed limiter ON” message appears on the instrument panel accompanied by dashes to indicate that the speed limiter function is in operation, waiting to store a limit speed.



To store the current speed, press the ***4*** switch (RES/+) or the ***3*** switch (SET/-): the limit speed replaces the dashes and, depending on the vehicle, the ***7*** warning light appears in white.
The minimum stored speed is 19 mph (30 km/h).

SPEED LIMITER (3/4)

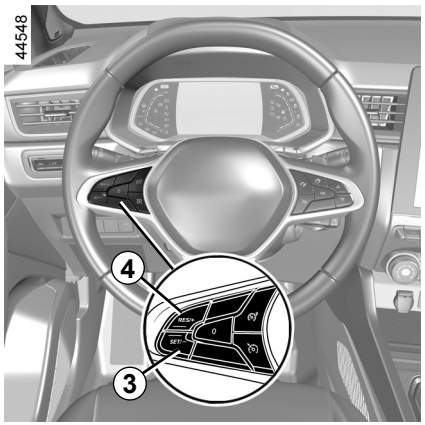

Varying the limit speed

The limit speed may be changed by pressing repeatedly or holding down:
– switch ***4*** (RES/+) to increase speed;
– switch ***3*** (SET/-) to reduce speed.

Exceeding the limit speed

It is possible to exceed the limit speed at any time. To do this: press the accelerator pedal **firmly and fully** (beyond the resistance point).
While the speed is being exceeded, the speed limiter flashes red on the instrument panel. Then, release the accelerator pedal: the speed limiter function will return as soon as you reach a speed lower than the memorised speed.

If the speed limiter is not available (after several attempts to activate), contact an approved dealer.

Limited speed cannot be maintained

When driving down a steep gradient, the system may not maintain the limit speed: the limit speed flashes in red on the instrument panel and an audible signal sounds at regular intervals to inform you of this situation.

OVSE23E2

SPEED LIMITER (4/4)

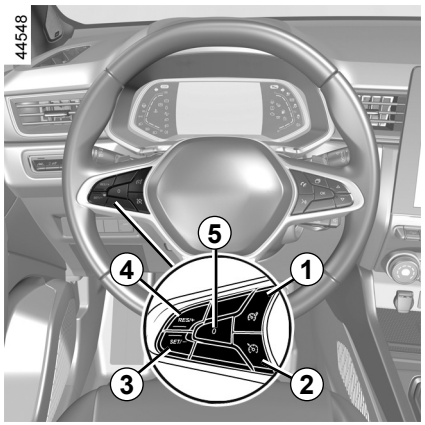

Putting the function on standby

The speed limiter function is suspended when you press switch ***5*** (0). The limit speed is stored and displayed in grey on the instrument panel.

Recalling the limit speed

If a speed has been stored, it can be recalled by pressing the ***4*** switch.

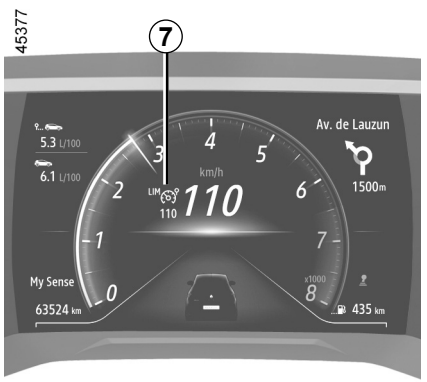

When the speed limiter is set to standby, pressing the ***3*** switch re-activates the function without taking into account the memorised speed: the speed at which the vehicle is moving is taken into account.



Switching off the function

The speed limiter function is interrupted:

– when you press the ***1*** switch. In this case, the speed is no longer stored;

– when you press the ***2*** switch. In this case the cruise control is selected and there is no stored speed.

The warning light ***7*** disappears from the instrument panel to confirm that the function is no longer active.

OVSE23E2

CRUISE CONTROL (1/5)

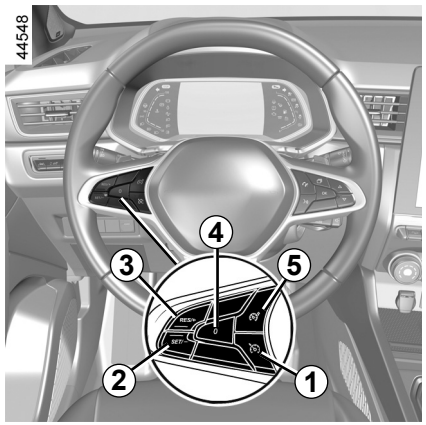

The cruise control function helps you to maintain your driving speed at a speed that you choose, called the **cruising speed.**

This cruising speed may be set at any speed above 19 mph (30 km/h).

Controls

1 Cruise control On/Off switch.

2 Switch to activate and decrease cruising speed (SET/-).

3 Switch to activate and increase cruising speed or to recall the memorised cruising speed (RES/+).

4 Switch the function to standby (with cruising speed saved) (0).

5 Speed limiter On/Off switch.

This function is an additional driving aid.

It can under no circumstances replace the driver's responsibility to respect speed limits or to be vigilant.

The driver must always be in control of the vehicle.

Cruise control must not be used in heavy traffic, on winding or slippery roads (black ice, aquaplaning, gravel) and during bad weather (fog, rain, side winds etc.).

There is a risk of accidents.

OVSE23E2

CRUISE CONTROL (2/5)

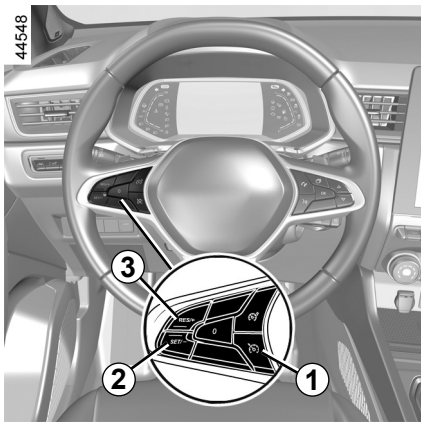

Switching on

Press switch ***1***.

The ***7*** warning light appears in grey.

The “Cruise control ON” message appears on the instrument panel accompanied by dashes to indicate that the cruise control function is in operation and waiting to memorise a cruising speed.

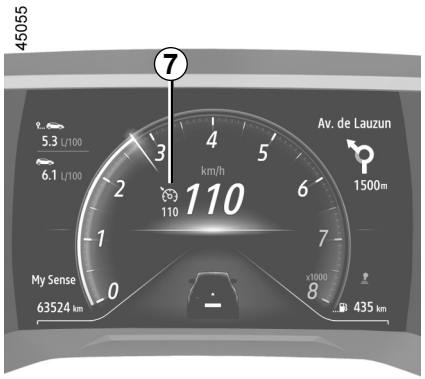

Activating cruise control

While the vehicle is moving a steady speed above approximately 19 mph (30 km/h), press the ***2*** (SET/-) switch or the ***3*** (RES/+) switch: the function is activated and the current speed is taken into account.
The cruising speed replaces the dashes. Cruise control is confirmed when the memorised speed and warning light appear in green ***7***.

If you try to activate the function below 19 mph (30 km/h), the message “Invalid Speed” will be displayed and the function will remain inactive.

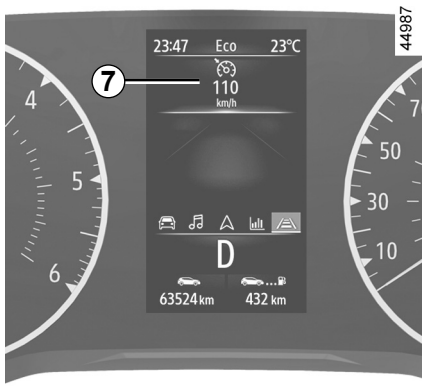

Driving

Once a cruising speed is registered and the cruise control function is active, you may lift your foot off the accelerator pedal.

Please note that you must keep your feet close to the pedals in order to react in an emergency.

CRUISE CONTROL (3/5)

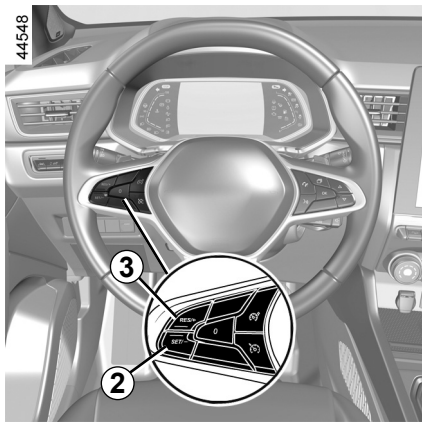

Adjusting the cruising speed

The cruising speed may be changed by pressing the following repeatedly:

– the ***2*** switch (SET/-) to reduce the speed;
– the ***3*** switch (RES/+) to increase the speed.

Note: press and hold one of the switches to modify speed by successive increments.

Exceeding the cruising speed

The cruising speed may be exceeded at any time by depressing the accelerator pedal.

While it is being exceeded, the cruising speed flashes in red on the instrument panel. Then, release the accelerator pedal: after a few seconds, the vehicle will automatically return to its set cruising speed.

Cruising speed cannot be maintained

When driving down a steep gradient, the system may be unable to maintain the cruising speed: the memorised speed will flash in red on the instrument panel and an audible signal sounds at regular intervals to inform you of this situation.

If the cruise control is no longer available (after several attempts to activate it), contact an Approved Dealer.

OVSE23E2

CRUISE CONTROL (4/5)

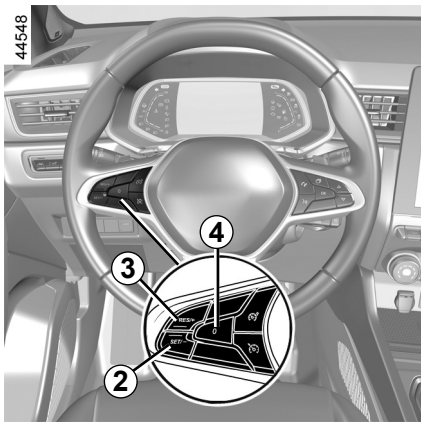

Putting the function on standby

The function is set to standby if you:

– ***4*** switch (0);

– the brake pedal;

– the clutch pedal or shifting to neutral if the vehicle has an automatic gearbox;

– depending on the vehicle, the clutch pedal for a prolonged period or upon prolonged neutral position.

The cruising speed is stored and displayed in grey on the instrument panel.

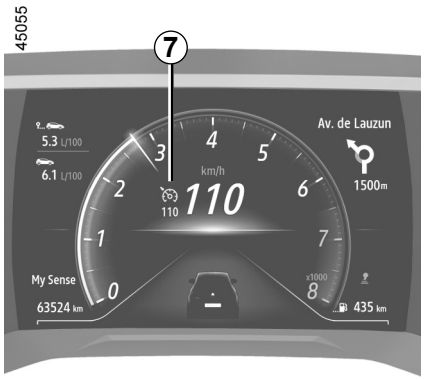

Returning to the cruising speed

If a speed is stored, it can be recalled, once you are sure that the road conditions are suitable (traffic, road surface, weather conditions, etc.). Press the switch ***3*** (RES/+) if the vehicle speed is above 19 mph (30 km/h).

When the speed is stored, cruise control activation is confirmed by the display in green of the cruising speed and, depending on the vehicle, the ***7*** warning light is displayed.



NB: if the speed previously stored is much higher than the current speed, the vehicle will accelerate more rapidly to reach this threshold.

When the cruise control is set to standby, pressing switch ***2*** (SET/-) reactivates the cruise control function without taking into account the stored speed: it is the speed at which the vehicle is moving that is taken into account.

CRUISE CONTROL (5/5)

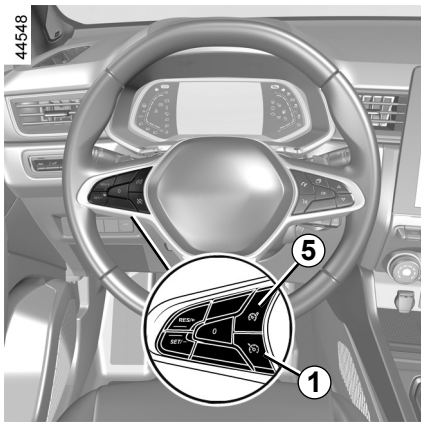

Switching off the function

The cruise control function is interrupted:

– when you press the ***1*** switch. In this case, the speed is no longer stored;

– when you press the ***5*** switch. In this case the speed limiter is selected and there is no stored speed.

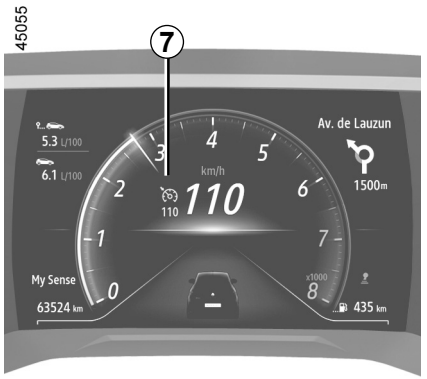

The warning light ***7*** disappears from the instrument panel to confirm that the function is no longer active.



Putting the cruise control on standby or switching it off does not cause a rapid reduction in speed: you must brake by depressing the brake pedal.

ADAPTIVE CRUISE CONTROL (1/14)

Based on information from a radar or camera, the adaptive cruise control function (or Stop and Go adaptive cruise control function on vehicles equipped with an automatic gearbox) enables you to maintain the speed selected (known as cruising speed) while keeping a following distance with the vehicle in front in the same lane.

On vehicles fitted with an automatic gearbox, if the vehicle in front stops, the Stop and Go adaptive cruise control function may apply the vehicle brakes to a full-stop before allowing the vehicle to move-on.

The system controls acceleration and deceleration of your vehicle using the engine and braking system.

The system's maximum range is approximately 150 metres. This may vary according to the road conditions (ground relief, weather conditions, etc.).

According to conditions on the road (traffic, weather etc.), the "Adaptive cruise control" function can be activated:

– 0 mph (0 km/h) to 105 mph (170 km/h) for vehicles fitted with an automatic gearbox;

– 19 mph (30 km/h) to 105 mph (170 km/h) for vehicles fitted with a manual gearbox.

The function is indicated by the  symbol.

Note:

– the driver must observe the maximum speed limit and safe distances in the country where they are driving;

– the adaptive cruise control can brake the vehicle up to a third of the braking capacity. Depending on the situation, the driver may need to brake harder.

The adaptive cruise control does not trigger an emergency stop and its braking capability is limited.



This function is an additional driving aid.

It can under no circumstances replace the driver's responsibility to respect speed limits and safe distances or to be vigilant.

The driver must always be in control of the vehicle. The driver must always adapt their speed according to the surroundings and traffic conditions. The adaptive cruise control must only be used on a motorway (or multi-lane road separated by a barrier). The cruise control must not be used in heavy traffic, on winding or slippery roads (black ice, aquaplaning, gravel) or during bad weather (fog, rain, side winds etc.).

There is a risk of accidents.

OVSE23E2

ADAPTIVE CRUISE CONTROL (2/14)

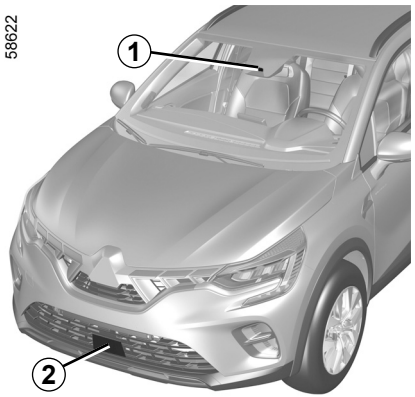

Location of the camera *1*

Make sure the windscreen is not obscured (by dirt, mud, snow, condensation etc.).

Location of the radar *2*

Ensure that the radar area is not obstructed (dirt, mud, snow, a badly fitted/attached front number plate), impacted, modified (including paintwork) or hidden by any accessory fitted on the front of the vehicle (on the grille or logo etc.).

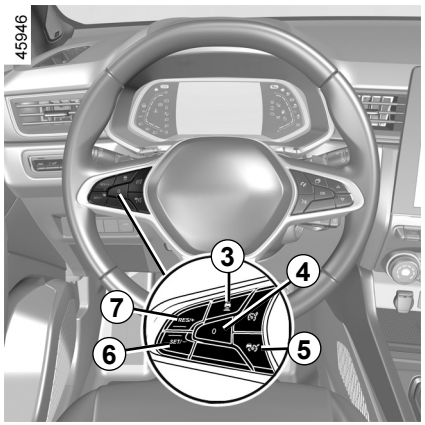

Controls

3 Safe distance settings

4 Switch the function to standby (with cruising speed saved) (0).

5 Adaptive cruise control main stop/start switch .

6 Cruising speed activation, storage and decrease switch (SET/-).

7 Switch to activate and increase cruising speed or to recall the memorised cruising speed (RES/+).



The radar and camera zones must be kept clean and free of any tampering in order to ensure the proper operation of the system.

ADAPTIVE CRUISE CONTROL (3/14)

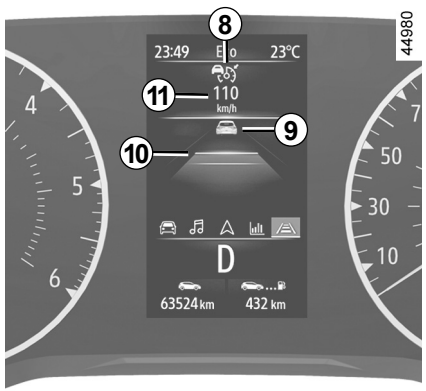

Displays

8 Adaptive cruise control warning light.

9 Vehicle in front.

10 Stored safe distance

11 Stored cruising speed.

Important: you should keep your feet near the pedals at all times to prepare for any event.

Switching on

Press switch ***5***.

Warning light appears in grey, and the message “Adaptive Cruise Ctl ON” appears on the instrument panel, accompanied by dashes to indicate that the cruise control function is activated and waiting to store a cruising speed.

The function cannot be used while the parking brake is applied.

The message “Adaptive Cruise Ctl unavailable” is displayed on the instrument panel.

Activating cruise control

When the vehicle is stationary (vehicles equipped with an automatic gearbox) or when the vehicle is moving at a steady speed (all vehicles), press the ***6*** (SET/-) or ***7*** (RES/+) switch to activate the function and store the current speed. The minimum cruising speed is 19 mph (30 km/h).

The cruising speed ***11*** replaces the dashes and cruise control is confirmed by the appearance of the cruising speed in green and warning light .

If you try to activate the function when the vehicle speed is over 105 mph (170 km/h) or below 19 mph (30 km/h) for vehicles fitted with a manual gearbox, the message “Invalid Speed” is displayed and the function is not activated.

Once a cruising speed is memorised and the cruise control function is active, you may lift your foot off the accelerator pedal.

Special feature on vehicles with an automatic gearbox: if the vehicle speed is below approximately 19 mph (30 km/h), the cruising speed will automatically be set to 19 mph (30 km/h). The vehicle will accelerate until it reaches the stored cruising speed.

ADAPTIVE CRUISE CONTROL (4/14)

Safe distance control activation

As soon as cruise control is activated, the default safe distance ***10*** is displayed in green on the instrument panel. The default safe distance corresponds to approximately two seconds (see following pages).

If the system detects a vehicle in your lane, an outline of a vehicle ***9*** appears above the distance gauge ***10*** on the instrument panel.

Your vehicle adapts its speed to that of the vehicle in front and applies the brakes if necessary (the brake lights come on) in order to maintain the distance displayed on the instrument panel.

Note: the size of the ***9*** outline varies according to the distance separating you from the vehicle in front. The larger the outline, the closer the vehicle in front.

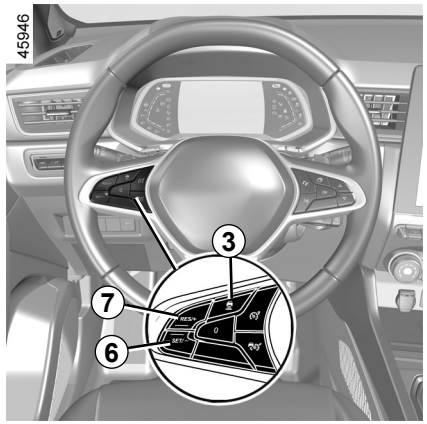

Setting the cruising speed

You can vary the speed by repeatedly pressing (for low variation) or pressing and holding (for high variation) switch ***6*** or ***7***:

– use the “SET/-” switch ***6*** to reduce the speed;

– use the “RES/+” switch ***7*** to increase the speed.

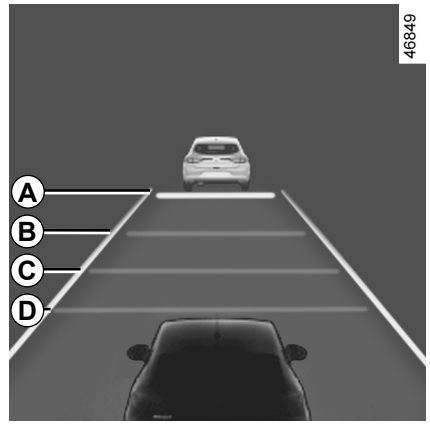

Adjusting the following distance

You can vary the safe distance from the vehicle in front at any time by pressing switch ***3*** repeatedly.

The horizontal distance gauge on the instrument panel indicates the various available safe distances:

– distance gauge ***A***: long distance (corresponding to approximately 2.4 seconds);

ADAPTIVE CRUISE CONTROL (5/14)

Adjusting the safe distance (cont.)

– distance gauge ***B***: intermediate distance 2 (corresponding to approximately 2 seconds);

– distance gauge ***C***: intermediate distance 1 (corresponding to approximately 1.6 seconds);

– distance gauge ***D***: short distance (corresponding to approximately 1.2 seconds).

The selected distance gauge appears in green on the instrument panel. The other gauges remain in grey.

Note: the distance must be set according to the traffic level, local regulation and weather conditions.

The safe distance is adjusted by default on the distance gauge ***B***.

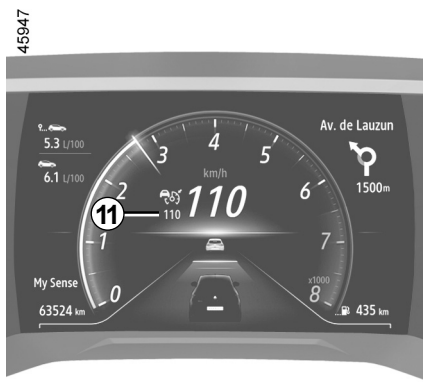

Exceeding the cruising speed

The cruising speed may be exceeded at any time by applying the accelerator pedal.

If it is exceeded, the cruising speed ***11*** appears in red.

The distance gauge flashes if the distance between your vehicle and the vehicle in front is less than the safe distance selected: the Safe Distance Control function is no longer active.

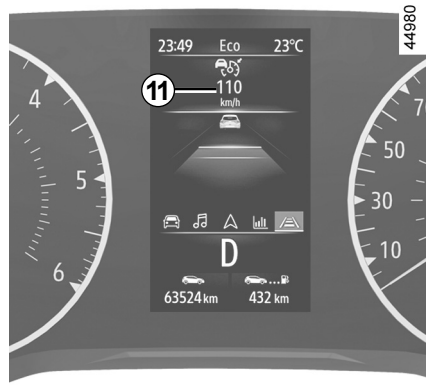

Then, release the accelerator pedal: the cruise control and safe distance control will automatically resume the speed and distance instructions that you had previously selected.

Overtaking manoeuvre

If you wish to overtake the vehicle in front, activating the indicator will temporarily cancel the safe distance control and enable an acceleration speed sufficient to complete overtaking.

ADAPTIVE CRUISE CONTROL (6/14)

Stop and start

On vehicles fitted with an automatic gearbox, if the vehicle in front slows down, the system adapts its speed to a complete stop if necessary (in the event of a traffic jam, etc.). The vehicle stops a few metres from the vehicle in front. The Stop and Start function can put the engine on standby ➥ 2.10.

When the vehicle in front sets off again:

– if the stop does not exceed about three seconds, the vehicle sets off automatically without any action by the driver;
– if the stop exceeds about three seconds, you must apply the accelerator pedal or press button **7** (RES/+) in order for the vehicle to set off again. The message “Press RES/+ or accelerate” appears on the instrument panel to confirm.

If the stop exceeds around three minutes, the electronic parking brake is automatically applied and the Stop and Go adaptive cruise control is deactivated. The  warning light disappears to confirm that the function is deactivated.

Putting the function on standby

You can set the function to standby when:

– you press switch ***4*** (0);
– you apply the brake pedal while the vehicle is moving.

The function is deactivated by the system if:

– you set the automatic gearbox to **P** or **N**;
– you engage the reverse gear;
– you unbuckle the driver’s seatbelt;
– you open one of the opening elements;
– you press the engine start/stop button;
– the slope is too steep;
– the vehicle speed is above 112 mph (180 km/h);
– certain driving aids and correction devices are triggered (active emergency braking, ABS, ESC);

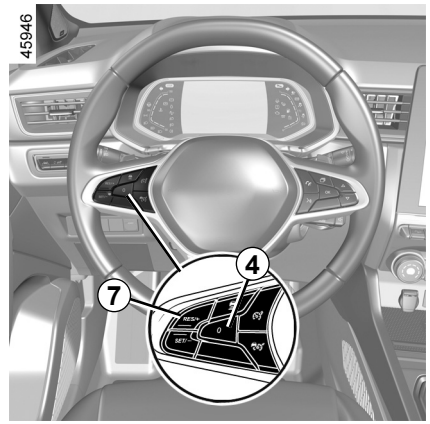

– when you press the clutch pedal for a prolonged period or upon prolonged neutral position on vehicles equipped with a manual gearbox.

In all circumstances, the standby is confirmed when the warning lights appear in grey and the message “Adaptive Cruise Ctl Disconnected” appears on the instrument panel.

Putting the adaptive cruise control in standby or switching it off does not cause a rapid reduction in speed: you must brake by applying the brake pedal if necessary.

OVSE23E2

ADAPTIVE CRUISE CONTROL (7/14)

Exit from standby

Based on the stored cruising speed

If a speed is stored, it can be recalled, once you are sure that the road conditions are suitable (traffic, road surface, weather conditions, etc.).

Press switch ***7*** (RES/+) in the range of confirmed speeds.

When the stored speed is recalled, activation of the cruise control is confirmed by the illumination of the cruising speed in green.

Note: if the stored speed is higher than the current speed, the vehicle will accelerate to reach that speed.

Based on the current speed

When the cruise control is set to standby, pressing switch ***6*** (SET/-) reactivates the cruise control function without taking into account the stored speed: it is the speed at which the vehicle is moving that is taken into account.

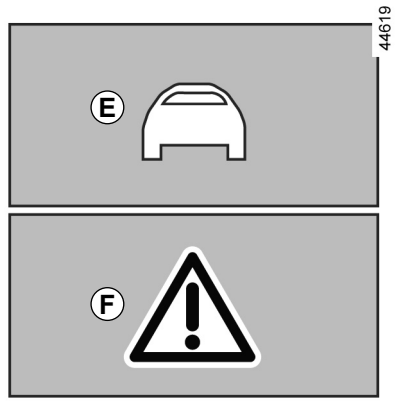

"Take control of the vehicle" warnings

In some situations (e.g. coming upon a much slower vehicle, vehicle in front changing lanes quickly etc.), **the system may not have time to react.**

Depending on the situation, the system sounds a beep associated with:

– the orange alert ***E*** if the situation requires the driver's attention;

or

– the red alert ***F*** accompanied by the message "Brake", if the situation requires the driver's immediate attention.

In all situations, react accordingly and perform the appropriate manoeuvres.

ADAPTIVE CRUISE CONTROL (8/14)

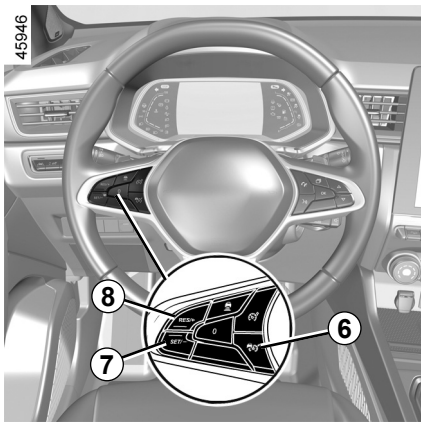

Switching off the function

The “Adaptive cruise control” function is deactivated when you press the switch ***6***.

The warning light disappears from the instrument panel to confirm that the function is no longer active.

Temporary unavailability

The radar is able to detect vehicles in front of your vehicle. The system cannot operate correctly if the radar detection area is obscured or if its signal is disrupted.

If the radar detection area is obstructed or the radar signal is disrupted, the message “Front radar no visibility” is displayed on the instrument panel and the “Adaptive cruise control” function is interrupted. The green warning light disappears to confirm that the function has been automatically deactivated.

Ensure that the radar area is not obstructed (dirt, mud, snow, a badly fitted/attached front number plate), impacted, modified (including paintwork) or hidden by any accessory fitted on the front of the vehicle (on the grille or logo etc.).

Conditions in certain geographical areas may hinder the function, for example:

– arid zones, tunnels, long bridges or lightly used roads without road lines, without signs or trees nearby;
– a military or airport zone.

You must leave such areas in order for the function to work.

In all cases, if the message is not erased after the engine is restarted, please contact an authorised dealer.

Operating faults

If an “Adaptive cruise control” function operating fault is detected, the message “Check Adaptive Cruise control” appears on the instrument panel and the “Adaptive cruise control” function is deactivated.

If an operating fault is detected on one or more components of the system, the “Adaptive cruise control” function is interrupted.

The warning light appears on the instrument panel along with, depending on the malfunction, one of the following messages:

– “Front camera to check”;
– “Front radar to check”;
– “Camera/Radar to check”;
– “Check vehicle”.

Consult an approved dealer.

ADAPTIVE CRUISE CONTROL (9/14)

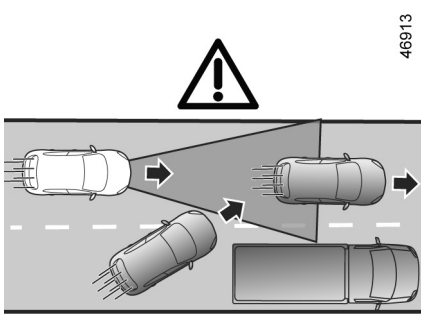

Ⓖ

Limitations of system operation

Vehicle detection

The system detects only vehicles (cars, trucks, motorbikes) that are moving in the same direction as your vehicle.

A vehicle turning into the same lane (e.g. ***G***) will be taken into account by the system only once it enters the camera and radar detection areas.

The system may trigger abrupt or delayed braking.

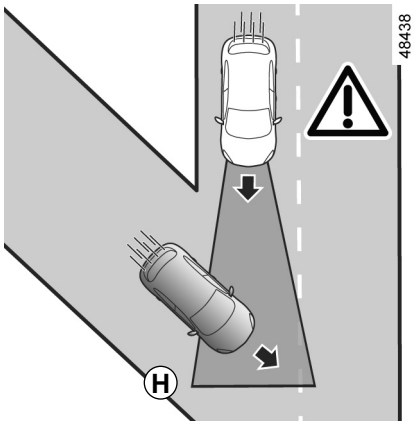

The system cannot detect:

– vehicles arriving at intersections: slip road (e.g. ***H***) etc;

– vehicles driving on the wrong side of the road or reversing towards you.

The adaptive cruise control must only be used on a motorway (or multi-lane road separated by a barrier).

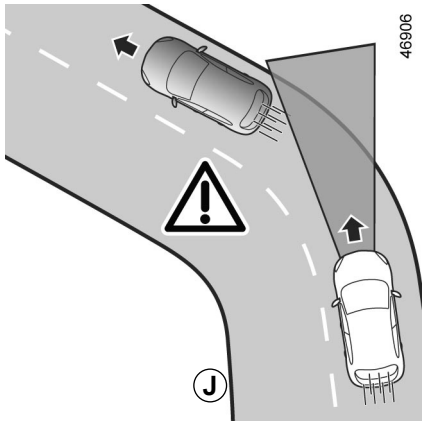

Detection during cornering

When entering a corner or bend, the radar and/or camera may temporarily not be able to detect the vehicle in front (e.g. ***J***).

The system may trigger an acceleration.

When exiting a bend, the system's detection of the vehicle in front may be disrupted or delayed.

The system may trigger abrupt or delayed braking.

ADAPTIVE CRUISE CONTROL (10/14)

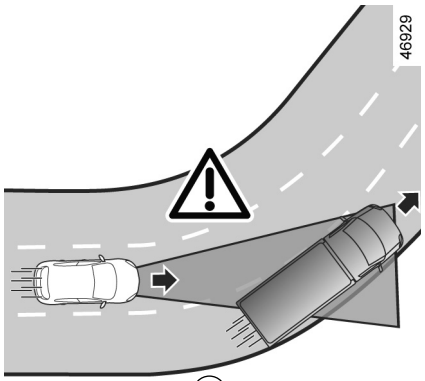

Ⓚ

Detection of vehicles in adjacent lanes

The system may detect vehicles driving on an adjacent lane when:

– you drive into a bend (e.g. ***K***);

– you are driving on a road with narrow lanes;

– the speed of the vehicle on the adjacent lane is slower and if one of these vehicles is located too close to the lane of the other.

The system may incorrectly trigger vehicle slowing or braking.

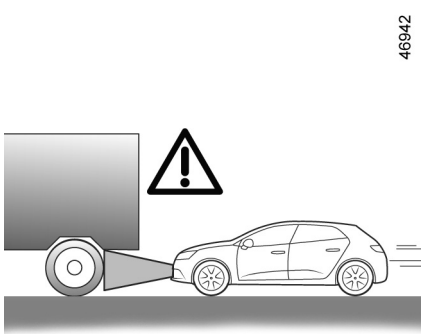

Ⓛ

Vehicles hidden due to variations in ground relief

The system will not detect vehicles hidden due to variations in ground relief or those located outside of the camera and radar detection areas when driving uphill or downhill.

Vehicles outside the camera and radar detection areas.

The system will react late or not at all if the detected vehicles are outside the camera and radar detection areas, particularly in the following cases:

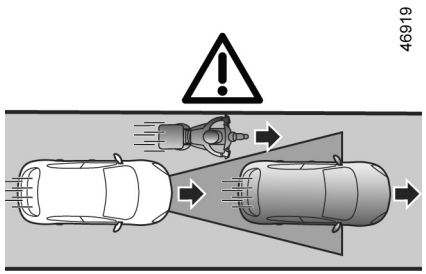

Ⓜ

– vehicles transporting long objects which exceed the line;

– the actual length of tall vehicles (e.g. ***L***) outside the radar detection area (construction machine, agricultural equipment towing vehicle, etc.) ;

– vehicles insufficiently centred in the lane;

– narrow vehicles which are very close (e.g. ***M***).

ADAPTIVE CRUISE CONTROL (11/14)

46931

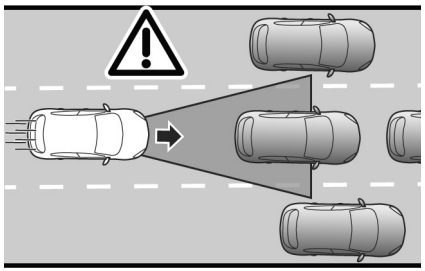

N

Stationary and slow moving vehicles

When your speed is over approximately 31 mph (50 km/h), **the system does not detect**:

– stationary vehicles (e.g ***N***);

– very slow moving vehicles.

When your speed is less than approximately 31 mph (50 km/h), **the system may not react or may react very late** to:

– stationary vehicles (e.g ***N***);

– very slow moving vehicles;

46932

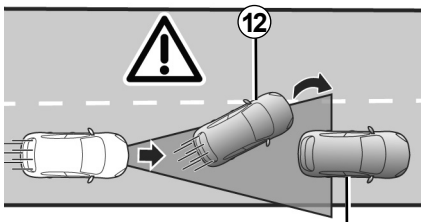

P

– vehicles in front ***12*** that change lane, discovering a stationary vehicle ***13*** (e.g. ***P***);

– when the vehicle is stationary ***14***, when you change lane (e.g. ***Q***).

57120

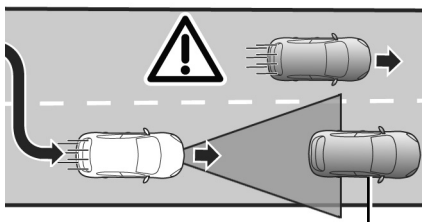

Q

Always be ready to take control of your vehicle when you come upon stationary or very slow moving vehicles (e.g. ***N***).

The adaptive cruise control does not trigger an emergency stop and its braking capability is limited.

ADAPTIVE CRUISE CONTROL (12/14)

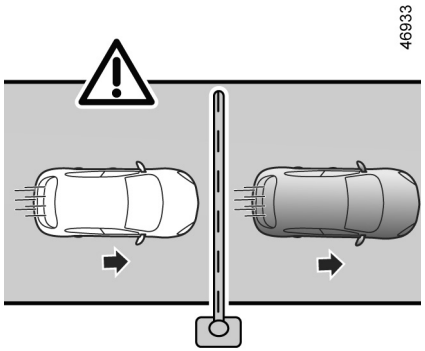

R

Non-detection of fixed obstacles and objects of a small size

The system cannot detect:

– pedestrians, bikes, scooters, etc. ;

– animals;

– fixed obstacles (toll barriers, walls, etc.) (e.g. ***R***).

These are not taken into account by the system. They do not trigger any alert or reaction by the system.

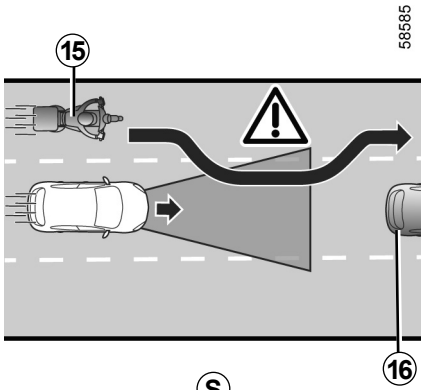

S

Detection of vehicles moving into lane at high speed

If your vehicle is overtaken by another vehicle driving at high speed ***15*** (motorcycle, car, etc.) and the vehicle is temporarily between you and the vehicle in front ***16***, **the system may trigger undue acceleration, slowing or braking.**

ADAPTIVE CRUISE CONTROL (13/14)

This function is an additional driving aid. It can under no circumstances replace the driver's responsibility to respect speed limits and safe distances and to be vigilant.
The driver must always be in control of the vehicle.
The driver must always adapt their speed to the surroundings and driving conditions, regardless of system indications.
Except for lines delimiting lanes, traffic indicators (traffic lights, signs, pedestrian crossings etc.) are not recognised by the system. These do not trigger any alert or reaction by the system.
The system should under no circumstances be taken to be an obstacle detector or an anti-collision system.
The adaptive cruise control must only be used on a motorway (or multi-lane road separated by a barrier).

System servicing/repairs.
– In the event of an impact, the radar and/or camera alignment may be changed and its operation may consequently be affected. Deactivate the system and consult an authorised dealer.
– Any work in the proximity of the radar and/or camera (replacements, repairs, windscreen modifications, paintwork etc.) must be carried out by a qualified professional.

Only an authorised dealer is qualified to service the system.

Deactivating the function

You must disable the function if:
– the vehicle is travelling on a windy road;
– the vehicle is being towed (breakdowns);
– the vehicle is towing a trailer or a caravan;
– the vehicle is being driven in a tunnel or close to a metallic structure;
– the vehicle arrives at a toll point, a roadwork area or on a narrow lane;
– the vehicle is being driven up or down a very steep slope;
– the visibility is poor (glaring sun, fog etc.);
– the vehicle is being driven on a slippery road surface (rain, snow, gravel, etc.);
– the weather conditions are poor (rain, snow, side winds, etc.);
– the radar area has been damaged (impacts etc.) ;
– the camera area has been damaged (e.g. on the inside or outside of the windscreen);
– the windscreen is cracked or distorted.

In the event of the system behaving abnormally, deactivate it and consult an authorised dealer.

ADAPTIVE CRUISE CONTROL (14/14)

In the event of system disturbance

Some conditions can disturb or damage the operation of the system, such as:

– the windscreen or radar area is obscured (by dirt, ice, snow, condensation, number plate etc.);

– a complex environment (tunnel etc.);

– poor weather conditions (snow, heavy rain, hail, black ice, etc.);

– poor visibility (night, fog etc.);

– poor contrast between the vehicle preceding it and the surrounding area (e.g. white vehicle in a snowy area etc.) ;

– being dazzled (glaring sun, lights of vehicles travelling in the opposite direction etc.);

– narrow, winding or undulating road (tight bends etc.) ;

– a slower vehicle with a significant difference in speed;

– use of mats not adapted to the vehicle. On the driver's side, only use mats suitable for the vehicle, attached with the pre-fitted components, and check the fitting regularly. Do not lay one mat on top of another. **There is a risk of wedging the pedals.**

In these cases, the system may wrongly intervene.

Risk of unwanted braking or acceleration.

Many unforeseen situations may affect the system operation. Certain objects or vehicles that can appear in the camera or radar detection zone may be interpreted by the system incorrectly, possibly leading to inappropriate acceleration or braking.

You should always be attentive to sudden events that might occur while you are driving. Always keep your vehicle under control by keeping your feet near the pedals, so that you are ready to act in any event.

MOTORWAY AND TRAFFIC ASSISTANT (1/16)

The Motorway and Traffic Assistant is a driving aid system designed for use on long motorway journeys, where traffic is flowing or in jams.

Depending on the vehicle, this system comprises the "**Stop and Go Adaptive cruise control function**" ➥ 2.86 and the "**Lane centring**" function.

When these two functions are activated simultaneously, the system allows the driver to:

– maintain vehicle speed based on a previously saved speed;

– adjust the distance between this vehicle and the vehicle in front;

– direct the vehicle to the centre of the lane.

Important: you should keep your feet near the pedals and your hands on the steering wheel at all times to prepare for any event.

The "Stop and Go adaptive cruise control" function

Based on information from a radar or camera, the Stop and Go adaptive cruise control function gives you the option of maintaining a selected speed, known as the cruising speed, while keeping a safe distance from the vehicle in front in the same lane.

If the vehicle in front stops, the Stop and Go adaptive cruise control may brake your vehicle to a complete stop before setting off again.

The system controls acceleration and deceleration of your vehicle using the engine and braking system.

The "Stop and Go adaptive cruise control" function can be activated from 0 to 105 mph (0 to 170 km/h) according to conditions on the road (traffic, weather, etc.).

It is represented by the following symbol  ➥ 2.86.

Note:

– the driver must observe the maximum speed limit and safe distances in the country where they are driving;

– the Stop and Go adaptive cruise control can brake the vehicle up to a third of the braking capacity. Depending on the situation, the driver may need to brake harder.

The Stop and Go adaptive cruise control does not trigger an emergency stop and its braking capability is limited.

MOTORWAY AND TRAFFIC ASSISTANT (2/16)

The “Lane centring” function

Using information from a camera, the “Lane Centring” function manipulates the steering system to direct the vehicle to the middle of the lane. This function is only available while the Stop and Go adaptive cruise control is activated ➥ 2.86.

If the conditions allow it, the function is available between:

– 0 mph and 99 mph (0 and 160 km/h) approximately with a vehicle in front;

or

– 37 mph (60 km/h) et 99 mph (160 km/h) approximately without a vehicle in front.

The “Lane Centring” function is a comfort feature. It is represented by the symbol .

Note: in the event of a sharp bend, the function’s lateral retention capacities are limited and require the driver to take immediate action on the steering wheel.

Additional information

Depending on the vehicle, the “Motorway and Traffic Assistant” function may be used with other driving aid functions.

Please note that:

– activating the speed limiter causes deactivation of the system;

– activation of the “Lane Centring” function leads to suspension of the “Lane Departure Warning” or “Lane Keep Assist” functions if these have been activated. They will be reactivated when the driver decides to stop the “Lane Centring” function.

MOTORWAY AND TRAFFIC ASSISTANT (3/16)

58924

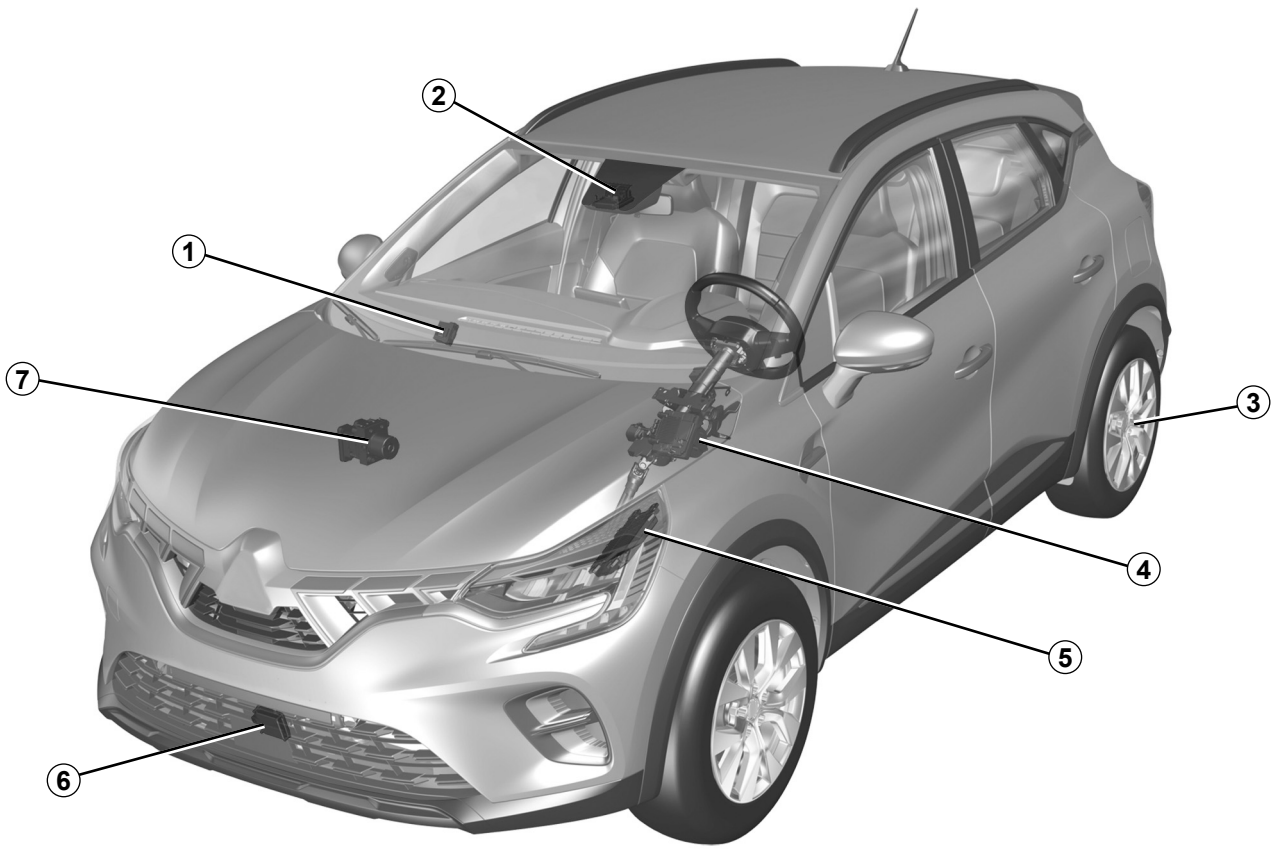

2.102

OVSE23E2

MOTORWAY AND TRAFFIC ASSISTANT (4/16)

Computer *1*

Receives information from the radar and camera to determine the vehicle trajectory and speed (acceleration or braking). Amongst other things, it controls activation/deactivation of the system (door opening, etc.).

Camera *2*

Detects markings on the ground and the position of vehicles on the various traffic lanes. It complements the information transmitted by the ***6*** radar.

Make sure the windscreen is not obscured (by dirt, mud, snow, etc.).

Electronic parking brake *3*

Keeps the vehicle stationary under certain conditions.

Power-assisted steering *4*

Operates the front wheels to assist the trajectory of your vehicle according to details transmitted by the ***1*** computer. It also enables detection of the driver's hands on the steering wheel.

Engine computer *5*

It controls and directs the engine to carry out the required acceleration.

Radar *6*

Calculates the distance between your vehicle and the vehicle in front.

The system's maximum range is approximately 150 metres. This may vary according to the road conditions (ground relief, weather conditions, etc.) Ensure that the radar area is not obstructed (dirt, mud, snow, a badly fitted front number plate), impacted, modified (including painting) or hidden by any accessory fitted on the front of the vehicle (on the grille or logo etc.).

Active vehicle control *7*

This system provides information on vehicle dynamics to the computer ***1*** (speed, lateral acceleration etc.) and acts on the braking system to control deceleration and to keep the vehicle stationary.

The radar and camera zones must be kept clean and free of any tampering in order to ensure the proper operation of the system.

OVSE23E2

MOTORWAY AND TRAFFIC ASSISTANT (5/16)

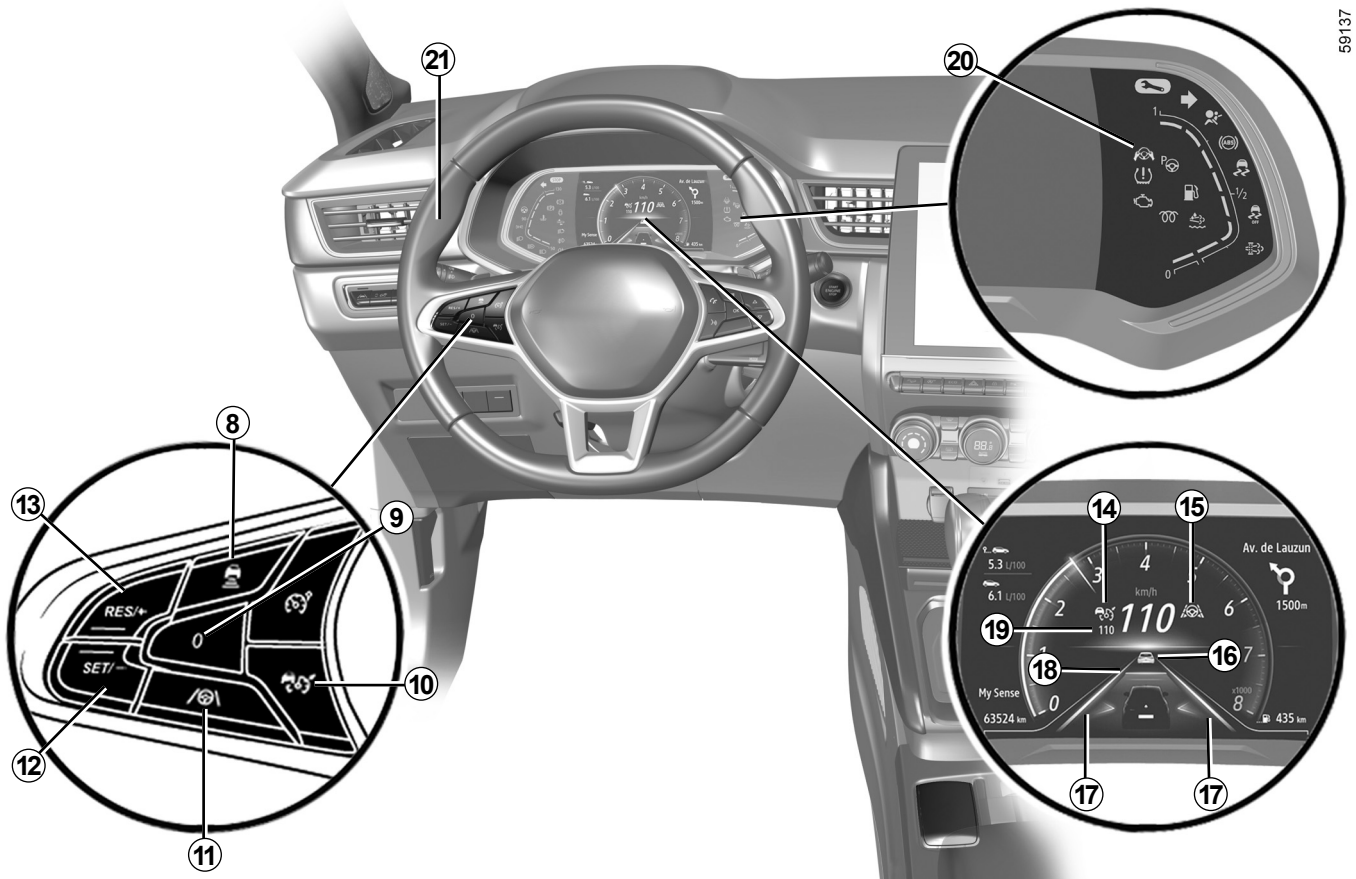

OVSE23E2

MOTORWAY AND TRAFFIC ASSISTANT (6/16)

Controls

8 Safe distance settings

9 Set active functions to standby (with cruising speed saved) (0).

10 Adaptive cruise control main stop/start switch .

11 “Lane Centring” function activation/deactivation switch .

12 Cruising speed activation, storage and decrease switch (SET/-).

13 Switch to activate and increase cruising speed or to recall the memorised cruising speed (RES/+).

Displays on the instrument panel

14 “Stop and Go adaptive cruise control” function warning light .

15 “Lane Centring” function warning light .

16 Vehicle in front.

17 Left-hand and right-hand line indicators.

18 Stored safe distance.

19 Stored cruising speed.

20 Hands off steering wheel detection warning light .

Steering wheel *21*

The driver must always keep their hands on the steering wheel. If too much force is applied when turning the steering wheel, the “Lane Centring” function is put on standby so the driver can regain control of the vehicle.

Under certain conditions (sharp bends, etc.) a vibration may be triggered on the steering wheel to warn the driver that they must regain control of the vehicle.

If the driver does not handle the steering wheel (no hands are detected) the “Lane centring” function is deactivated after several alerts.

MOTORWAY AND TRAFFIC ASSISTANT (7/16)

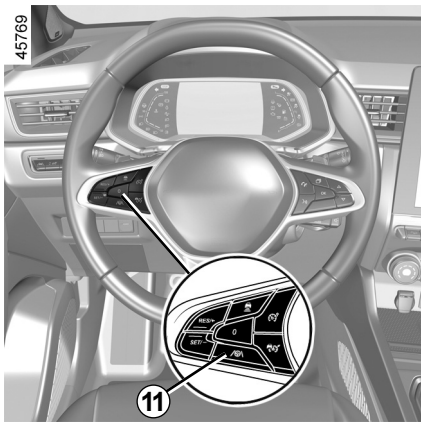

Activating the “Lane Centring” function

Once the Stop and Go adaptive cruise control is activated ➥ 2.86, press button ***11*** to activate the “Lane Centring” function.

The “Lane centering activated” message appears on the instrument panel accompanied by the ***15*** warning light and the symbol to confirm that the function is activated.

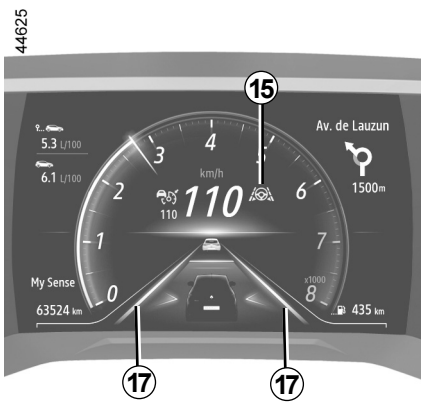

Note: you must keep your hands on the driving wheel when using the “Lane Centring” function. The symbol is displayed to confirm that the function is activated.

The warning light ***15*** is displayed in green and the left-hand and right-hand line indicators ***17*** are displayed on the instrument panel to confirm that the function is activated and directing your vehicle to the centre of the lane.

Note: if you press button ***11*** when the Stop and Go adaptive cruise control is not activated, the message: “First activate Adapt. cruise ct” appears on the instrument panel.

MOTORWAY AND TRAFFIC ASSISTANT (8/16)

“Lane Centring” function on standby

The “Lane Centring” function is put on standby automatically when:

– the Stop and Go adaptive cruise control is put on standby ➥ 2.86;

– the system no longer detects the lines or only one line is detected in your lane;

– the lane is too narrow or too wide;

– the system does not detect any hands on the steering wheel;

– the bend is too sharp;

– the vehicle speed is over approximately 99 mph (160 km/h);

– the vehicle speed is below approximately 37 mph (60 km/h), without any vehicle in front;

– the vehicle touches or breaches a line;

– the system is temporarily disrupted (for example: camera obscured by dirt, mud, snow,condensation, etc.).

Certain actions carried out by the driver also suspend the “Lane Centring” function:

– activating the indicators;

– too much force is used when handling the steering wheel.

Standby of the function is confirmed by the ***15*** warning light and the left-hand and right-hand line indicators ***17*** appearing in grey on the instrument panel.

Important: you should keep your feet near the pedals and your hands on the steering wheel at all times to prepare for any event.

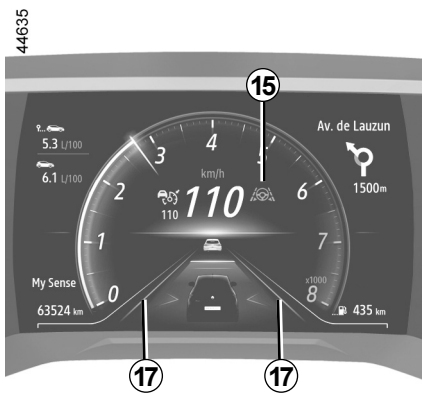

Once the conditions are met, the function again directs the vehicle to the centre of the lane. The ***15*** warning light and left-hand and right-hand line indicators ***17*** are displayed in green on the instrument panel.

You can affect **the vehicle trajectory** at any point by turning the steering wheel.

OVSE23E2

MOTORWAY AND TRAFFIC ASSISTANT (9/16)



“Hands on steering wheel” alert

When the “Lane Centring” function no longer detects your hands on the steering wheel, several warning levels will be triggered:

– **after 15 seconds**, the message: Keep hands on steering wheel is shown in yellow on the instrument panel ***22***;

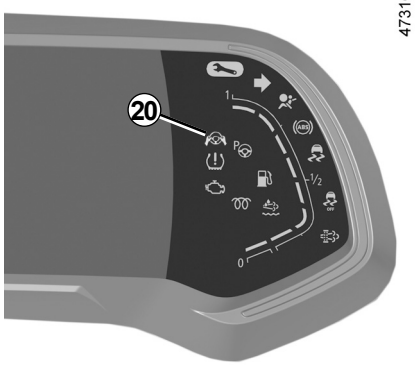

– **after approximately 30 seconds**, the message: Keep hands on steering wheel appears on the instrument panel ***22*** and the warning light ***20***  appears in red, accompanied by an audible signal of gradually increasing volume;

– **after approximately 45 seconds,** the audio sources go on standby, the audible signal sounds continually, the warning light ***20***  is switched off and the message “Lane centering deactivated” appears in red on the instrument panel ***22***: **the “Lane Centring” function is deactivated.**

Note: in some situations, the “Lane Centring” function may no longer detect your hands on the steering wheel and may sound a signal:

– the vehicle is moving along a long straight lane and the driver’s hands are immobile on the steering wheel;

– the driver is holding the steering wheel very lightly;

– ...

If the **“**Lane Centring” function is deactivated due to the driver’s hands not being detected on the steering wheel, the Stop and Go adaptive cruise control function continues to function.

In the first two alert levels, when the system again detects the presence of the driver’s hands on the steering wheel, the system stops the alerts. The function continues to direct the vehicle to the centre of the lane.

MOTORWAY AND TRAFFIC ASSISTANT (10/16)

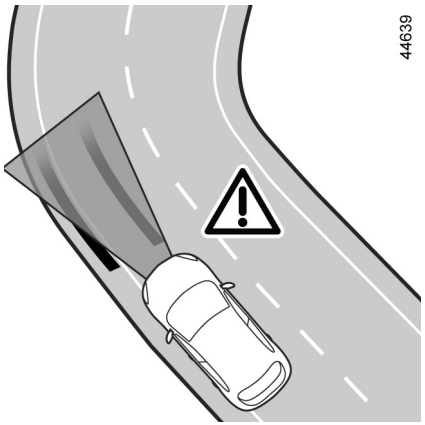

In the case of a sharp bend

In the case of a sharp band, and depending on the vehicle speed, the function's side retaining capacities will be limited and require the driver to carry out immediate action on the steering wheel so that the function can continue to maintain the vehicle in the centre of the lane.

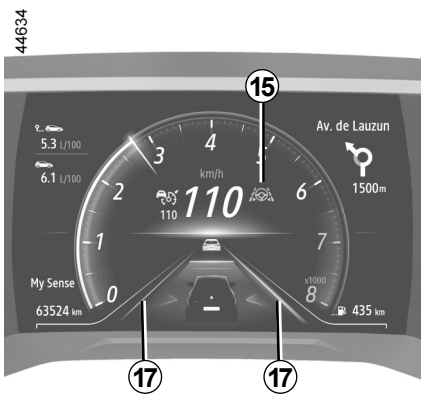

If the driver does not intervene, the function triggers the vibration of the steering wheel to signal that the vehicle is about to breach a line and that the driver needs to carry out immediate action.

The ***15*** warning light and the left-hand or right-hand line indicator ***17*** appear in red on the instrument panel.

If the vehicle crosses a line completely and moves out of lane, the "Lane Centring" function is put on standby. Standby of the function is confirmed by the ***15*** warning light and the left-hand and right-hand line indicators ***17*** appearing in grey on the instrument panel.

MOTORWAY AND TRAFFIC ASSISTANT (11/16)

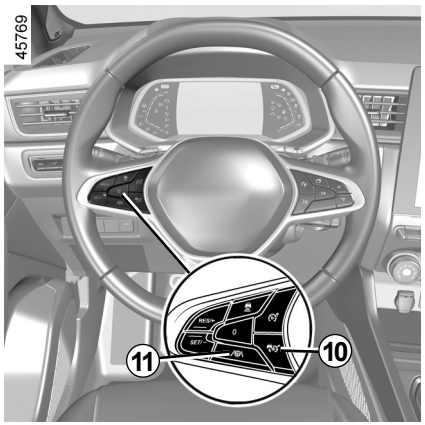

Deactivating the “Lane Centring” function

The “Lane Centring” function is deactivated when:

– you press the ***11*** switch. The function’s deactivation is confirmed by the appearance of the “Lane centering deactivated” message on the instrument panel;

Note: pressing the ***11*** switch once deactivates the “Lane centring” function but does not affect operation of the Stop and Go adaptive cruise control function.

– the Stop and Go adaptive cruise control is deactivated ➥ 2.86;

Note: pressing the ***10*** button once deactivates both the “Stop and Go adaptive cruise control” function and the “Lane Centring” function.

– the system will no longer detect the driver’s hands on the steering wheel for a period over 45 seconds approximately.

The ***15*** warning light and the left-hand and right-hand line indicators ***17*** disappear from the instrument panel.

MOTORWAY AND TRAFFIC ASSISTANT (12/16)

Temporary unavailability

The radar is able to detect vehicles in front of your vehicle. The system cannot operate correctly if the radar detection area is obscured or if its signal is disrupted.

If the radar detection area is obstructed or the radar signal is disrupted, the message “Front radar no visibility” is displayed on the instrument panel and the “Stop and Go adaptive cruise control” function is interrupted.

The green warning light  disappears to confirm that the function has been automatically deactivated.

Ensure that the radar area is not obstructed (dirt, mud, snow, a badly fitted front number plate), impacted, modified (including painting) or hidden by any accessory fitted on the front of the vehicle (on the grille or logo etc.).

Conditions in certain geographical areas may hinder the function, for example:

– arid zones, tunnels, long bridges or lightly used roads without road lines, without signs or trees nearby;

– a military or airport zone.

You must leave such areas in order for the function to work.

In all cases, if the message is not erased after the engine is restarted, please contact an authorised dealer.

Operating faults

If a Lane Centring function operating fault is detected, the message “Check lane centering” is displayed on the instrument panel and the function is disabled.

The Stop and Go adaptive cruise control function remains in operation.

Consult an approved dealer.

If a “Stop and Go adaptive cruise control” function operating fault is detected, the “Check Adaptive Cruise control” message appears on the instrument panel and both the “Stop and Go adaptive cruise control” function and the “Lane Centring” function are interrupted.

Consult an approved dealer.

If an operating fault is detected on one or more components of the “Motorway and Traffic Assistant” system, the warning light appears on the instrument panel, alongside, depending on the nature of the fault, the message:

– “Front camera to check”;

– “Front radar to check”;

– “Camera/Radar to check”;

– “Check vehicle”.

The two “Stop and Go adaptive cruise control” and “Lane Centring” functions are interrupted.

Consult an approved dealer.

MOTORWAY AND TRAFFIC ASSISTANT (13/16)

The “Motorway and Traffic Assistant” function is an additional driving aid.

It can under no circumstances replace the driver’s responsibility to respect speed limits and safe distances and to be vigilant.

The driver must always be in control of the vehicle.

The driver must always adapt their trajectory and speed according to the surroundings and traffic conditions.

The “Motorway and Traffic Assistant” uses the “Stop and Go adaptive cruise control” function and the “Lane Centring” function. It must only be used on a motorway or multi-lane road (separated by a barrier).

It must not be used in heavy traffic, on winding or slippery roads (black ice, aquaplaning, gravel) or during bad weather (fog, rain, side winds etc.).

There is a risk of accidents.

MOTORWAY AND TRAFFIC ASSISTANT (14/16)

The “Motorway and Traffic Assistant” function is an additional driving aid. it can under no circumstances replace the driver's responsibility to respect speed limits and safe distances and to be vigilant.

The driver must always be in control of the vehicle.

The driver must always adapt their trajectory and speed according to the surroundings and driving conditions, regardless of system indications.

Except for lines delimiting lanes, traffic indicators (traffic lights, signs, pedestrian crossings, etc.) are not recognised by the system. These do not trigger any alert or reaction by the system.

The “Motorway and Traffic Assistant” uses the Stop and Go adaptive cruise control function and the Lane Centring function. The system should under no circumstances be taken to be an obstacle detector or an anti-collision system.

The Motorway and Traffic Assistant function must only be used on a motorway or multi-lane road separated by a barrier.

System servicing/repairs

– In the event of an impact, the radar and/or camera alignment may be changed and its operation may consequently be affected. Deactivate the system and consult an authorised dealer.

– Any work in the proximity of the radar and/or camera (replacements, repairs, windscreen modifications, paintwork etc.) must be carried out by a qualified professional.

Only an authorised dealer is qualified to service the system.

MOTORWAY AND TRAFFIC ASSISTANT (15/16)

Deactivating the system

You must deactivate the system if:

– the vehicle is travelling on a windy road;
– the vehicle is being towed (breakdowns);
– the vehicle is being driven with an emergency spare wheel;
– the vehicle is towing a trailer or a caravan;
– the vehicle is being driven in a tunnel or close to a metallic structure;
– the vehicle arrives at a toll point, a roadwork area or on a narrow lane;
– the vehicle is being driven up or down a very steep slope;
– the visibility is poor (glaring sun, fog etc.);
– the weather conditions are poor (rain, snow, side winds, etc.);
– the vehicle is being driven on a slippery road surface (rain, snow, gravel, etc.);
– the area of the camera has been damaged (e.g. on the inside or outside of the windscreen);
– the windscreen is cracked or distorted;
– the radar area has been damaged (impacts etc.).

In the event of the system behaving abnormally, deactivate it and consult an authorised dealer.

MOTORWAY AND TRAFFIC ASSISTANT (16/16)

Some conditions can disrupt or damage the operation of the system, for example:

– obstruction of the windscreen or the radar area (by dirt, ice, snow, condensation etc.). Frequently check the cleanliness and condition of the windscreen, front wiper blades and front bumper;
– a complex environment (tunnel etc.);
– poor weather conditions (snow, heavy rain, hail, black ice, etc.);
– poor visibility (night, fog etc.);
– poor contrast between the vehicle preceding it and the surrounding area (e.g. white vehicle in a snowy area etc.);
– being dazzled (glaring sun, lights of vehicles travelling in the opposite direction etc.);
– narrow, winding or undulating road (tight bends etc.);
– the tar lines detected as a line by the system;
– narrowing/widening lanes;
– road markings which are worn, lacking in contrast or very widely spaced from one another (lines partially erased etc);
– multiple markings on the road (roadworks area, slip roads connecting to adjacent motorways, hard shoulder etc.);
– a slower vehicle with a significant difference in speed;
– use of mats not adapted to the vehicle. On the driver's side, only use mats suitable for the vehicle, attached with the pre-fitted components, and check the fitting regularly. Do not lay one mat on top of another. **There is a risk of wedging the pedals.**

In these cases, the system may wrongly intervene.

– Risk of unwanted braking or acceleration.
– Risk of unwanted, incorrect correction or no correction of trajectory.

Many unforeseen situations may affect the system operation. Certain objects or vehicles that can appear in the camera or radar detection zone may be interpreted by the system incorrectly, possibly leading to inappropriate acceleration or braking.

You should always be attentive to sudden events that might occur while you are driving. Always maintain your vehicle under control by keeping your feet near the pedals and your hands on the steering wheel, so that you are ready to act in any event.

PARKING DISTANCE CONTROL (1/7)

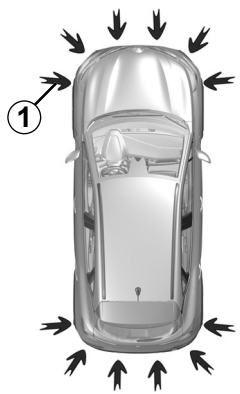

58623

Operating principle

Ultrasonic sensors, indicated by arrows ***1***, are fitted in the bumpers to measure the distance between the vehicle and an obstacle.

Depending on the vehicle, the system detects obstacles to the front, the rear and the sides of the vehicle.

The parking distance control system is only activated when the vehicle is driven at a speed below approximately 6 mph (10 km/h).

The function does not take into account towing or carrying systems that are not recognised by the system.

This measurement is indicated by beeps which become more frequent the closer you come to the obstacle, until they become a continuous beep when the vehicle is approximately 20 to 30 centimetres from the obstacle.

Location of the ultrasonic sensors *1*

Ensure that the ultrasonic sensors indicated by the arrows ***1*** are not obscured (by dirt, mud, snow, a badly fitted/attached number plate), impacted, modified (including paintwork) or obstructed by any accessory fitted to the rear and/or, depending on the vehicle, to the front or sides of your vehicle.

This function is an additional driving aid.

Under no circumstances should it replace the driver's care or responsibility whilst reversing.

The driver should always be ready for sudden incidents while driving: always ensure that there are no small, narrow moving obstacles (such as a child, animal, pushchair, bicycle, stone, post, etc.) in the blind spot when manoeuvring.

OVSE23E2

PARKING DISTANCE CONTROL (2/7)

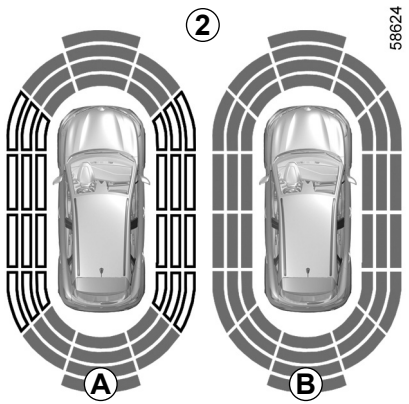

Note: the display ***2*** shows the vehicle surroundings and emits beeps.

It is necessary to travel a few metres before the side detection is activated.

If all areas have a grey background, the whole area around the vehicle is being monitored:

– ***A***: analysis of the vehicle surroundings in progress;

– ***B***: analysis of the vehicle surroundings carried out.

Operation

Most objects located less near the front, rear and sides of the vehicle are detected.

Depending on the distance of the obstacle, the frequency of the beep will be higher while approaching it, and will become a continuous beep around 20 cm away for obstacles to the sides, and around 30 cm for obstacles to the front or rear. The green, orange (or yellow depending on the vehicle) and red zones will be shown on the ***C*** display.

Note: in the event of a change in trajectory during a manoeuvre, the risk of collision with an obstacle may be signalled late.

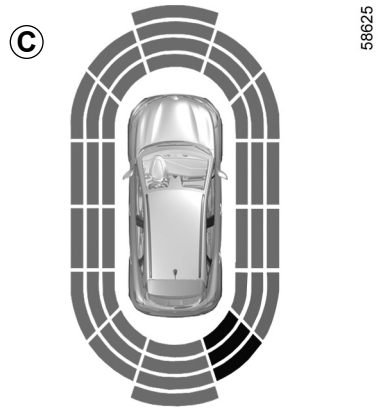

An impact to the underside of the vehicle while manoeuvring (e.g. striking a post, raised kerb or other street furniture) may result in damage to the vehicle (e.g. deformation of an axle).

To avoid any risk of accident, have your vehicle checked by an approved dealer.

PARKING DISTANCE CONTROL (3/7)

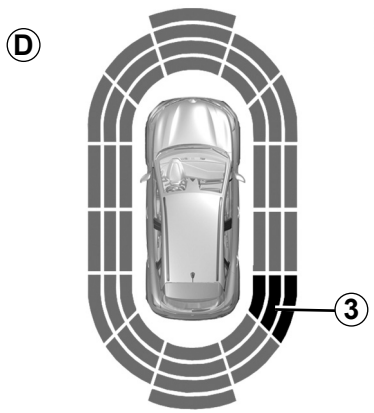

Detection of obstacles to the side

Depending on the direction of the wheels, the system determines the trajectory of the vehicle and notifies the driver of any risk or otherwise of a collision with an obstacle ***3*** to the side of the vehicle.

If a side obstacle is detected:

– the beeps become faster and then sound continuously as the obstacle gets nearer. Green, orange and red zones will be displayed on the display ***D***;

– if there is no risk of collision, no beep will sound when approaching the obstacle. Green, orange and red zones will be displayed interspersed on the display ***D***.

Note: in the event of a change in trajectory during a manoeuvre, the risk of collision with an obstacle may be signalled late.

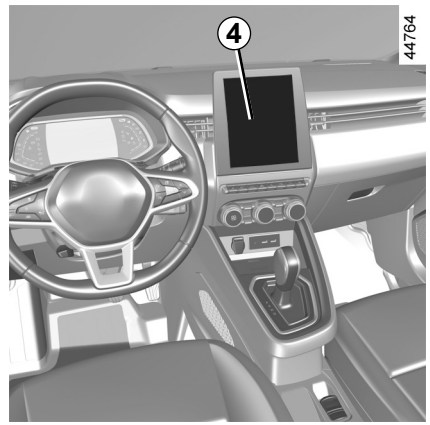

Activation/deactivation

Vehicles fitted with a multimedia screen.

To activate or deactivate the various zones covered by the ultrasonic detectors, please refer to the multimedia instructions.

Select “ON” or “OFF”.

An impact to the underside of the vehicle while manoeuvring (e.g. striking a post, raised kerb or other street furniture) may result in damage to the vehicle (e.g. deformation of an axle).

To avoid any risk of accident, have your vehicle checked by an approved Dealer.

PARKING DISTANCE CONTROL (4/7)

Vehicles not fitted with a multimedia screen

With the vehicle stopped, press the ***6*** switch to deactivate parking distance control. Warning light ***5*** in the switch lights up. Press again on the ***6*** switch to activate the function. The indicator light built into the ***5*** switch goes out.

Adjustment

Vehicles fitted with a multimedia screen *4*

Depending on the vehicle, with the engine running, some settings can be adjusted from the multimedia screen ***4***. Please refer to the multimedia instructions for further information.

Parking distance control audio volume

Adjust the volume of the parking distance control by pressing **+** or **-**.

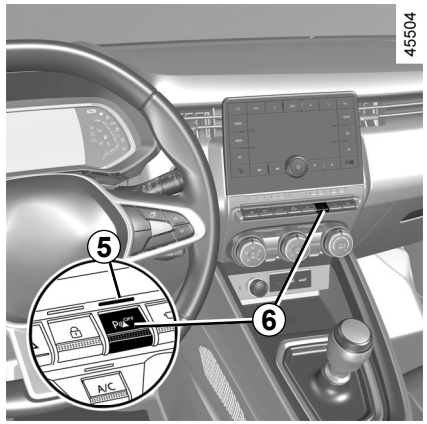

System sound
Enables the system sound to be chosen.

Deactivating the system sound
Activate or deactivate the parking distance control sound.

Note: if you deactivate the sound, you will no longer be notified with beeps when approaching an obstacle.

When the vehicle is travelling at a speed below approximately 6 mph (10 km/h), some noises (motorcycle, lorry, pneumatic drill etc.) may trigger the beeping sound of the parking distance control.

PARKING DISTANCE CONTROL (5/7)

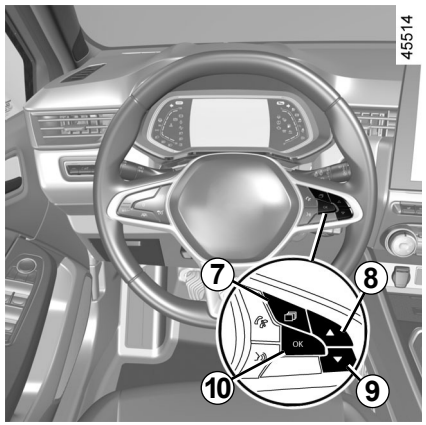

Vehicles not fitted with a multimedia screen

– With the vehicle stopped, press the ***7*** switch as many times as required to reach the “Vehicle” tab;

– press the ***8*** or ***9*** control repeatedly to reach the “Settings” menu. Press the switch ***10*** OK ;

– press the ***8*** or ***9*** control repeatedly to reach the “PARKING ASSIST” menu. Press the switch ***10*** OK;

– select “Beep volume” to adjust the volume of Park Assist using control ***8*** or ***9***.

Deactivating the parking distance control manually

You must disable the function if:

– if towing, carrying or trailer equipment that is unrecognised by the system is present in front of the ultrasonic sensors;

– in the event of damage to the ultrasonic sensors.

Automatic deactivation of the parking distance control

The system deactivates:

– when the vehicle speed is above approximately 6 mph (10 km/h);

– depending on the model, when the vehicle is stationary for more than approximately 5 seconds and an obstacle is detected (such as when in a traffic jam, etc.);

– when the vehicle is in neutral on manual gearboxes, or in position **N** or **P** on automatic gearboxes;

– when an operating fault is detected.

Note: if the vehicle is fitted with a towbar recognised by the system, only the rear Park Assist function is deactivated.

Operating faults

When the system detects an operating fault, a beep sounds for approximately three seconds each time reverse gear is selected and the message “Check parking distance control” appears on the instrument panel. Consult an approved dealer.

An impact to the underside of the vehicle while manoeuvring (e.g. striking a post, raised kerb or other street furniture) may result in damage to the vehicle (e.g. deformation of an axle).

To avoid any risk of accident, have your vehicle checked by an approved dealer.

PARKING DISTANCE CONTROL (6/7)

System servicing/repairs

– In the event of an impact, the alignment of the sensors may be altered and their operation may consequently be affected. Deactivate the function and consult an authorised dealer.

– Any work in the area where the sensors are located (repairs, replacements, etc.) must be carried out by a qualified professional.

Only an authorised dealer is qualified to service the system.

System disturbance

Some conditions can disrupt or damage the operation of the system, for example:

– poor weather conditions (rain, snow, hail, black ice, etc.);

– in the event of exposure to strong electromagnetic waves (under high-voltage lines, etc.);

– some types of noise (motorcycle, lorry, pneumatic drill etc.);

– fitting an unsuitable towing ball or hook.

Risk of false alarms or absence of warnings

In the event of the system behaving abnormally, deactivate it and consult an authorised dealer.

PARKING DISTANCE CONTROL (7/7)

Limitation of the system operation

– The area around the sensors must be kept clean and free of any modifications in order to ensure the proper operation of the system.
– Small objects moving close to the vehicle (motorcycles, bicycles, pedestrians, etc.) may not be recognised by the system.
– The system may not detect objects that are too close to the vehicle.
– The system may not provide a warning when the other vehicles or objects are travelling at a significantly different speed.
– During a change in trajectory, during a manoeuvre, the system may report obstacles with a delay.
– When the vehicle is towing a trailer, the rear Park Assist system must be deactivated

Deactivating the function

You must disable the function if:

– the area around the sensors has been damaged (rear bumper);
– the vehicle is equipped with a towing device that is not recognised by the system (ball, hook, adapter, etc.).

REVERSING CAMERA (1/2)

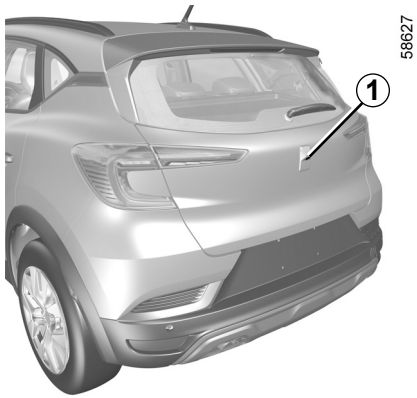

Operation

When the vehicle is reversing, the camera ***1*** on the luggage compartment lid transmits a view of the area surrounding the rear of the vehicle to the multimedia display ***2*** accompanied by two guiding lines ***3*** and ***4*** (fixed and mobile).

This system uses several guidelines for its operation (mobile for trajectory and fixed for distance).

When the red zone is reached, use the bumper image to stop accurately.

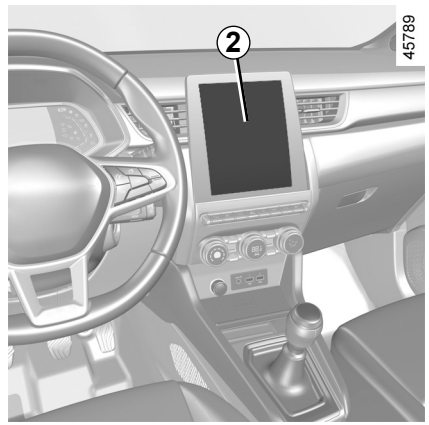

Fixed clearance gauge *3*

The fixed clearance gauge comprises coloured markers ***A***, ***B*** and ***C*** indicating the distance behind the vehicle:

– ***A***(red) approximately 30 centimetres from the vehicle;

– ***B*** (yellow) approximately 70 centimetres from the vehicle;

– ***C*** (green) approximately 150 centimetres from the vehicle.

This gauge remains fixed and indicates the vehicle trajectory if the wheels are in line with the vehicle.

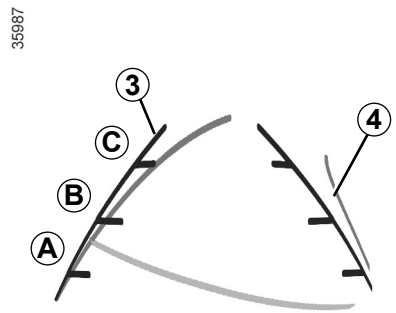

***4* moving guide line:**

This is shown in blue on the multimedia screen ***2***.

It indicates the vehicle trajectory according to the position of the steering wheel.

Special feature

Make sure that the camera is not obscured (by dirt, mud, snow, condensation etc.).

REVERSING CAMERA (2/2)

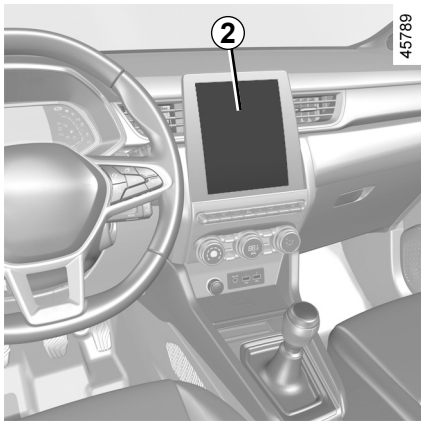

Activating, deactivating the reversing camera

To activate or deactivate the function from the multimedia screen **2**, refer to the multimedia instructions.

Activate or deactivate the reversing camera and confirm your choice.

You can also adjust the camera image settings (brightness, contrast, etc.).

Operating faults

When reverse gear is engaged, if the system detects an operating fault, a black screen is displayed temporarily on the multimedia screen **2**.

This may be caused by a fault affecting the camera or screen (clearness, fixed image, delayed communication etc.).

If the temporary display of the black screen persists, please consult an approved dealer.

The screen shows a reverse mirror image.

The frames are a representation projected on a flat surface. This information is to not be taken into account when superimposed on a vertical object or an object on the ground.

Objects which appear on the edge of the screen may be deformed.

In very bright light (snow, vehicle in sunshine, etc.), the camera vision may be adversely affected.

If the boot is open or poorly closed, the message “WARNING: Boot Open” appears and the camera display disappears.

This function is an additional aid.

It cannot, therefore, under any circumstances replace the vigilance or the responsibility of the driver.

The driver should always be ready for sudden incidents while driving: always ensure that there are no small, narrow moving obstacles (such as a child, animal, pushchair, bicycle, stone, post, etc.) in the blind spot when manoeuvring.

REVERSING CAMERA (3/3)

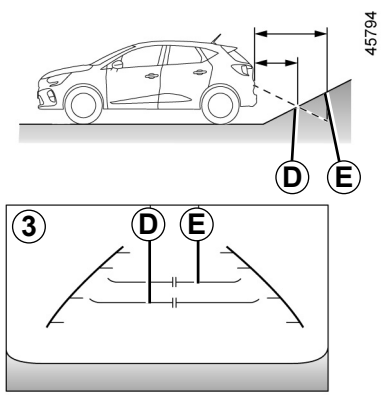

Difference between the estimated distance and actual distance

Reversing towards a steep uphill slope

The fixed guidelines ***3*** show the distances as closer than they actually are.

The objects shown on the screen are actually further away on the slope.

For example, if the screen displays an object at ***D***, the actual distance of the object is at ***E***.

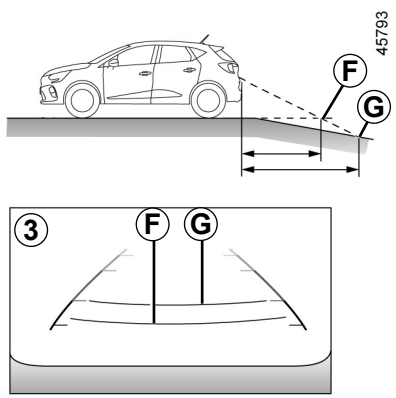

Reversing towards a steep downhill slope

The fixed guidelines ***3*** show the distances as further than they actually are.

Therefore, the objects shown on the screen are actually closer on the slope.

For example, if the screen displays an object at ***G***, the actual distance of the object is at ***F***.

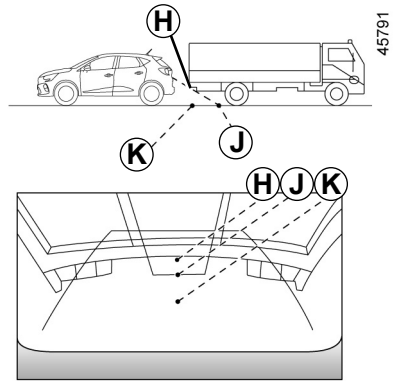

Reversing towards a protruding object

Position ***H*** seems further than position ***J*** on the screen.

However, position ***H*** is at the same distance as position ***K***.

The trajectory indicated by the fixed and mobile guidelines do not take into account the height of the object.

So there is a risk that the vehicle may collide with the object when reversing towards position ***K***.

AUTOMATIC TRANSMISSION (1/4)

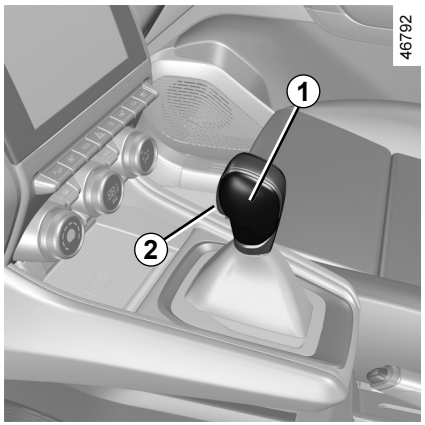

Selector lever *1*

P: park

R: reverse

N: Neutral

D: automatic mode

The ***4*** display on the instrument panel shows the position engaged by the selector lever ***1*** or displays the gear engaged in manual mode.

Note: press the ***2*** button to exit position **P** or to shift from position **D** or **N** to position **R** or **P**.

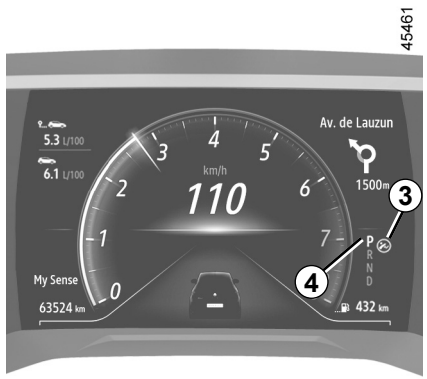

Operation

With gear lever ***1*** in position **P**, start the engine.

To move out of position **P**, you must depress the brake pedal before pressing the unlocking button ***2***.

With your foot on the brake pedal (warning light ***3*** on the display goes out), move the lever out of position **P**.

Only engage D or R when the vehicle is stopped, with your foot on the brake and the accelerator pedal released.

Driving in automatic mode

Put lever ***1*** into position **D**.

In most road conditions you will encounter, you will not need to touch your lever again: the gears will change automatically at the right time and at the most suitable engine speed because the automatic system takes into account the vehicle load and road contour and adjusts itself to the particular driving style you have chosen.

Economical driving

When driving, always leave the lever in position **D**, keeping the accelerator pedal lightly depressed to ensure automatic gear changes at a lower engine speed.

Accelerating and overtaking

Depress the accelerator pedal firmly and fully.

This will enable you to change down to the optimum gear within the engine range.

AUTOMATIC TRANSMISSION (2/4)

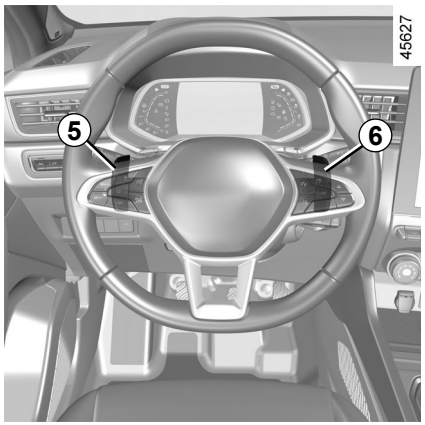

Gear changing paddles *5* and *6*

Depending on the vehicle, you can use paddles ***5*** and ***6*** to change gear when the lever is in position **D**.

5: change to a lower gear.
6: change to a higher gear.

P, **N** and **R** are not accessible using the paddles.

Driving in manual mode

When driving in position **D** you can switch to manual driving mode using paddles ***5*** and ***6*** on the steering wheel. Depending on the vehicle, two manual driving modes are available:

– **the "temporary" manual mode** can be used to force gear shifting by briefly pressing one of the two paddles. the driving mode **D** and the gear engaged appear on the instrument panel.

Note: the gearbox returns to automatic mode **D** automatically if the gear engaged is not optimal or if the paddles have not been used for a certain length of time.

– **permanent manual mode is activated** by pressing and holding either of the paddles. Driving mode **M** and the gear engaged will appear on the ***7*** display on the instrument panel.



Note: return to automatic mode by pressing and holding the right-hand paddle. Automatic mode **D** is displayed on the instrument panel.

In all situations:
– to move down through the gears, press the left-hand paddle;
– to move up through the gears, press the right-hand paddle.

Note: depending on the display, the **+** and **-** or  and  indicators will suggest moving up or down a gear.

AUTOMATIC TRANSMISSION (3/4)

Special cases

In certain driving conditions (resulting in, for example, engine protection, operation of the Electronic Stability Control programme: **ESC** etc.) the automated system may change the gear automatically.

Likewise, to prevent incorrect manoeuvres, a gear change may be refused by the automatic system: in this case the gear display flashes for a few seconds as a warning.

When facing uphill, to remain stopped, do not keep your foot on the accelerator.

Risk of overheating the automatic gearbox.

Special circumstances

– **If the road type or weather conditions** (steep uphill slopes, sudden downhill slopes, deep snow, sand or mud) make it difficult to stay in automatic mode, depending on the vehicle, it is advisable to switch to manual mode using the paddles. This will prevent the automatic gearbox from changing gears repeatedly when climbing, and permit engine braking on long descents.

– **In cold weather**, to prevent the engine from stalling, wait a few seconds before moving the selector lever from position **P** or **N** and engaging it in **D** or **R**.



For safety reasons, do not switch off the ignition before the vehicle has come to a complete standstill.

Parking the vehicle

When the vehicle is stopped, move the lever to position **P** while keeping your foot on the brake pedal: the gearbox is in neutral and the drive wheels are mechanically locked by the driveshaft.

Ensure that the electronic parking brake is engaged.

P position must only be engaged when the vehicle is stationary.



An impact to the underside of the vehicle while manoeuvring (e.g.: striking a post, raised kerb or other street furniture) may result in damage to the vehicle (e.g.: deformation of an axle).

To avoid any risk of accident, have your vehicle checked by an approved Dealer.

AUTOMATIC TRANSMISSION (4/4)

Maintenance period

Refer to the maintenance document for your vehicle or consult an Approved Dealer to check whether the automatic gearbox requires scheduled maintenance.
If it does not need to be serviced, there is no need to top up the oil.

Operating faults

– **when driving**, if the message “WARNING: Check Gearbox” appears on the instrument panel, it indicates a failure.

  Contact your approved Dealer as soon as possible;

– **when driving,** if the message “WARNING: Gearbox Overheating” appears on the instrument panel, stop as soon as possible to let the gearbox cool down and wait for the message to disappear;

– **Troubleshooting on a vehicle with an automatic gearbox** ➥ 5.36.

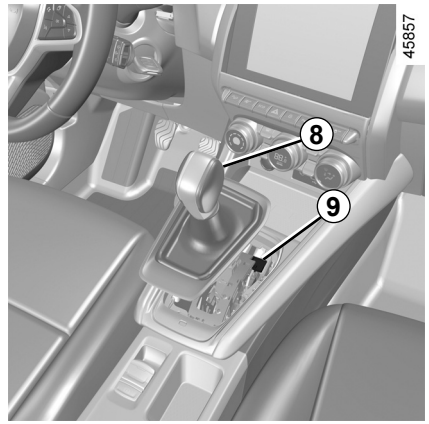

When setting off, if the lever is stuck in **P** when you press the brake pedal (e.g. battery fault), it is possible to manually release the lever to unblock the drive wheels. To do this, unclip the base of the gaiter and press the ***9*** button while simultaneously pressing the ***8*** button on the lever to unlock the lever and shift to position **N**.

Contact an authorised dealer as soon as possible.

EMERGENCY CALL (1/3)

If the vehicle is equipped, the emergency call function can be used to call the emergency services (without charge) automatically or manually in the event of an accident or illness, reducing the time it takes for the emergency services to arrive.

Note: the emergency call operates:

– in countries covered by the associated telephone emergency services and infrastructure compatible with the system;

– depending on the network coverage in the geographical region where the vehicle is being driven.

If you use the emergency call function to report an accident which you have witnessed, this implies stopping where traffic conditions allow in order for the emergency services to locate your vehicle and therefore the location of the reported accident.

In all cases, comply with local legislation.

Use the emergency call only in the event of an emergency you are involved in, if you witness an accident or if you feel ill.

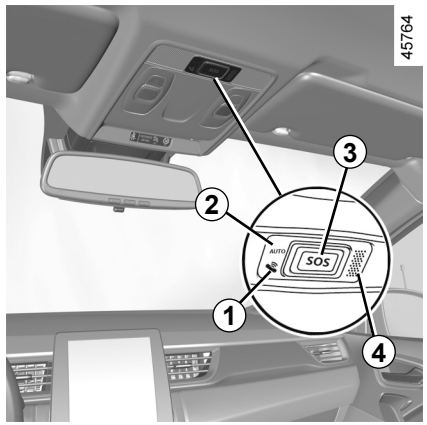

1 System operation warning light:
– green: operational (network available);
– off: non-operational (network unavailable);
– red: operating fault;
– green flashing: call in progress.

2 Automatic mode warning light.

3 **SOS** button.

4 Microphone.

5 Speaker.

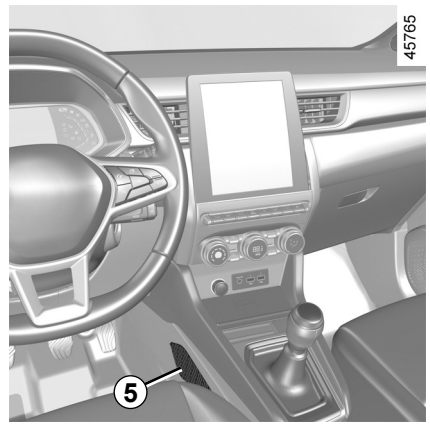

A call is always made as follows:

– the call is set up with the emergency services;

– send data related to the incident (vehicle identification plate, local time of the call, last positions, direction of the vehicle) ;

– voice communication with the emergency services;

– if necessary, emergency assistance is called.

Emergency call has two modes:

– automatic mode;

– Manual mode.

EMERGENCY CALL (2/3)

Automatic mode

If the automatic mode ***2*** warning light appears in green this confirms that the automatic system is activated.

The emergency call starts automatically in the event of an accident that has required the activation of the protective equipment (seat belt pretensioners, airbag etc.).

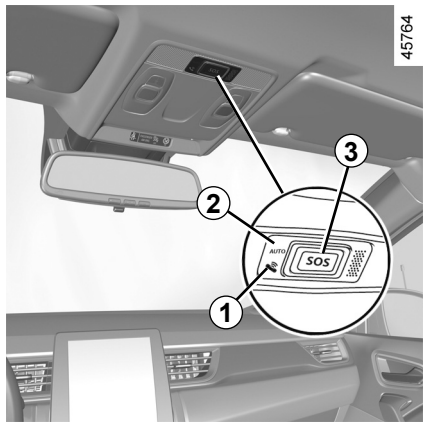

Manual mode

The emergency call is carried out by:

– pressing and holding the ***3*** button for at least three seconds;

or

– pressing the ***3*** button five times within ten seconds.

In the event of unintended operation, it is possible to cancel the call by pressing the ***3*** button for around two seconds, before the call is connected to the call centre.

Once a call is established, only the call centre can end the call.

Test mode
(depending on local laws)

Test mode is reserved exclusively for Approved Dealers to check that the emergency call feature is working properly.

To activate test mode:

– briefly press the ***3*** button three times;

– wait approximately 15 seconds;

– briefly press the ***3*** button three times.

Exit from test mode is automatic.

In the event of an accident, if the location and traffic conditions permit, stay close to the vehicle in order to be able answer the call centre quickly if necessary.

EMERGENCY CALL (3/3)

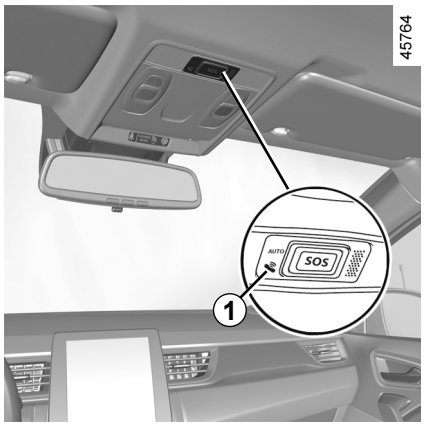

Operating faults

In some cases, the emergency call may not work (e.g. low battery).

When the system detects an operating fault, the ***1*** warning light turns red for over 30 minutes; consult an Approved Dealer as soon as possible.

The system operates with a dedicated battery. The battery service life is approximately four years (the ***1*** warning light lights up in red to warn you when approaching expiry).

Consult an approved dealer.

To guarantee your safety and the proper operation of the system, any operation carried out on the battery (removal, disconnection, etc.) must be carried out by a qualified specialist.

Risk of serious burns or electric shocks.

You must respect the replacement intervals (without exceeding them) as stated in the maintenance document.

The battery is a specific type. Please ensure it is replaced with the same type.

Call an approved Dealer.

Without the emergency call feature, the system is not trackable and will not be under constant surveillance. Data is automatically and constantly erased, and the system stores only the last three positions of the vehicle.

According to local legislation, data is only sent in the event of an emergency call. Data sent to the call centre is treated according to the personal data protection laws applicable in the country where you are located. The system stores activity history data for 13 hours only.

The vehicle owner has the right of access to their data. They can request that the data be corrected, deleted or locked.

Section 3: Your Comfort

MULTI-SENSE. 3.2
Air Vents 3.3
Manual air conditioning, heating system 3.5
Automatic climate control 3.11
Air conditioning: information and advice on use 3.15
Multimedia equipment 3.17
Electric windows 3.19
Electric sunroof 3.21
Sun visor 3.24
Interior lighting. 3.25
Passenger compartment storage, fittings 3.28
Accessories socket 3.32
Rear headrests 3.33
Rear bench seat: functions 3.34
Luggage compartment. 3.36
Rear parcel shelf 3.37
Luggage compartment storage 3.38
Transporting objects in the luggage compartment 3.39
Transporting objects: towbar 3.40
Roof bars, Spoiler 3.41

MULTI-SENSE

The MULTI-SENSE system enables a choice between three driving modes that can be used to control, depending on the vehicle: driving, ambient lighting, comfort and engine sound:
– the Eco and Sport modes are pre-configured and can be partially customised (ambient lighting, etc.);
– the My Sense mode is customisable.

The drive modes affect the:
– power-assisted steering;
– Electronic Stability Program;
– the response of the engine and gearbox.

They also affect the:
– the lighting in the passenger compartment and of the instrument panel;
– the information on the instrument panel and multimedia screen;
– depending on the vehicle, the engine sound.

Engine settings are specific to each of the driving modes and cannot be customised.

Mode Eco

Eco mode focuses on energy saving. The steering is smooth, engine and gearbox management enable fuel consumption to be reduced ➥ 2.22.

Sport mode

This mode enables an increased responsiveness from the engine and the gearbox. The steering is firmer.

My Sense mode

Using standard default vehicle settings, this mode can be used to manually configure driving, ambient lighting, comfort and engine sound (depending on the vehicle).

After the engine is switched off, the vehicle will always restart in My Sense mode.

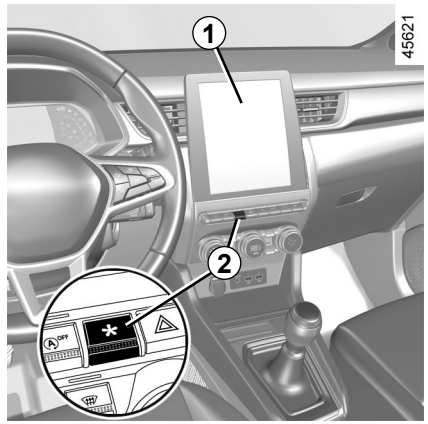

Accessing the menu

You can access MULTI-SENSE, depending on the vehicle:
– from the multimedia screen ***1***;
– using the ***2*** switch.

Please refer to the multimedia instructions for further information.

In any mode, you can change the colour of the ambient lighting as well as the format of the information displayed on the instrument panel and multimedia screen.
You can also reset to the default settings.

AIR VENTS, air outlets (1/2)

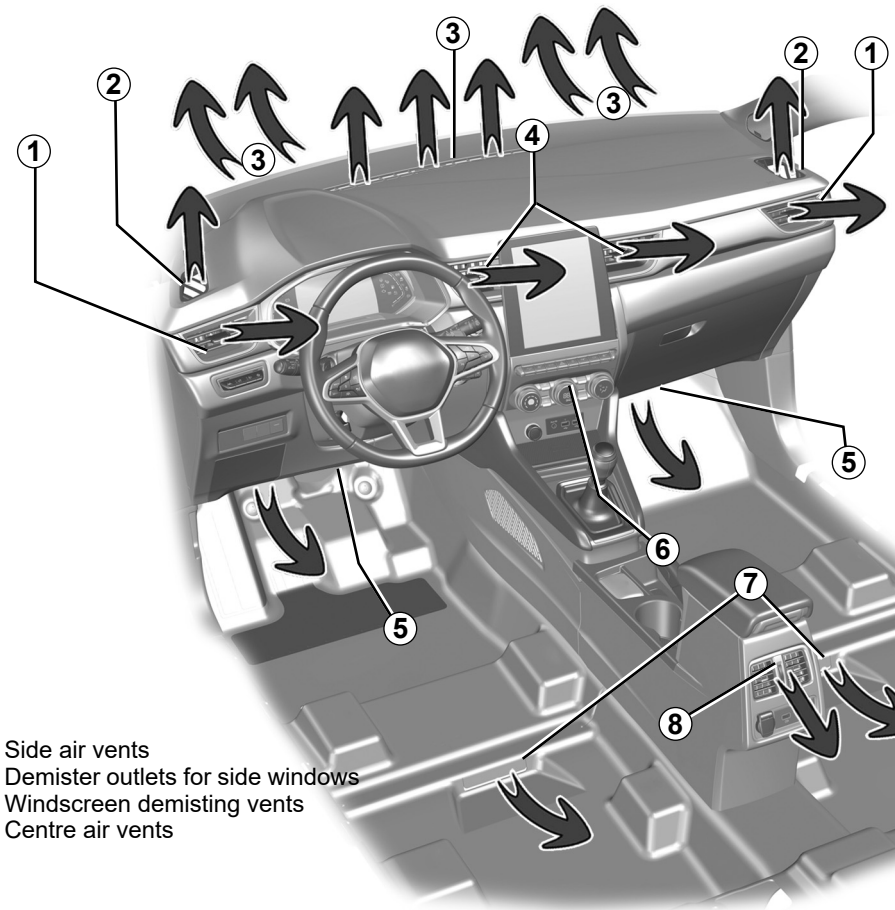

46753

1 Side air vents
2 Demister outlets for side windows
3 Windscreen demisting vents
4 Centre air vents
5 Footwell heater outlets for front passengers
6 Control panel
7 Footwell heater outlets for rear passengers (depending on the vehicle)
8 Rear console air vents

OVSE23E2

AIR VENTS, air outlets (2/2)

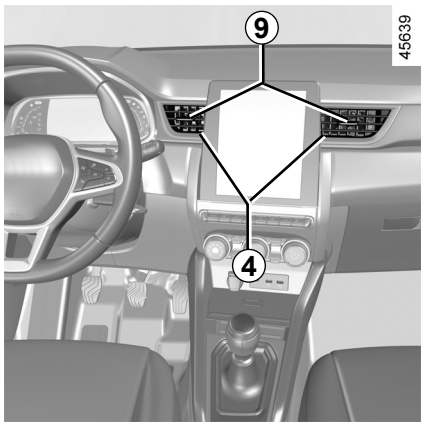

Central *4*, side *1* and rear air vents *8*

Air flow

To close: move the cursor ***9*** towards the outside of the vehicle beyond the resistance point.

To open: move the cursor ***9*** towards the inside of the vehicle.

Direction

Move the cursor ***9*** to the desired position.

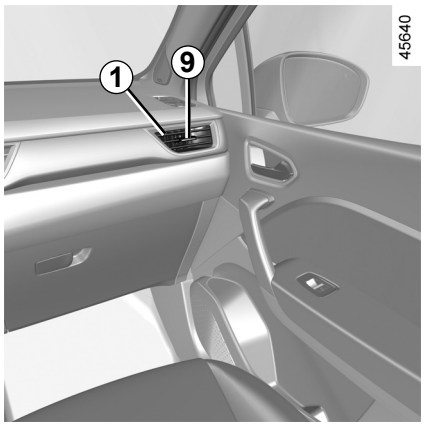

Do not attach any objects to the air vents (e.g. telephone mounting).

Risk of damage.

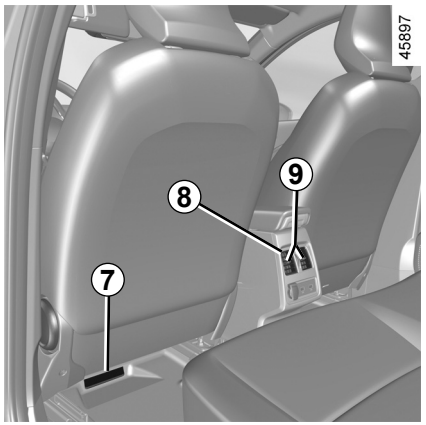

Rear seats

(depending on vehicle)

Passenger footwell heater outlets ***8***.

Do not add anything to the vehicle's ventilation circuit (for example, to remove bad odours).

There is a risk of damage or of fire.

MANUAL AIR CONDITIONING, HEATING SYSTEM (1/6)

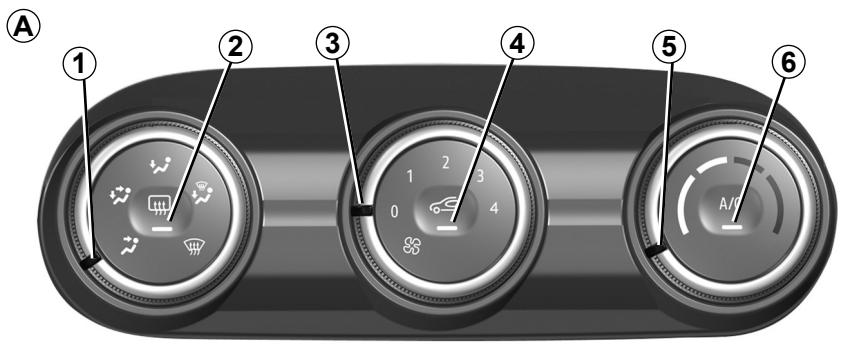

The A controls

(depending on vehicle)

1 Distribution of air in the passenger compartment.

2 De-icing/demisting of the rear screen and, depending on the vehicle, the rear view mirrors.

3 Adjusting the ventilation fan speed.

4 Air recirculation.

5 Adjusting the air temperature.

6 Air conditioning.

Distribution of air in the passenger compartment

There are five air distribution options. Turn control ***1*** to choose the distribution option.

The air flow is directed to the windscreen and the front side window demisting vents.

The air flow is distributed between front side window demisting vents, the windscreen demisting vents and the footwells.

The air flow is directed mainly towards the footwells.

The air flow is directed towards the dashboard air vents, the front footwells and, depending on the vehicle, the second row footwells.

The air flow is mainly directed to the dashboard air vents.

MANUAL AIR CONDITIONING, HEATING SYSTEM (2/6)

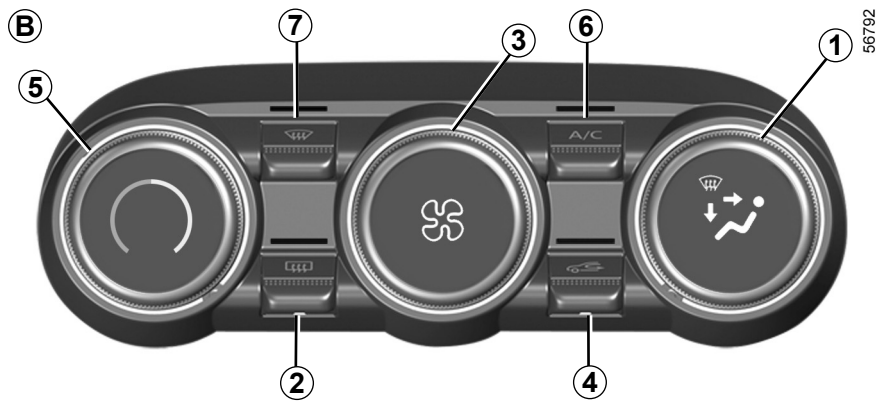

Controls *B*

(depending on the vehicle)

1 Distribution of air in the passenger compartment.

2 De-icing/demisting of the rear screen and, depending on the vehicle, the rear view mirrors.

3 Adjusting the ventilation fan speed.

4 Air recirculation.

5 Adjusting the air temperature.

6 Air conditioning control.

7 “Clear View” function.

Switching air conditioning on or off

Activation is not possible if the ***3*** control is set to “**0**” (control ***A***) or “**OFF**” (control ***B***).

Press the ***6*** button to deactivate the air conditioning. The button’s warning light will go out.

The air conditioning system is used for:

– lowering the temperature inside the passenger compartment;

– eliminating condensation more quickly.

MANUAL AIR CONDITIONING, HEATING SYSTEM (3/6)

Air recirculation (isolation of the passenger compartment)

Air recirculation is for:

– isolating the vehicle from the external atmosphere (driving in polluted areas, etc.);

– to cool the passenger compartment temperature more quickly when air conditioning is activated.

This function is managed automatically but you can also activate it manually. In this case, the operation is confirmed by the button's warning light ***4***.

Manual use

Press button ***4***, the button's warning light comes on.

Prolonged use of this position may lead to odours, caused by non-renewal of air, and the formation of condensation on the windows. To avoid this, air recirculation is disabled automatically after a certain time.

Stopping the system

Turn the ***3*** control to "**OFF**" or "**0**" to switch off the system or press the ***4*** button. To start it, turn the ***3*** control to adjust the fan speed.

Clear View function

Press the ***7*** button: the integrated indicator light comes on.

This function quickly demists and de-ices the windscreen, the rear screen, the front side windows, and the door mirrors (depending on the vehicle). It automatically activates the air conditioning and rear screen de-icing functions.

Press button ***2*** to stop the heated rear screen operating, and the integrated indicator goes out.

To exit this function, press button ***7*** or ***5***.

Using the demisting/de-icing function will disable the air recirculation.

Switching air conditioning on or off

In automatic mode, the system switches the air conditioning system on or off, depending on the climate conditions.

Activation is not possible if the ***3*** control is set to "**0**" (control ***A***) or "**OFF**" (control ***B***).

Press the ***6*** button to deactivate the air conditioning. The button's warning light will go out.

The air conditioning system is used for:

– lowering the temperature inside the passenger compartment;

– eliminating condensation more quickly.

Fuel consumption increases when the air conditioning is being used (switch it off when it is not required).

OVSE23E2

MANUAL AIR CONDITIONING, HEATING SYSTEM (4/6)

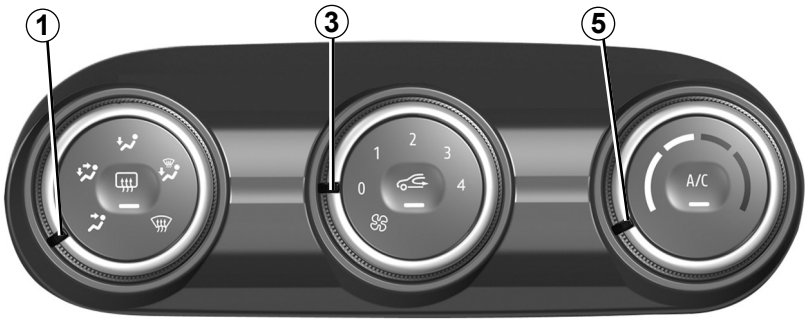

45900

Switching the air recirculation on

Press button ***4***: the button's warning light comes on. Under these conditions, air is taken from the passenger compartment and is recirculated, with no air being taken from outside the vehicle.

Air recirculation is for:

– isolating the vehicle from the external atmosphere (driving in polluted areas, etc.);

– to cool the passenger compartment temperature more quickly when air conditioning is activated.

If the air conditioning is not activated ("**A/C**" warning light on the ***6*** button goes off), prolonged use of recirculated air may cause mist to form on the side windows and windscreen as well as other problems due to the presence of non-recirculated air in the passenger compartment. To avoid this, air recirculation is disabled automatically after a certain time.

OVSE23E2

MANUAL AIR CONDITIONING, HEATING SYSTEM (5/6)

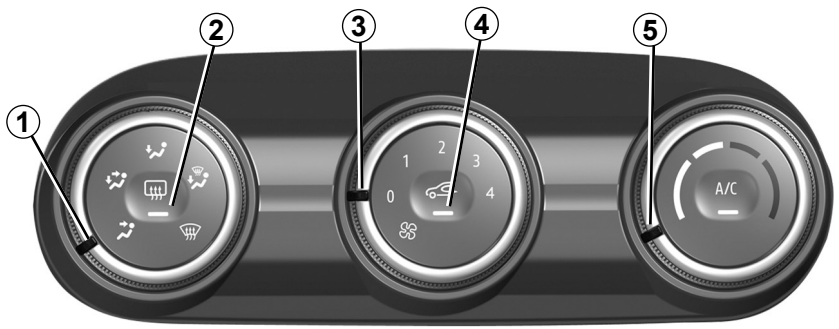

45900

Adjusting the air temperature

Turn control ***5*** to obtain the desired temperature. The further towards the red the slide is, the higher the temperature will be.

When the air conditioning system is used for long periods, it may begin to feel cold. To increase the temperature, turn control ***5*** to the right.

Adjusting the ventilation speed

Move the ***3*** control to adjust the amount of air blown. If you want to shut off the flow of air, set the ***3*** control to "**0**" (control ***A***) or "**OFF**" (control ***B***).

The system is deactivated: the ventilation speed is zero (vehicle stationary). You can, however, still feel a slight flow of air when the vehicle is moving.

Using  position on the ***1*** control will disable the air recirculation function in order to prevent misting of the windscreen.

OVSE23E2

MANUAL AIR CONDITIONING, HEATING SYSTEM (6/6)

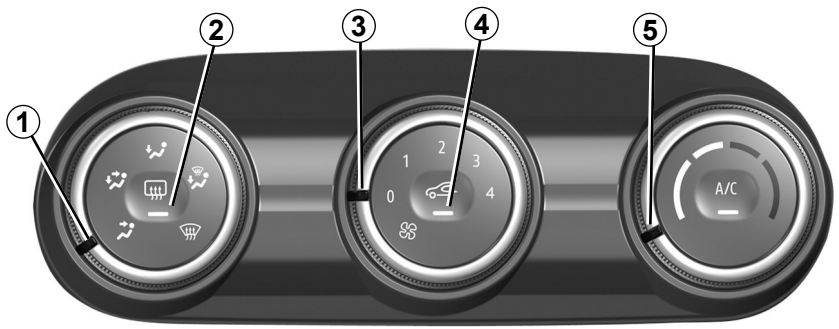

Rear screen de-icing/ demisting

With the engine running, press button ***2***. The operating tell-tale comes on.

This function permits rapid demisting/ de-icing of the rear screen and de-icing of the door mirrors (on equipped vehicles).

To exit this function, press button ***2*** again. Warning light goes out.

Demisting automatically stops.

Rapid demisting

Turn controls ***1***, ***3*** and ***5*** to:

– demisting ;
– the fan speed in position **3** or **4**;
– maximum temperature.

Press the ***4*** button to deactivate the air recirculation (warning light off).

AUTOMATIC CLIMATE CONTROL (1/4)

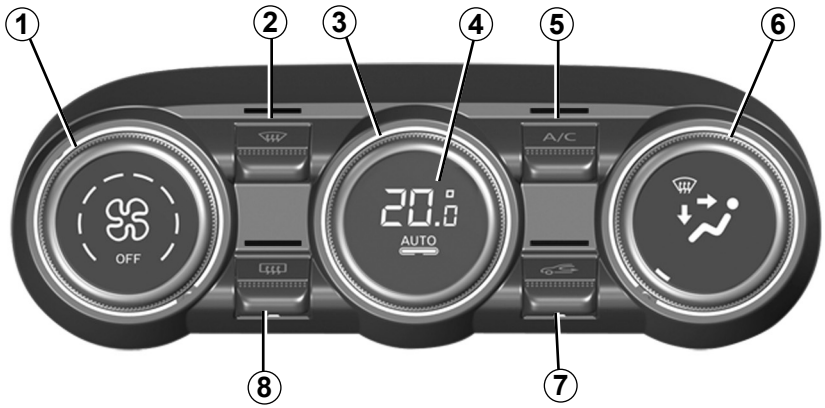

The controls

(depending on the vehicle)

1 Adjusting the ventilation fan speed.

2 “Clear View” function.

3 Adjusting the air temperature.

4 Automatic mode.

5 Air conditioning control.

6 Distribution of air in the passenger compartment.

7 Air recirculation.

8 De-icing/demisting of the rear screen and, depending on the vehicle, the rear view mirrors.

Automatic mode

The automatic climate control system guarantees comfort in the passenger compartment and good visibility (except in the event of extreme conditions), while optimising consumption. The system controls the ventilation speed, air distribution, air recirculation, and starting and stopping the air conditioning and air temperature.

AUTO: allows the selected comfort level to be best attained, depending on the exterior conditions. Press button ***4***.

Adjusting the ventilation speed.

In automatic mode, the system uses the most suitable amount of air to reach and maintain the desired comfort level.

You can still adjust the ventilation speed by turning control ***1*** to increase or reduce the ventilation speed.

Adjusting the air temperature

Turn control ***3*** to obtain the desired temperature.

Turning the control to the right increases the temperature.

Any action on a button other than button **AUTO** triggers deactivation of automatic mode.

OVSE23E2

AUTOMATIC CLIMATE CONTROL (2/4)

Clear View function

Press the ***2*** button: the integrated indicator light comes on.

This function quickly demists and deices the windscreen, the rear screen, the front side windows, and the door mirrors (depending on the vehicle). It automatically activates the air conditioning and rear screen de-icing functions.

Press button ***8*** to stop the heated rear screen operating, and the integrated indicator goes out.

To exit this function, press button ***2*** or ***4***.

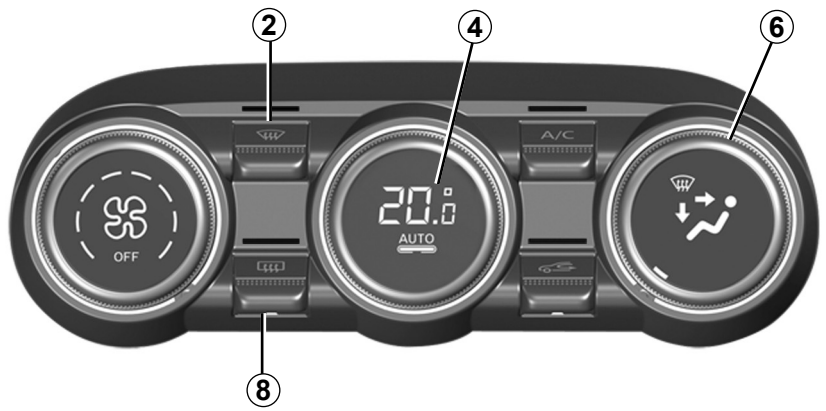

Adjusting the distribution of air in the passenger compartment

Turn control ***6***. The integrated warning light in the button comes on.

All the air is then directed to the windscreen and front side window demisting vents.

The air flow is distributed between front side window demisting vents, the windscreen demisting vents and the footwells.

The air flow is directed towards the dashboard air vents, the front footwells and, depending on the vehicle, the second row footwells.

The air flow is mainly directed to the dashboard air vents.

The air flow is directed mainly towards the footwells.

AUTOMATIC CLIMATE CONTROL (3/4)

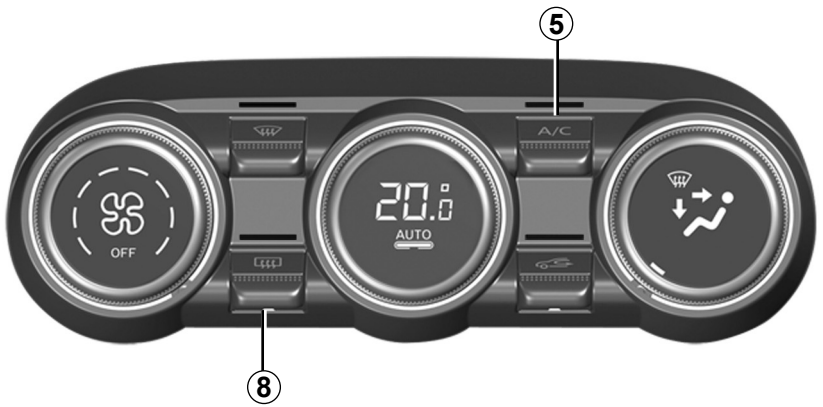

Rear screen de-icing/ demisting

Press the ***8*** button: the integrated indicator light comes on. This function enables rapid demisting or de-icing of the rear screen and de-icing of the rear view mirrors (on equipped vehicles).

To exit this function, press button ***8*** again. Demisting automatically stops.

Switching air conditioning on or off

In automatic mode, the system switches the air conditioning system on or off, depending on the climate conditions.

Press the ***5*** button to deactivate the air conditioning. The integrated indicator light goes off.

AUTOMATIC CLIMATE CONTROL (4/4)

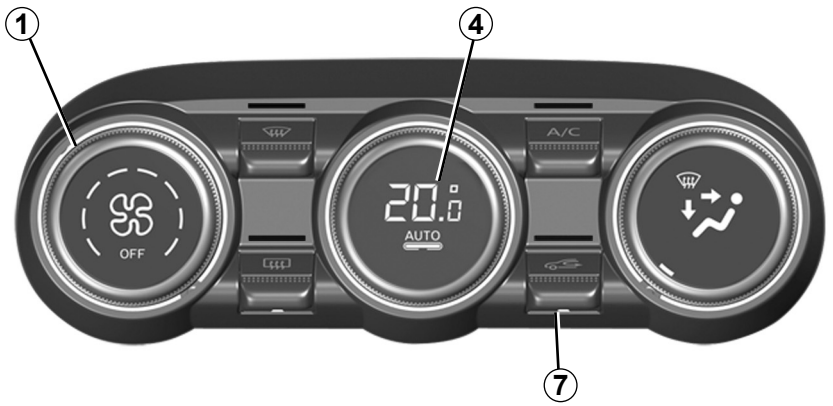

44945

Air recirculation (isolation of the passenger compartment)

This function is managed automatically but you can also activate it manually. In this case, the operation is confirmed by a warning light on the button ***7***.

Using the demisting/de-icing function will disable the air recirculation.

Manual use

Press the ***7*** button: the integrated indicator light comes on.

Prolonged use of this position may lead to odours, caused by non-renewal of air, and the formation of condensation on the windows.

To avoid this, air recirculation is disabled automatically after a certain time.

Stopping the system

Turn the control ***1*** to "**OFF**" to stop the system. To start it, turn the control ***1*** again, then adjust the fan speed or press the button ***4***.

Fuel consumption increases when the air conditioning is being used (switch it off when it is not required).

AIR CONDITIONING: information and operating instructions (1/2)

Advice on use

In some situations (air conditioning off, air recirculation activated, ventilation speed at zero or low etc.), you may notice that condensation starts to form on the windows and windscreen.

If there is condensation, use the **"Clear View"** function to remove it, then use the air conditioning in automatic mode to stop it forming again.

Do not add anything to the vehicle's ventilation circuit (for example, to remove bad odours).

There is a risk of damage or of fire.

Fuel consumption

You will normally notice an increase in fuel consumption (especially in town) when the air conditioning is operating.

For vehicles fitted with air conditioning with no automatic mode, switch off the system when it is not required.

Advice for reducing consumption and helping to preserve the environment

Drive with the air vents open and the windows closed. If the vehicle has been parked in the sun, open the doors for a few moments to let the hot air escape before starting the engine.

Maintenance

Refer to the Maintenance Document for your vehicle for the inspection frequency.

Use the air conditioning system regularly, even in cold weather, running it at least once a month for approximately 5 minutes.

Operating faults

As a general rule, contact your approved dealer in the event of an operating fault.

– **Reduction in de-icing, demisting or air conditioning performance.** This may be caused by the passenger compartment filter cartridge becoming clogged.

– **No cold air is being produced**. Check that the controls are set correctly and that the fuses are sound. Otherwise, switch off the system.

Presence of water under the vehicle

After prolonged use of the air conditioning system, it is normal for water to be present under the vehicle. This is caused by condensation.

Do not open the refrigerant fluid circuit. The fluid may damage eyes or skin.

OVSE23E2

AIR CONDITIONING: information and operating instructions (2/2)

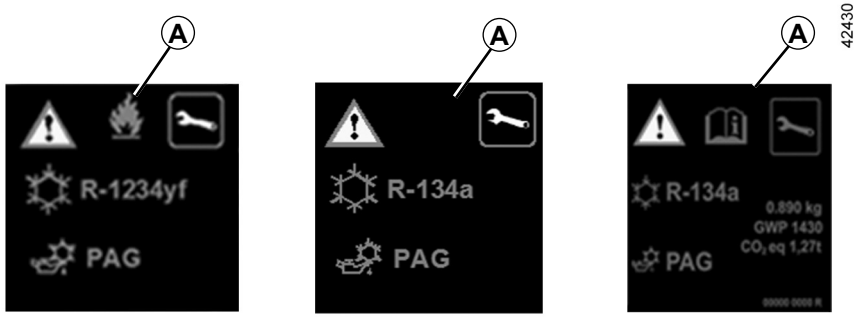

The refrigerant fluid circuit (of which some components are hermetically sealed) may contain fluorinated greenhouse gases.

Depending on the vehicle, you will find the following information on label ***A*** affixed inside the engine compartment.

The presence and location of the information on label ***A*** depends on the vehicle.

Do not open the refrigerant circuit. The fluid may damage eyes or skin.

Before carrying out any action in the engine compartment, you must switch off the ignition. ➥ 2.4 or ➥ 2.5.

Type of refrigerant fluid

Type of oil in the air conditioning circuit

Inflammable product

Consult the driver's handbook

Maintenance

x.xxx kg	Quantity of refrigerant fluid present in the vehicle.
GWP xxxxx	Global Warming Potential (CO2 equivalent).
CO2 eq x.xx t	Quantity in weight and in CO2 equivalent.

OVSE23E2

MULTIMEDIA EQUIPMENT (1/2)

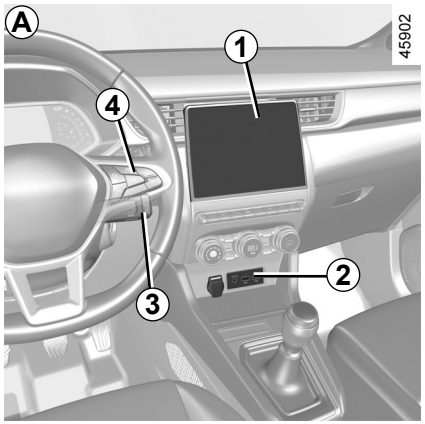

Multimedia system *A*, *B* or radio *C*

The location and operation of equipment may vary according to the vehicle.

1 Multimedia screen;
2 Multimedia sockets;
3 Steering column controls;
4 Steering wheel controls;
5 Radio.

Please refer to the multimedia instructions for further information.

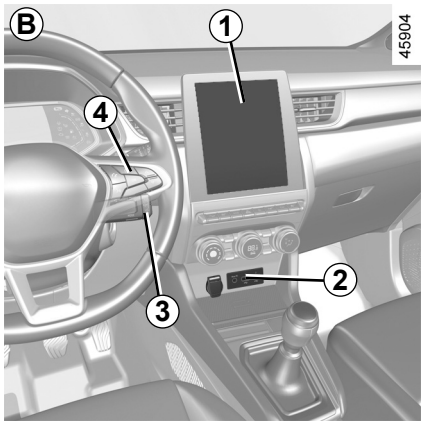

Multimedia sockets *2*

You can use the USB sockets to access the multimedia content of your accessories and to update the system.

The various sources can be selected using the multimedia screen or the radio and the steering column controls.

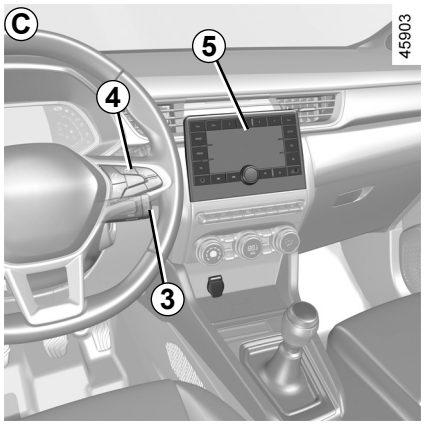

The USB ports can also be used to recharge accessories which have been approved by our Technical Department, with a maximum power rating of 12 Watts (5 Volts) per socket.

The JACK socket enables the radio to be used with an auxiliary cable.

Connect accessories with a maximum power of 12 watts only.

Fire hazard.

OVSE23E2

MULTIMEDIA EQUIPMENT (2/2)

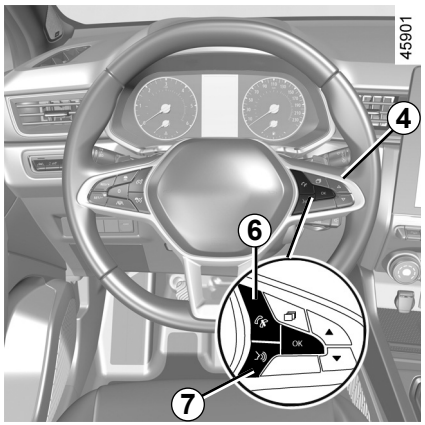

Steering column controls 4

You can use the hands-free telephone ***6*** and voice recognition ***7*** controls on vehicles fitted with these.



Microphone *8*

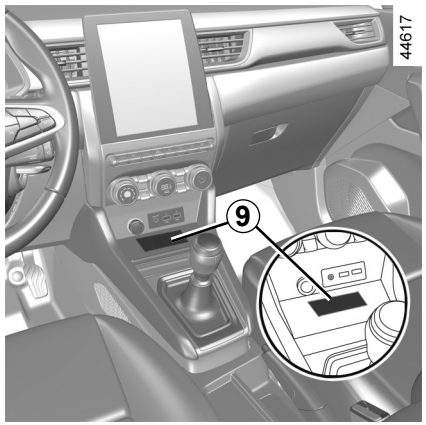

Wireless charger *9*

➥ 3.28

Using the telephone

We remind you of the need to conform to the legislation in force concerning the use of such equipment.

ELECTRIC WINDOWS (1/2)

These systems operate with the ignition on or off, until one of the front doors is opened (limited to about 3 minutes).

Driver's responsibility

Never leave your vehicle with the card or key inside, with a child, adult who is not self-sufficient or a pet in the vehicle, even for a short while.

They may pose a risk to themselves or to others by starting the engine or activating equipment (such as the gear lever or electric windows).

If any part of the body becomes trapped, reverse the direction of the window immediately by pressing the relevant switch.

Risk of serious injury.

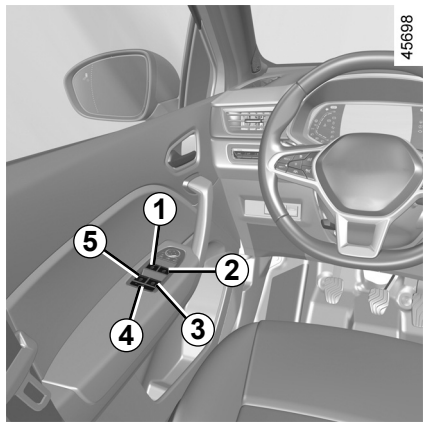

One-touch electric windows

Briefly press or pull a window switch as far as it will go: the window will be raised or lowered fully. Pressing the switch again stops the window moving.
Note: the rear windows do not open fully
From the driver's seat, use switch:
1 for the driver's side;
2 for the front passenger side;
3 and ***5*** for the rear passengers.
From the passenger seats, use switch ***6***.

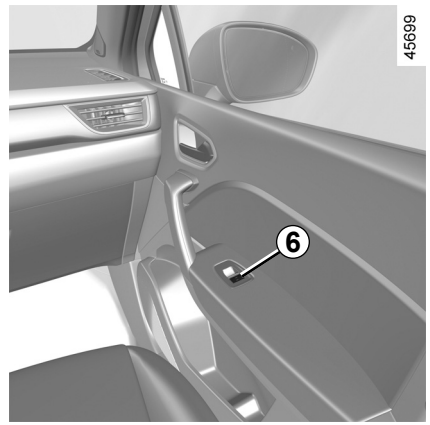

Avoid resting any objects against a half-open window: there is a risk that the electric window could be damaged.

Passenger safety

The driver can prevent the front and rear passenger electric windows from operating (and the driver's window) by pressing switch ***4***. A confirmation message is displayed on the instrument panel.

ELECTRIC WINDOWS (2/2)

One-touch electric windows (continued)

Note: if the window detects resistance when closing (e.g. tree branch etc.), it stops and then lowers again by a few centimetres.

Impossible to operate the one-touch electric window

The one-touch electric window is equipped with heat protection: if you press the switch for the window more than 16 consecutive times it goes into protection mode (locking the window).

You can:

– use the electric window switch briefly and with intervals of approximately 30 seconds;

– with the engine running, the window will be unlocked after approximately 20 minutes of inaction on the electric window switch.

Remote control window closing

When the doors are locked from the outside, if you **double-press the locking button on the driver's door** in hands-free mode**, on the card or, depending on the vehicle, on the key**, all of the windows (and sunroof depending on the vehicle) equipped with a one-touch electric window will close automatically.
It is recommended that the user only operates the system when the vehicle can be seen clearly and no one is inside.

Operating faults

In case of a fault when closing a window, the system reverts to normal mode: pull the switch concerned up as often as necessary to fully close the window (the window will close gradually), hold the switch (still on the closing side) for one second then lower and raise the window fully to reinitialise the system.

If necessary, contact an approved Dealer.

When closing the windows, ensure that no part of the body (arm, hand, etc.) is protruding from the vehicle.

Risk of serious injury.

ELECTRIC SUNROOF (1/3)

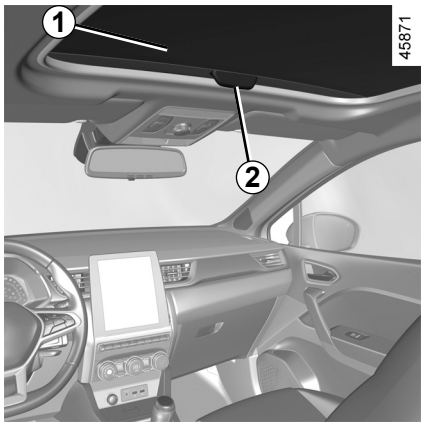

To slide the curtain *1*

– **To open:** push the handle ***2*** rearwards to move the blind to the desired position;

– **to close:** pull the handle ***2*** forwards to move the blind to the desired position.

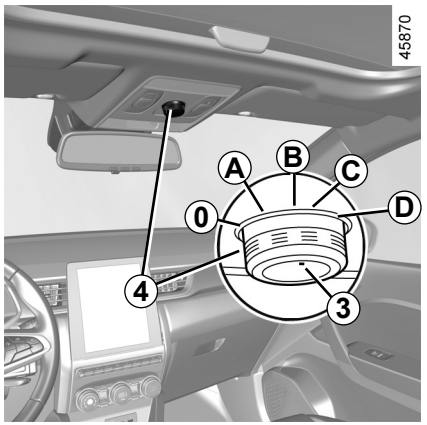

To slide the sunroof

– **To tilt:** move the marked position ***3*** to position ***A***;

– **to open:** move the marked position ***3*** to position ***B***, ***C*** or ***D***depending on the type of opening required;

– **to close:** move the marked position ***3*** to position ***0***.

Driver's responsibility

Never leave an animal, child or non-autonomous adult alone in your vehicle, even for a short time.

The reason for this is that the child may endanger himself or others by starting the engine, activating equipment such as the window winders for example, or locking the doors.

If something gets trapped, reverse the direction of travel as soon as possible by turning button ***4*** fully to the right (position ***D***).

Risk of serious injury.

If the vehicle is equipped with this function, this action will activate deadlocking. ➥ 1.5 or ➥ 1.9.

Check that there is no-one still inside the vehicle

ELECTRIC SUNROOF (2/3)

Closing the sunroof by remote control

If you **press the locking button on the card twice in quick succession,** the windows and sunroof will close automatically.

It is recommended that the user only operates the system when the vehicle can be seen clearly and no one is inside.

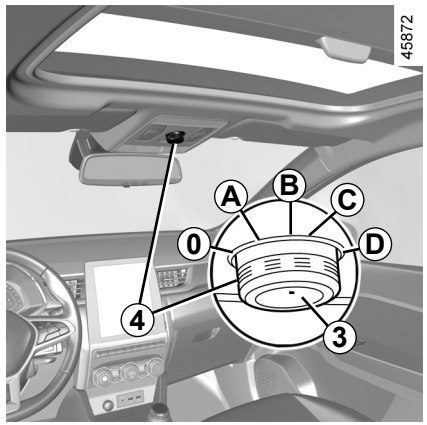

Special features

Your vehicle is fitted with an anti-pinch facility: when the sunroof encounters resistance whilst closing (branch of a tree, etc.), it stops and then moves back a few centimetres.

After closing the sunroof by remote control, pressing button ***4*** allows the sunroof to return to its previous position.

The sunroof will not open when the temperature is below -20°C. However, it will still close.

If the vehicle is equipped with this function, this action will activate deadlocking. ➥ 1.5 or ➥ 1.9.

Check that there is no-one still inside the vehicle

When closing the sunroof, ensure that no part of the body (arm, hand, etc.) is protruding from the vehicle.

Risk of serious injury.

ELECTRIC SUNROOF (3/3)

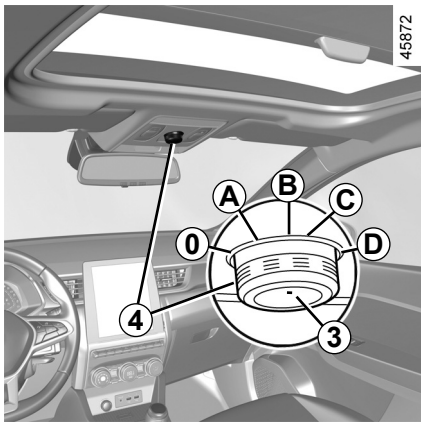

Operating faults

If the sunroof will not close, move the marked position ***3*** to position ***0*** then press button ***4*** until the sunroof is completely closed: consult an approved dealer.

Important: during this operation, the sunroof anti-pinch function is deactivated. Contact your approved Dealer as soon as possible;

Precautions during use

– **Vehicle with loaded roof bars.**

As a general rule, if there is a load on the roof, use of the sunroof is not recommended.

Before using the sunroof, check the objects and/or accessories (bike racks, roof boxes, etc.) attached to the roof bars: they should be properly arranged and secured and should not interfere with the operation of the sunroof.

Contact an approved dealer for details of possible conversions;

– **check** that the sunroof is properly closed before leaving your vehicle;

– **clean** the seal every three months using products recommended by our Technical Department;

– **do not open** the sunroof immediately after it has rained or immediately after washing the vehicle.

Driver's responsibility

Never leave an animal, child or non-autonomous adult alone in your vehicle, even for a short time.

The reason for this is that the child may endanger himself or others by starting the engine, activating equipment such as the window winders for example, or locking the doors.

If something gets trapped, reverse the direction of travel as soon as possible by turning button ***4*** fully to the right (position ***D***).

Risk of serious injury.

SUN VISOR

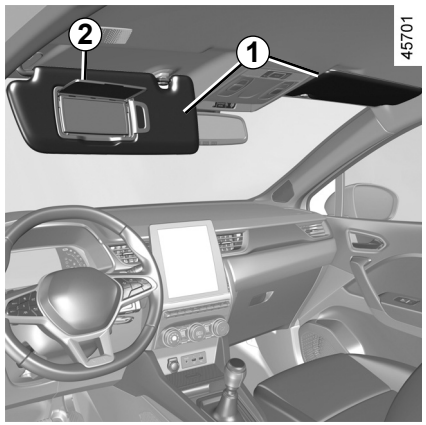

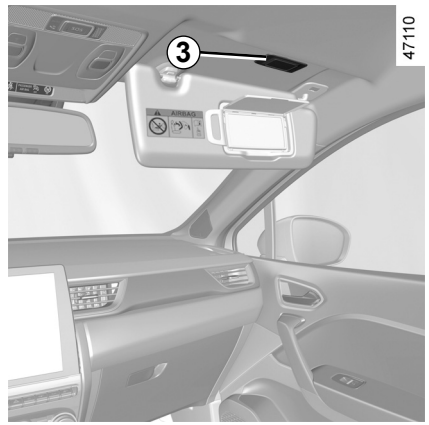

Front sun visor

Lower sun visor ***1***.

Courtesy mirrors

(depending on the vehicle)

Lift the cover ***2***. The light ***3*** switches on automatically.

When driving, ensure the courtesy mirror cover is closed.

Risk of injury.

INTERIOR LIGHTING (1/3)

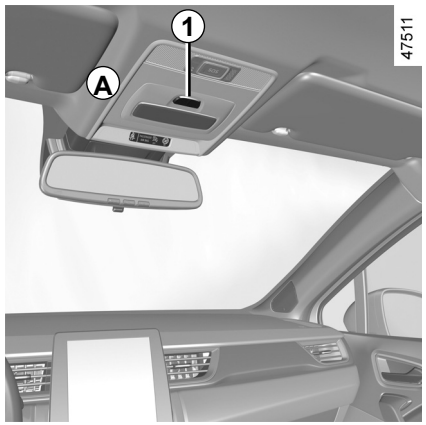

Courtesy light *A*

Press switch ***1*** for:

– permanent lighting;

– lighting controlled by the unlocking of the vehicle or by opening one of the doors. This switches off after a time delay, once the doors concerned have been closed correctly;

– lighting switches off immediately.

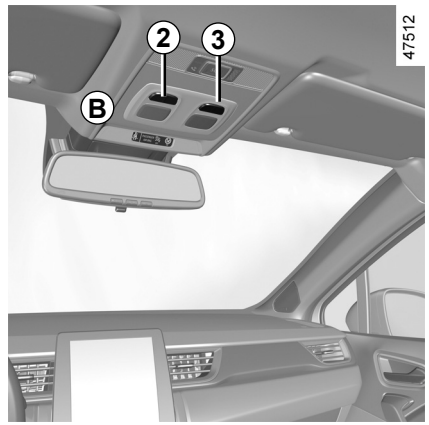

Reading lights *B* or *C*

Press the ***2*** switch for the driver, ***3*** switch for the front passenger, for permanent lighting.

Note: on vehicles fitted with a multimedia screen, you can use the multimedia screen to deactivate/activate the reading lights which switch on when the doors or luggage compartment are opened ➥ 1.80.

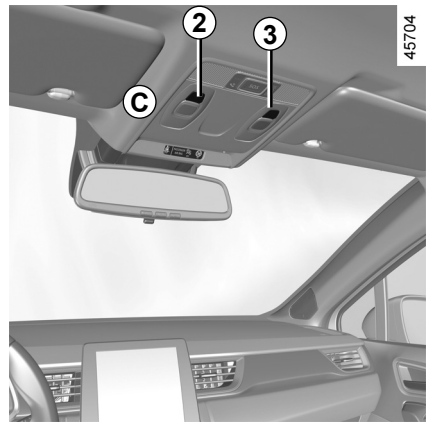

INTERIOR LIGHTING (2/3)

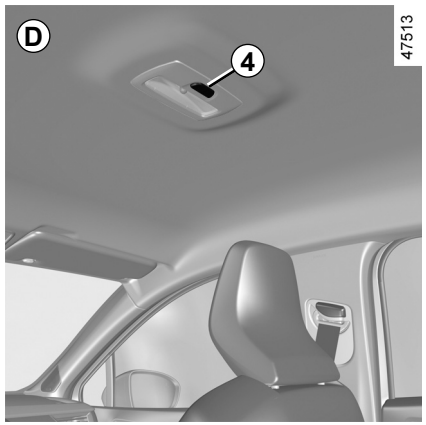

Courtesy light *D*

Press switch ***4*** for:

– permanent lighting;

– lighting controlled by the unlocking of the vehicle or by opening one of the doors. This switches off after a time delay, once the doors concerned have been closed correctly;

– lighting switches off immediately.

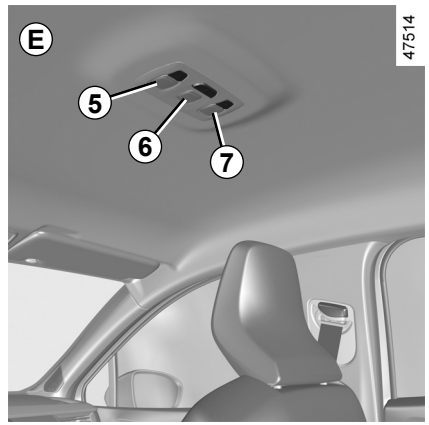

Map reading lights *E*

Press switch ***5 6*** or ***7*** for constant lighting

Note: on vehicles fitted with a multimedia screen, you can use the multimedia screen to deactivate/activate the reading lights which switch on when the doors or luggage compartment are opened ➥ 1.80.

INTERIOR LIGHTING (3/3)

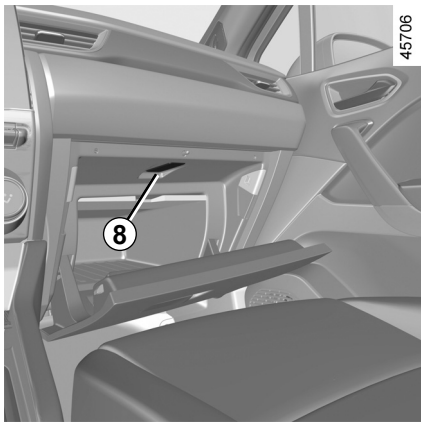

Glove box light

Depending on the vehicle, the ***8*** light switches on when the cover is opened.

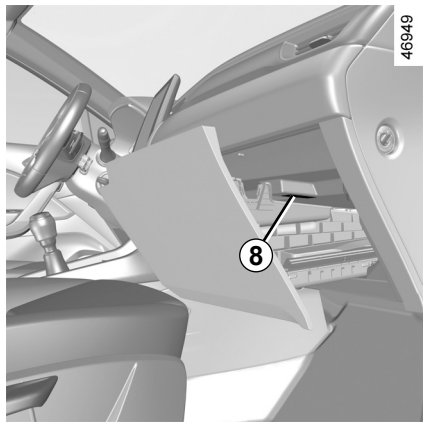

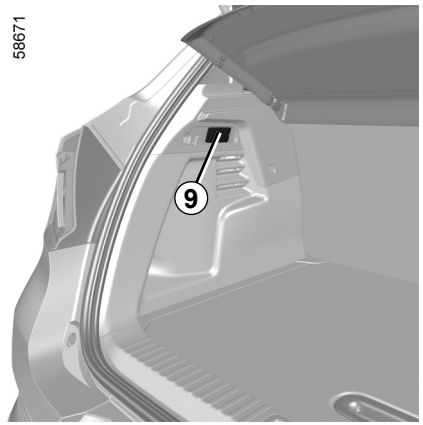

Luggage compartment light

Light ***9*** comes on when the luggage compartment is opened.

Unlocking and opening the doors or tailgate switches on the timed courtesy lights and lights.

OVSE23E2

PASSENGER COMPARTMENT STORAGE, FITTINGS (1/4)

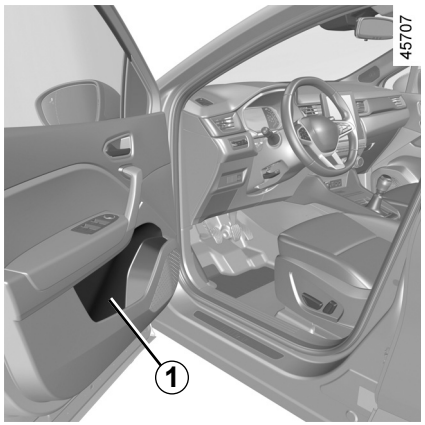

Front door storage pockets *1*

They can hold a 1.5-litre bottle.

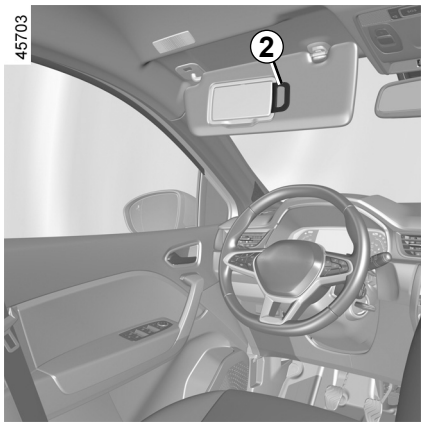

Sun blind storage compartment *2*

This can be used for storing motorway tickets, cards, etc.

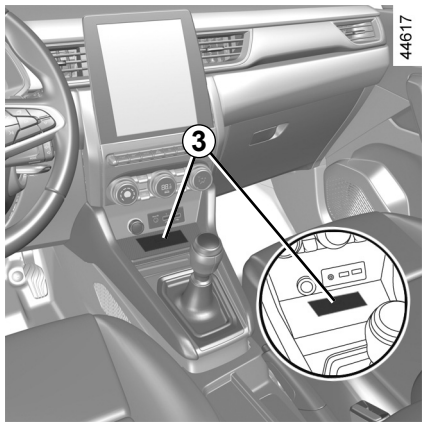

Centre console storage compartment/induction charging zone *3*

For more information on the induction charging zone, please refer to the multimedia instructions.

Nothing should be placed on the floor area in front of the driver as such objects may slide under the pedal during braking manoeuvres, thus obstructing its use.

Ensure that no hard, heavy or pointed objects are placed in the “open” storage compartments in such a way that they may fall onto passengers during sudden turning, braking or in the event of an accident.

PASSENGER COMPARTMENT STORAGE, FITTINGS (2/4)



Passenger storage compartment

Pull handle ***4*** to open it.

The glove box can hold A4-sized documents, a bottle etc.

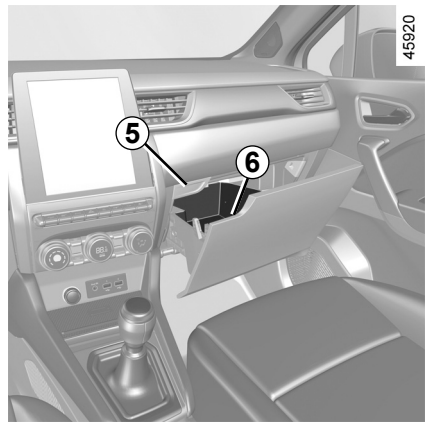

Passenger storage drawer

To open, press the button ***5*** to unlock the drawer and pull the handle ***6***.

Ensure that no hard, heavy or pointed objects are placed in the “open” storage compartments in such a way that they may fall onto passengers during sudden turning, braking or in the event of an accident.

OVSE23E2

PASSENGER COMPARTMENT STORAGE, FITTINGS (3/4)

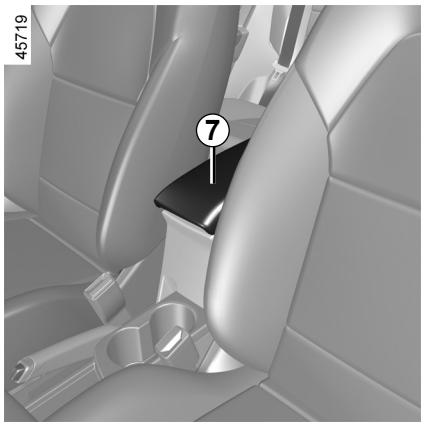

Centre armrest storage compartment *9*

Lift the cover ***7*** of the sliding armrest by pressing the ***8*** button.

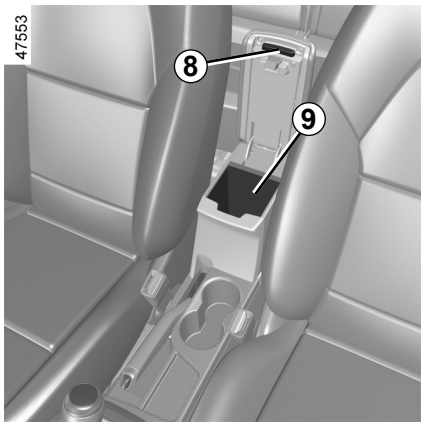

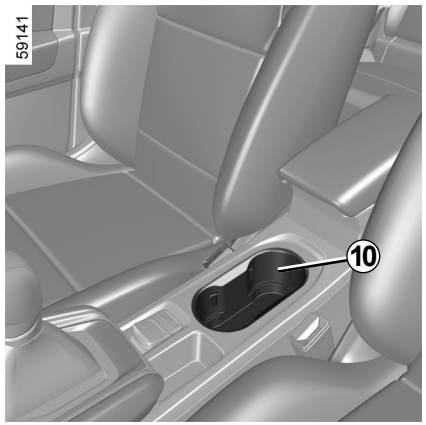

Cup holders *10*

Depending on the vehicle, the cup holder may be equipped with retaining hooks to keep the cup in place.

This can be used to store a mobile ash-tray, drink cans, etc.

When turning corners, accelerating or braking, ensure that the receptacle being held by the cup holder is not dislodged.

There is a risk of injury if hot liquid escapes.

PASSENGER COMPARTMENT STORAGE, FITTINGS (4/4)

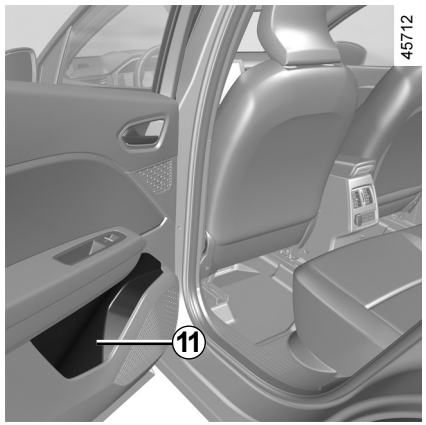

Rear door storage compartment *11*

They can hold a 0.5-litre bottle.

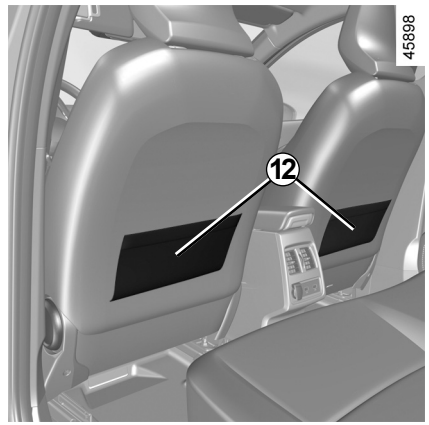

Rear seat storage pockets *12*

Ensure that no hard, heavy or pointed objects are placed in the “open” storage compartments in such a way that they may fall onto passengers during sudden turning, braking or in the event of an accident.

OVSE23E2

ACCESSORIES SOCKET

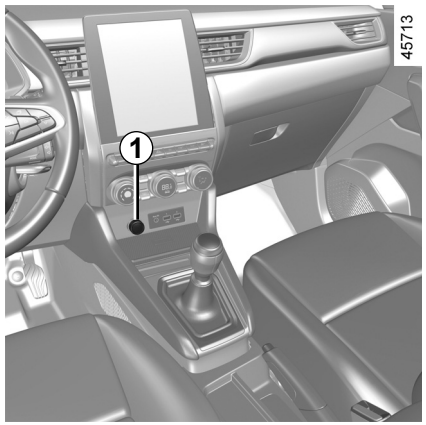

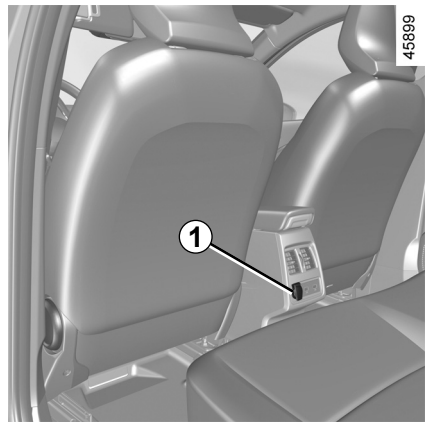

Accessories socket *1*

You can use the ***1*** socket.

It is provided for the purpose of connecting accessories approved by our Technical Department.

Only connect accessories with a maximum power of 120 watts (12 V).

When several accessory sockets are used at the same time, the total power of the connected accessories must not exceed 180 watts.

Fire hazard.

REAR HEAD RESTS

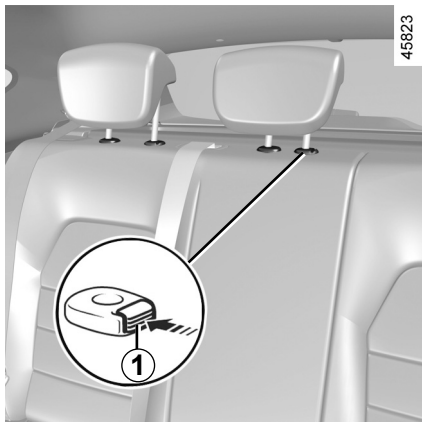

Position for use

Lift the headrest fully until it locks.

Check that the bonnet is correctly locked.

To remove the headrest

Raise the headrest as far as it will go, then press button ***1*** and remove the headrest.

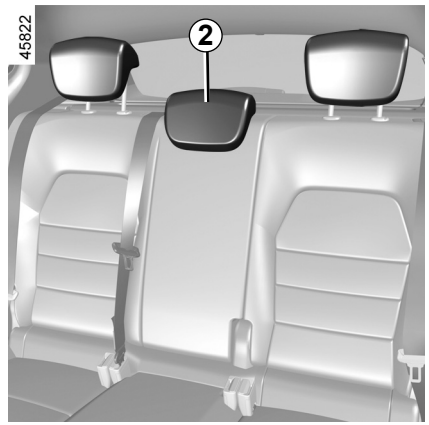

To refit the headrest

Enter the rods in their housing and push down the headrest until it locks to use it in the high position.

Check that the bonnet is correctly locked.

Storage position *2* for the headrest

Press the button ***1*** and lower the headrest completely.

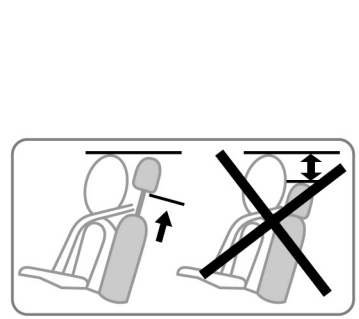

When the headrest is set at the lowest position, this is for storage only. It should not be in this position when a seat is occupied.

The headrest is a safety component; check that it is fitted and in the correct position.

REAR BENCH SEAT: functions (1/2)

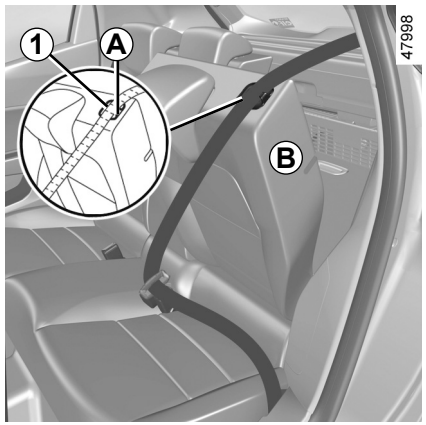

To fold down the seatback

Ensure that the front seats are far enough forward.

Before folding down a seatback:

– lower the headrest fully;

– place the seat belt in the belt guide ***A*** and buckle the seat belt. This prevents the seat belt from locking when the seatback is lifted up again.

Pull the vane ***1*** and lower the seatback ***B***.

Note: for safety reasons, the seatback ***B*** is equipped with a retaining system. You may experience resistance when handling.

To replace the seatback, proceed in the reverse order to removal.

Raise the seatback again until it reaches the locking joint of the seatback.

Be careful not to jam the safety strap between the backrest and the parcel shelf.

Check the operation of the seat belt.

Before moving the seatback, put the seat belt in belt guide ***A*** to avoid damaging it.

When refitting the seatback, make sure it is correctly locked in place.

If seat covers are fitted, make sure these do not prevent the seatback latch from locking in.

Make sure that the seat belts are positioned correctly.

Reposition the headrests.

REAR BENCH SEAT: functions (2/2)



To move forwards or backwards

Lift the lever ***2*** from the rear seats to unlock the bench seat.

Move the seat forwards or back to the required position.

Release the lever ***2*** and ensure that the bench seat is properly locked.

For safety reasons, carry out any adjustments when the vehicle is not being driven.

When moving the rear seats, ensure that nothing obstructs the anchorage points (passenger's arm or leg, a pet, gravel, cloth, toys, etc.).

OVSE23E2

BOOT

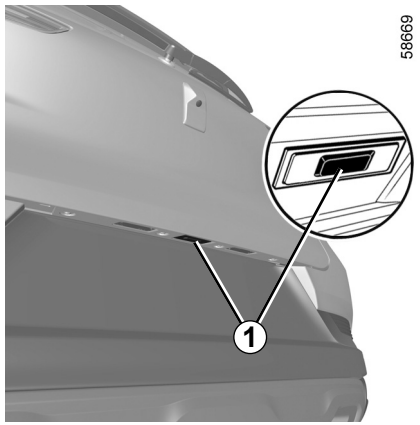

To open

Press the ***1*** button to open the luggage compartment lid a few centimetres.

Lift the luggage compartment lid.

To close

Lower the tailgate using the handles ***2*** inside the tailgate to help you.

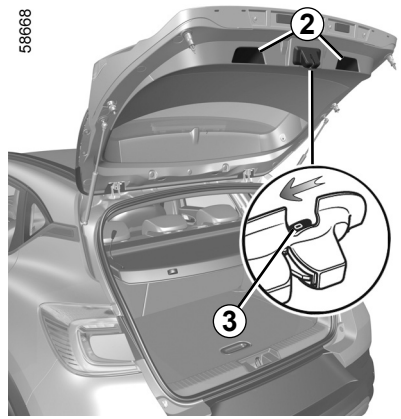

Opening the doors manually from the inside

If it is impossible to unlock the tailgate, it can be done manually from inside:

– access the luggage compartment by tilting the rear bench seatback(s),

– insert a pencil or similar object in recess ***3*** and slide the unit as shown in the illustration;

– push the tailgate to open it.

The attaching of any carrying device (bike rack, luggage box etc.) resting on the luggage compartment lid is prohibited. To install a carrying device on your vehicle, contact an Approved Dealer.

REAR PARCEL SHELF

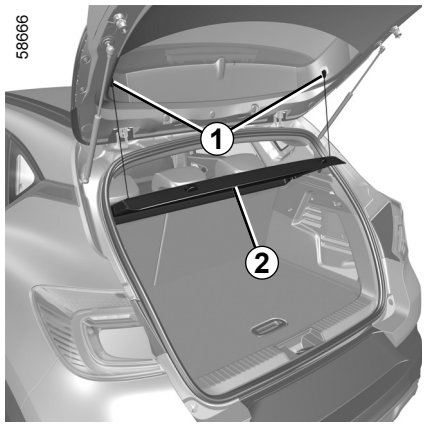

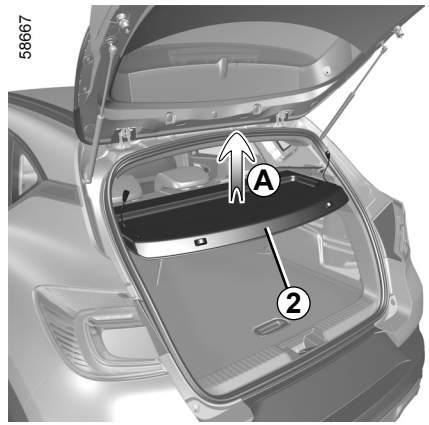

Removal

– Unhook the two straps ***1*** of the door of the boot;

– lift the shelf ***2*** to unclip it (movement ***A***);

– pull the shelf towards you.

To refit, proceed in the reverse order to removal.

Do not place any heavy or hard object on the parcel shelf. These may pose a risk to the vehicle occupants if the driver has to brake suddenly or if the vehicle is involved in an accident.

OVSE23E2

BOOT ARRANGEMENTS

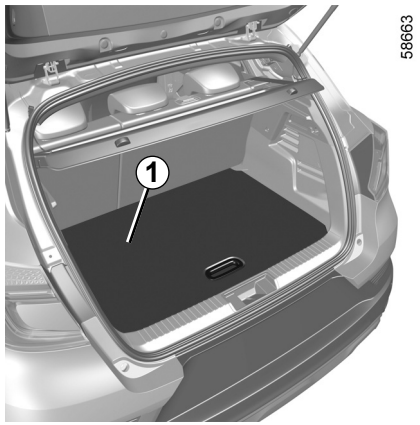

Mobile floor *1*

Flat position

Enables you to flatten the floor by folding down the back of the rear bench seat and to compartmentalise the boot into two distinct spaces.

The mobile floor is positioned on the runner ***2***.

Maximum weight for the mobile floor: 100 kg evenly distributed.

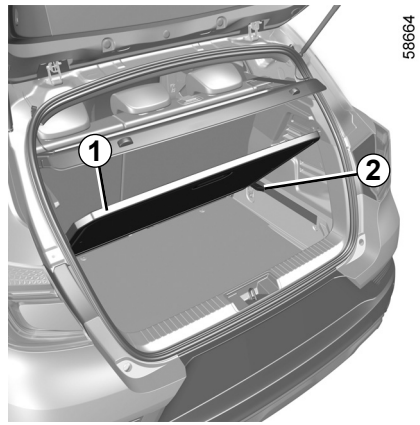

Intermediate position

In the blocked position, it allows you to access the tools stored under the boot carpet.

– Remove the mobile floor ***1***;

– position it in the luggage compartment, using the ***2*** runners provided.

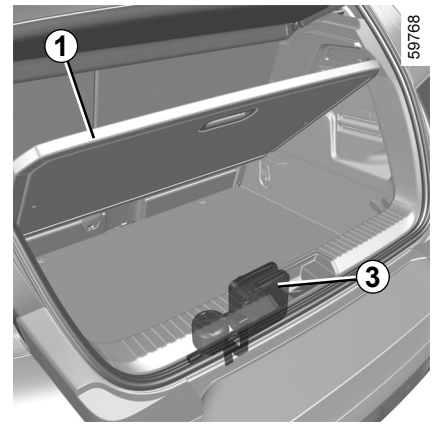

Storage position

(depending on the vehicle)

This allows for more space to store things in the boot.

– Remove the mobile floor ***1***;

– move the rear seat forwards using the lever located beside the rear seats ➥ 3.34;

– place the mobile floor ***1*** in the luggage compartment, under the runner ***2***.

If necessary, remove the inflation kit ***3*** before placing the false floor in the lower position.

TRANSPORTING OBJECTS IN THE LUGGAGE COMPARTMENT

Always position the objects transported so that the largest surface is against:

– the rear bench seatback, for normal loading (example ***A***);

– the front seatbacks with the rear seatbacks folded down, as is the case for maximum loads (example ***B***).

Ensure that the objects being transported are evenly distributed throughout the loading area.

If you have to place objects on the folded seatback, it is necessary that you lower the headrests before folding the seatback so that it can be folded as flat as possible against the seat.

Note: in the absence of an emergency spare wheel or tyre inflation kit, do not load the bottom of the luggage compartment.

58628



58629

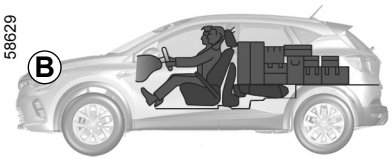

58915

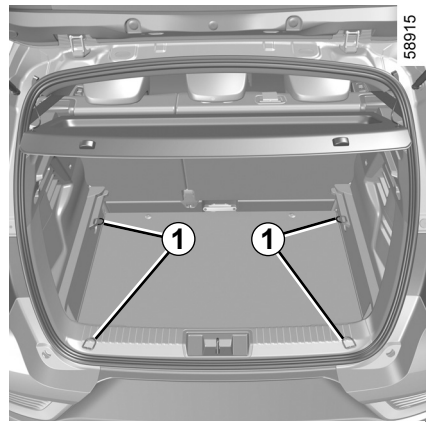

Always position the heaviest items directly on the floor.

Use the lashing points ***1*** on the boot floor, if these are fitted to the vehicle.

The luggage should be loaded in such a way that no items will be thrown forward and strike the occupants if the driver has to brake suddenly.

Fasten the rear seat belts, even if the seats are not occupied.

OVSE23E2

TRANSPORTING OBJECTS towbar

Permissible nose weight, maxi- - mum permissible towing weight braked and unbraked: ➥ 6.8.

Choice and fitting of towing equipment

Maximum weight of towing equipment:

– 10 kg on a vehicle with towing pre-equipment;

– 28 kg on a vehicle without towing pre-equipment.

It is not permitted to fit a mechanical towing device (ball, hook, etc.) that is removable without tools or retractable if it cannot be easily removed or repositioned when not in use.

For fitting and conditions of use, refer to the equipment's fitting instructions.

Please keep these instructions with the rest of the vehicle documentation.

24981

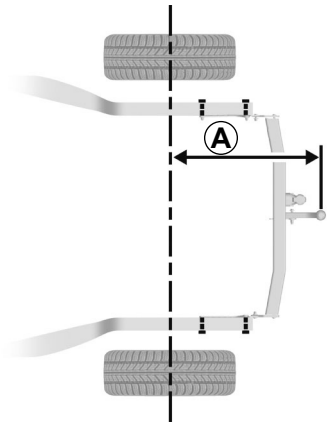

Maximum dimension ***A***: 837 mm.

24982

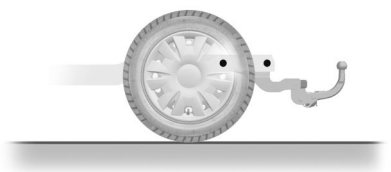

Any towing device must not obstruct any lighting component or the number plate when not in use. Mechanical towing devices (ball, hook, etc.) which can be removed without tools or which are retractable must be removed or repositioned when they are not in use.

In all cases, you must comply with the regulations of the particular country you are in.

ROOF BARS, SPOILER (1/2)

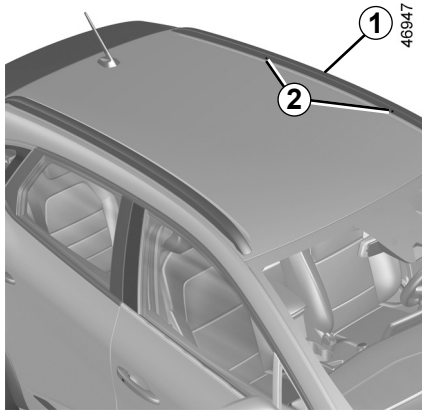

Accessing the mounting points

Vehicles fitted with longitudinal roof bars

The attachment inserts ***2*** are located on the longitudinal roof bars ***1***.

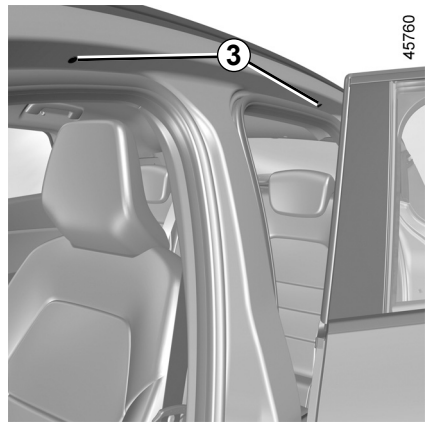

Vehicles not fitted with longitudinal roof bars

Open the doors to access the fixing points ***3***.

For information on the range of equipment adapted to your vehicle, we advise you to consult an approved Dealer.

Refer to the fitting instructions for information on how to fit roof bars and conditions of use.

Please keep these instructions with the rest of the vehicle documentation.

Maximum permissible load on roof rack ➥ 6.8.

If original roof bars, approved by our Technical Department, are supplied with screws, only use these screws for attaching the roof bars to the vehicle.

ROOF BARS, SPOILER (2/2)

Precautions during use

Handling the tailgate

Before handling the tailgate, check the objects and/or accessories (bike rack, roof box, etc.) fitted to the roof bars: these must be correctly positioned and secured, so as not to hinder the operation of the tailgate.



Spoiler *A*

It is prohibited to attach any carrying equipment (bike rack, luggage box etc.) resting against the spoiler or tailgate.

To install a carrying device on your vehicle, contact an Approved Dealer.

OVSE23E2

Section 4: Maintenance

Bonnet 4.2
Engine oil level: general information 4.4
Engine oil level: topping up, filling 4.5
Oil change 4.6
Levels 4.8
engine coolant 4.8
brake fluid 4.9
windscreen washer reservoir 4.10
Filters 4.10
Tyre pressure 4.11
Battery 4.13
Bodywork maintenance 4.16
Interior trim maintenance 4.19

BONNET (1/2)

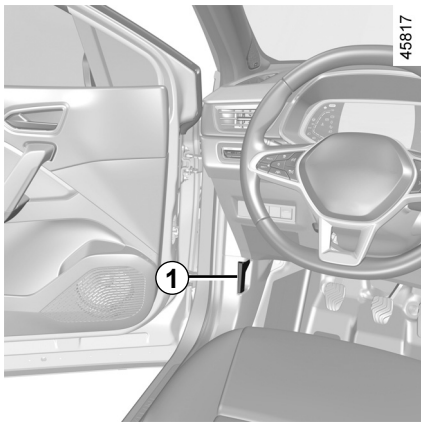

To open the bonnet, open a door and pull the ***1*** handle, located on the left-hand side of the dashboard.

Before carrying out any action in the engine compartment, you must switch off the ignition ➥ 2.4 ➥ 2.5.

Do not press down on the bonnet: there is a risk that the bonnet may accidentally close.

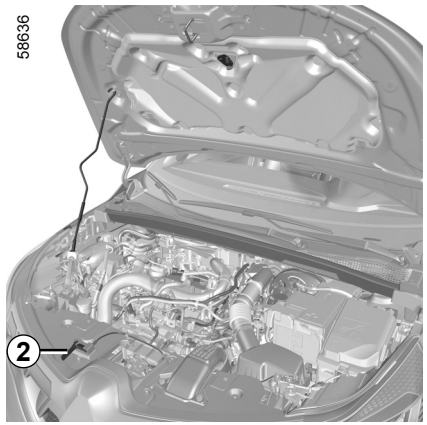

Unlocking the bonnet catch

To unlock, push tab ***2*** at the same time as opening the bonnet.

Please note when working close to the engine that it may be hot. The engine cooling fan may also start at any moment. The label in the engine compartment reminds you of this.

Risk of injury.

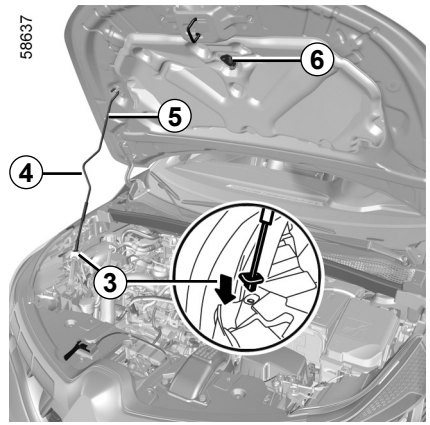

Opening the bonnet

Lift the bonnet and release stay ***5*** from its holder ***6*** using the handle ***4***. For your own safety, it is **very important** to fix the stay into the retainer ***3*** in the bonnet.

When working in the engine compartment, ensure that the windscreen wiper stalk is in the park position.

Risk of injury.

BONNET (2/2)

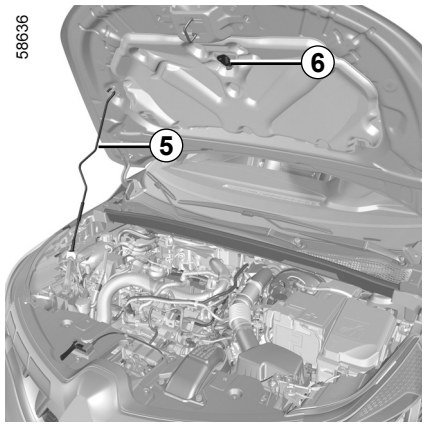

Closing the bonnet

Before closing the bonnet, make sure that nothing has been left in the engine compartment.

To close the bonnet, replace the stay ***5*** in its holder ***6***. Hold the middle of the bonnet and guide it down to one foot (30 cm) above the closed position, then release. It will latch automatically under its own weight.

Ensure that the bonnet is properly locked.
Check that nothing is preventing the catch from locking (gravel, cloth, etc.).

After any procedure in the engine compartment, make sure that you do not forget anything (cloth, tools, etc.).
These may damage the engine or cause a fire.

In the event of even a slight impact involving the radiator grille or bonnet, have the bonnet lock checked by an approved dealer as soon as possible.

OVSE23E2

ENGINE OIL LEVEL: general information

It is normal for an engine to use oil for lubrication and cooling of moving parts and it is normal to top up the level between oil changes.

However, contact your approved Dealer if more than 0.5 litres is being consumed every 600 miles (1 000 km) after the running in period.

Oil change frequency: check the oil level from time to time and certainly before any long journey to avoid the risk of damaging your engine.

Reading the oil level

The oil level should be read with the vehicle on level ground, after the engine has been switched off for some time.

The dipstick must be used to read the exact oil level and make sure that the maximum level has not been exceeded (risk of engine damage).

Depending on the vehicle, the instrument panel display only alerts the driver when the oil level is at its minimum.

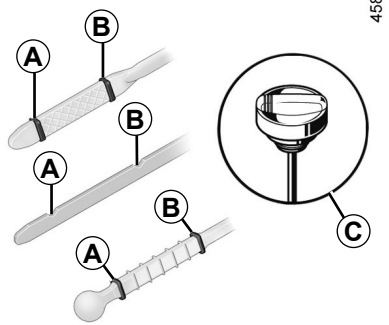

– Remove the dipstick and wipe with a clean, lint-free cloth;

– push the dipstick in as far as it will go (for vehicles equipped with a captype dipstick ***C***, screw the cap in as far as it will go);

– take out the dipstick again;

– read the level: it should never fall below the “mini” mark ***A*** and never exceed the “maxi” ***B*** mark.

Once the operation has been completed, ensure that the dipstick is pushed in as far as it will go or that the “cap-type dipstick” is completely screwed in.

Adding engine oil

Use a funnel or protect the filling neck area to avoid engine oil escaping onto a hot part of the engine compartment or a sensitive part (e.g. electrical components).

Fire hazard.

Exceeding the maximum engine oil level

Under no circumstances should the maximum filling level ***B*** be exceeded: this could damage the engine and anti-pollution system. If the level exceeds the maximum level, **do not start your vehicle** and contact an authorised dealer.

Before carrying out any action in the engine compartment, you must switch off the ignition ➥ 2.4 or ➥ 2.5.

ENGINE OIL LEVEL: topping up, filling, oil change (1/3)

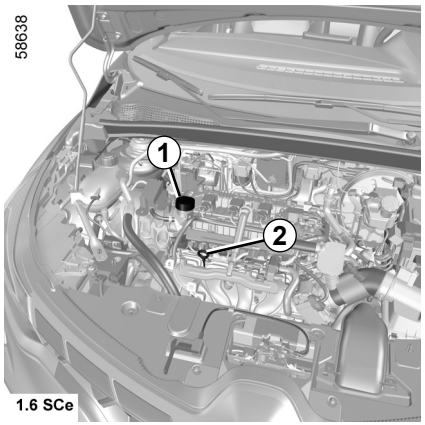

Topping up/filling

The vehicle must be parked on level ground and the engine should be cold (for instance, before the engine is started up for the first time in the day).

Before carrying out any action in the engine compartment, you must switch off the ignition ➥ 2.4 or ➥ 2.5.

Do not exceed the **"maxi"** level and do not forget to refit the cap ***1*** and the dipstick ***2***.

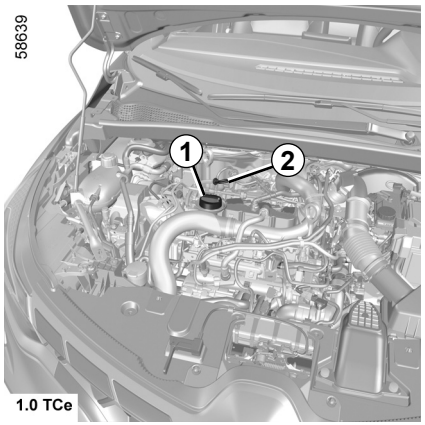

– Unscrew cap ***1***;

– top up the level (capacity between "mini" and "maxi" of the gauge ***2*** and between 0.9 to 2 litres according to the engine);

– wait for approximately 20 minutes to allow the oil to flow into the engine;

– check the level using the dipstick ***2*** (as described above).

Once the operation has been completed, ensure that the dipstick is pushed in as far as it will go or that the cap-type dipstick is completely screwed in.

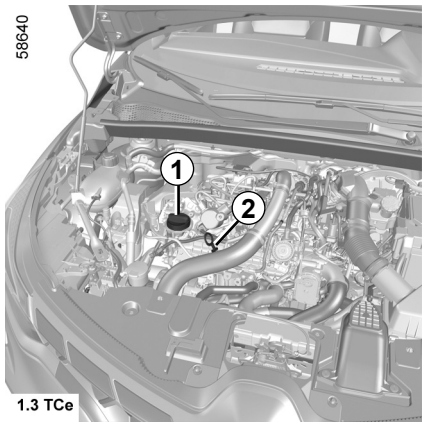

Adding engine oil

Use a funnel or protect the filling neck area to avoid engine oil escaping on to a hot part of the engine compartment or a sensitive part (e.g. electrical components).

Fire hazard.

ENGINE OIL LEVEL: topping up, filling, oil change (2/3)

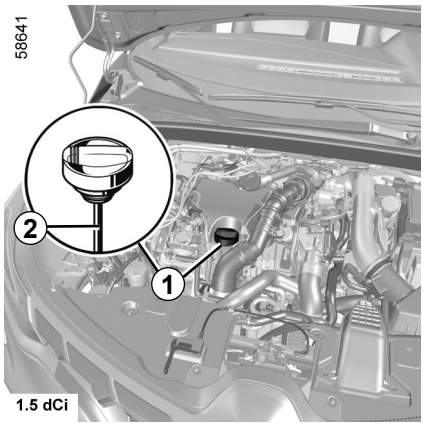

Oil change

Service interval: refer to the maintenance document for your vehicle.

Oil change capacity
Please refer to the maintenance document for your vehicle, or contact an authorised dealer. Always check the engine oil level using the dipstick, as explained previously (it should never fall below the minimum level, or be over the maximum level on the dipstick).

Engine oil grade

Refer to the maintenance document for your vehicle.

Exceeding the maximum engine oil level

Under no circumstances should the maximum filling level be exceeded: this could damage the engine and the emission control system.

If the oil level exceeds the maximum level, **do not start your vehicle** and contact an approved Dealer.

Engine oil change: if you are changing the oil when the engine is hot, be careful not to scald yourself if the oil overflows.

OVSE23E2

ENGINE OIL LEVEL: topping up, filling, oil change (3/3)

Consult your approved dealer at once if you notice an abnormal or repeated drop in any of the fluid levels.



When working in the engine compartment, ensure that the windscreen wiper stalk is in the park position.

Risk of injury.



Filling and/or checking the oil level: when topping up or checking the oil level, ensure that no oil leaks onto the engine components.

Do not forget to properly close the cap and refit the dipstick to prevent any oil spatter on hot engine components.

Fire hazard.



Please note when working close to the engine that it may be hot. The engine cooling fan may also start at any moment. The  label in the engine compartment reminds you of this.

Risk of injury.



Never run the engine in an enclosed space as exhaust gases are poisonous.

OVSE23E2

LEVELS, FILTERS (1/3)

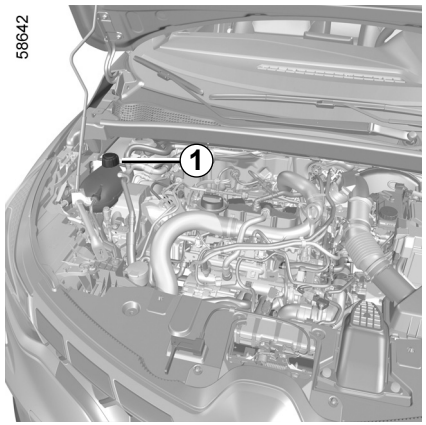

Coolant

With the engine switched off and on level ground, the level **when cold** must be between the “MINI” and “MAXI” marks on coolant reservoir ***1***.

Top this level up **when cold** before it reaches the MINI mark.

Frequency of checking coolant level

Check the coolant level regularly (very severe damage is likely to be caused to the engine if it runs out of coolant).

If the level needs to be topped up, only use products approved by our Technical Department which ensure:

– protection against freezing;

– an anti-corrosion protection for the cooling system.

Before carrying out any action in the engine compartment, you must switch off the ignition ➥ 2.4 or ➥ 2.5.

Replacement interval

Refer to the Maintenance Document for your vehicle.

When working in the engine compartment, ensure that the windscreen wiper stalk is in the park position.

Risk of injury.

Consult your approved dealer at once if you notice an abnormal or repeated drop in any of the fluid levels.

No operations should be carried out on the cooling circuit when the engine is hot.

Risk of burns.

OVSE23E2

LEVELS, FILTERS (2/3)

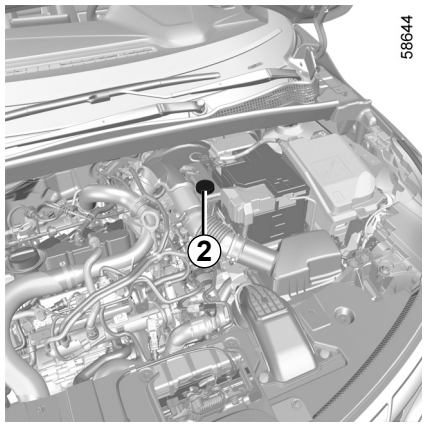

Brake fluid

This should be checked frequently, and immediately if you notice even the slightest loss in braking efficiency.

The level should be read with the engine switched off and on level ground.

Level *2*

It is normal for the level to drop as the brake shoes become worn, but it must never drop lower than the "**MINI**" warning line.

If you wish to check the disc and drum wear yourself, you should obtain the document explaining the checking procedure from the manufacturer's network or website.

Topping up

After any operation on the hydraulic circuit, a specialist must replace the brake fluid.

Only use fluids approved by our Technical Department (and taken from a sealed container).

Replacement interval

Refer to the Maintenance Document for your vehicle.

Consult your approved dealer at once if you notice an abnormal or repeated drop in any of the fluid levels.

Please note when working close to the engine that it may be hot. The engine cooling fan may also start at any moment. The label in the engine compartment reminds you of this.

Risk of injury.

LEVELS, FILTERS (3/3)

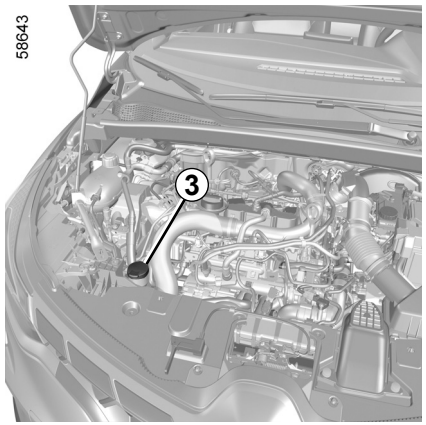

Windscreen washer reservoir

Topping up

With the engine switched off, open the cap ***3***. Fill until you can see the fluid, then replace the cap.

Note: check the reservoir level regularly and top up the liquid before taking a trip.

Liquid

Windscreen washer fluid. In winter, use anti-freeze product. Use products recommended by an authorised dealer.

Note: do not use pure water (risk of damage to the priming pump, limescale building up on the pump and the jets).

Jets

To adjust the height of the windscreen washer jets, please consult an authorised dealer.

Before carrying out any action in the engine compartment, you must switch off the ignition ➥ 2.4 or ➥ 2.5.

Filters

The filter elements (air filter, cabin filter etc.) should be replaced during the maintenance operations carried out on your vehicle.

Replacement intervals for filter elements: refer to the Maintenance Document for your vehicle.

When working in the engine compartment, ensure that the windscreen wiper stalk is in the park position.

Risk of injury.

Please note when working close to the engine that it may be hot. The engine cooling fan may also start at any moment. The label in the engine compartment reminds you of this.

Risk of injury.

OVSE23E2

TYRE PRESSURE (1/2)

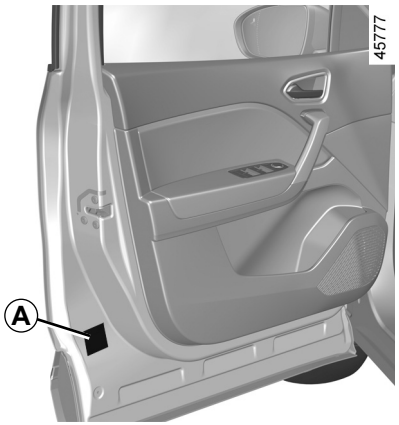

Label *A*

Open the driver's door to read it.

Tyre pressures should be checked when the tyres are cold.

If the tyre pressures cannot be checked when the tyres are **cold**, increase the pressures from **0.2** to **0.3** bar (or **3 PSI**). **Never deflate a hot tyre.**

Vehicle fitted with a tyre pressure loss warning system

In the event of under-inflation (punctures, under-inflation etc.), the  warning light appears on the instrument panel. ➥ 2.32.

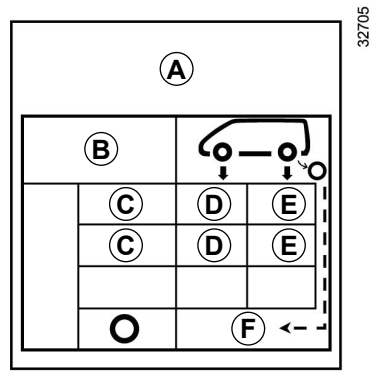

B: dimension of the tyres fitted to the vehicle.

C: intended driving speed.

D: front tyre pressure.

E: rear tyre pressure.

F: tyre pressure for the emergency spare wheel.

TYRE PRESSURE (2/2)

Vehicles used fully laden (Maximum Permissible All-up Weight) and towing a trailer

The maximum speed must be limited to **62 mph (100 km/h)** and the tyre pressure increased by **0.2 bar (3 psi)** ➥ 6.8.

Risk of tyre blowouts.

Tyre safety and chain fitting: for information on servicing conditions and, depending on the vehicle version, the use of chains. ➥ 5.12.

For your safety, please respect the speed limit.

When they need to be replaced, only tyres of the same make, size, type and profile should be used on a single axle.

They must: either have a load capacity and speed rating at least equal to those of the original tyres, or conform to those recommended by an authorised dealer.

Failure to heed these instructions could endanger your safety and affect your vehicle's roadworthiness.

Risk of loss of control of the vehicle.

BATTERY (1/2)

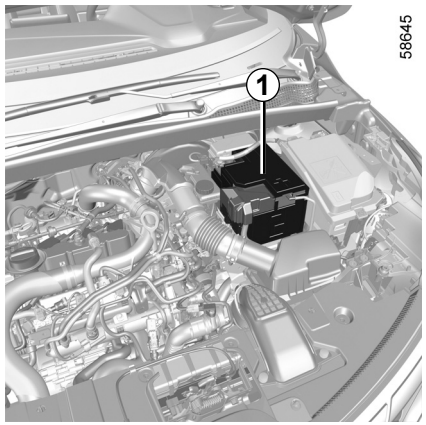

Battery ***1*** does not require any maintenance. **You should not open it or add any fluid.**

Handle the battery with care as it contains sulphuric acid which must not come into contact with the eyes or skin. If it does, wash the affected area with plenty of cold water. If necessary, consult a doctor.

Ensure that naked flames, red hot objects and sparks do not come into contact with the battery as there is a risk of explosion.

Depending on the vehicle, a system continuously checks the battery charge status. If this decreases, the “Battery Now In Standby Mode” message appears on the instrument panel followed by “Battery Low Start Engine”. In this case, start the engine and the message on the instrument panel will disappear.

Note: the message “Battery Now In Standby Mode” may be displayed after 5 to 30 minutes of vehicle use with the engine stopped to warn the user that power consuming functions (interior lighting, radio, navigation, ventilation, accessories power supply, etc.) may be automatically cut off.

The charge status of your battery can decrease especially if you use your vehicle:
– for short journeys;
– for driving in town;
– when the temperature drops;
– after extended use of energy-consuming devices (radio, etc.) with the engine switched off.

Before carrying out any action in the engine compartment, you must switch off the ignition ➥ 2.4 ➥ 2.5.

Please note when working close to the engine that it may be hot. In addition, the engine cooling fan may start at any moment. The warning light in the engine compartment reminds you of this.

Risk of injury.

BATTERY (2/2)

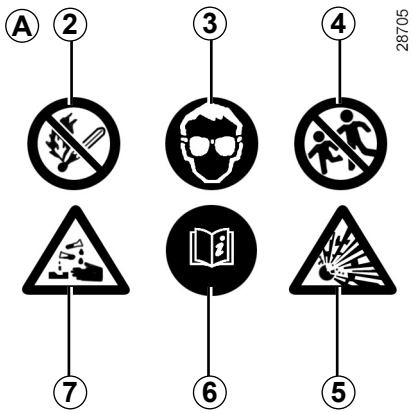

28705

Label *A*

Observe the indications on the battery:

– ***2*** naked flames and smoking are forbidden;
– ***3*** eye protection required;
– ***4*** keep away from children;
– ***5*** explosive materials;
– ***6*** refer to the handbook;
– ***7*** corrosive materials.

For your own safety and for the proper operation of the vehicle's electrical equipment (lights, windscreen wipers, ABS, etc.), any intervention on the battery (removal, disconnection, etc.) must categorically be performed by a specialist professional.

Risk of serious burns or electric shocks.

You must respect the replacement intervals (without exceeding them) as stated in the maintenance document.

The battery is a specific type. Please ensure it is replaced with the same type.

Call an approved Dealer.

OVSE23E2

SECONDARY BATTERY

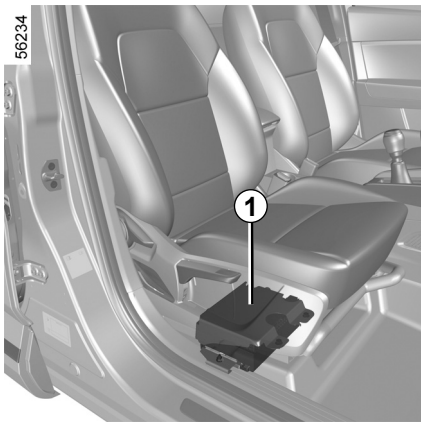

Depending on the vehicle, a secondary battery ***1*** is located under the front passenger seat in a specific compartment: it supplies the energy required to operate some equipment.

The secondary battery ***1*** does not require any maintenance. **You should not open it or add any fluid.**

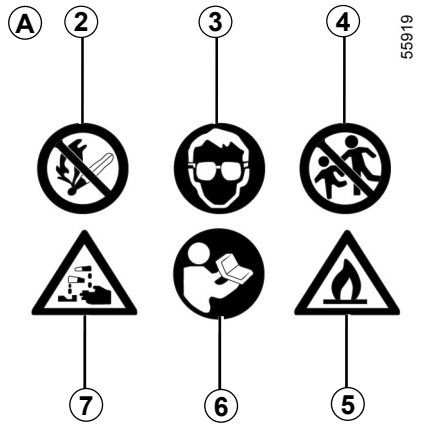

Label *A*

Label A is located on the battery ***1***:

- ***2*** naked flames and smoking are forbidden;
- ***3*** eye protection required;
- ***4*** keep away from children;
- ***5*** flammable materials;
- ***6*** please consult the vehicle user manual;
- ***7*** corrosive substances.

For your own safety and for the proper operation of the vehicle's electrical equipment (lights, windscreen wipers, ABS, etc.), any intervention on the battery (removal, disconnection, etc.) must categorically be performed by a specialist professional.

Risk of serious burns or electric shocks.

The battery is a specific type. Please ensure it is replaced with the same type.

Call an approved Dealer.

BODYWORK MAINTENANCE (1/3)

A well-maintained vehicle will last longer.

It is therefore recommended to maintain the exterior of the vehicle regularly.

Your vehicle has been treated with very effective anti-corrosion products. It is nevertheless subject to various outside influences.

Corrosive agents in the atmosphere

– Atmospheric pollution (in built-up and industrial areas);
– saline atmospheres (near the sea, particularly in hot weather);
– seasonal and damp weather conditions (e.g. road salt in winter, water from road cleaners, etc.).

Minor impacts

Abrasive action

Dust and sand in the air, mud, road grit thrown up by other vehicles, etc.

You should take a number of minor precautions in order to safeguard your vehicle against such risks.

You should

Wash your car frequently, **with the engine off**, with cleaning products recommended by the manufacturer (never use abrasive products).

Rinse thoroughly beforehand with a jet:

– spots of tree resin and industrial grime;
– mud in the wheel arches and underneath the body which forms damp patches;
– **bird droppings**, which cause a chemical reaction with the paint that **rapidly discolours paintwork and may even cause the paint to peel off;**
wash the vehicle **immediately** to remove these marks since it is impossible to remove them by polishing;
– salt, particularly in the wheel arches and underneath the body after driving in areas where the roads have been gritted.

Remove any plant matter (resin, leaves, etc.) from the vehicle regularly.

Respect local regulations about washing vehicles (e.g. do not wash your vehicle on a public highway).

Observe the vehicle stopping distances when driving on gravelled surfaces to prevent paint damage.

Repair, or have repaired quickly, areas where the paint has been damaged, to prevent corrosion spreading.

Remember to visit the body shop periodically in order to maintain your anti-corrosion warranty.

Refer to the maintenance document.

If mechanical components, hinges, etc. have been cleaned, they must be protected again by spraying with products approved by our Technical Department.

We have selected special products to care for your vehicle and you can obtain these from the manufacturer’s accessory outlets.

BODYWORK MAINTENANCE (2/3)

What you should not do

Wash the vehicle in bright sunlight or freezing temperatures.

Do not scrape off mud or dirt without pre-wetting.

Allow dirt to accumulate on the exterior.

Allow rust to form following minor impacts.

Do not use solvents not approved by our Technical Department to remove stains as this could damage the paintwork.

Do not drive in snow or muddy conditions without washing the vehicle, particularly under the wheel arches and body.



Degrease or clean using high-pressure cleaning equipment or by spraying on products not approved by our Technical Department:

- mechanical components (e.g.: engine compartment);
- the wheels (e.g. braking system components such as brake callipers);
- underbody;
- parts with hinges (e.g.: inside the doors);
- painted plastic external fittings (e.g.: bumpers).

Doing this could give rise to corrosion or operational faults.

Vehicles with a matte paint finish

This type of paint requires certain precautions.

You should do the following

Wash the vehicle by hand using plenty of water, using a soft cloth or a gentle sponge.

Do not do the following

Use wax-based products (polishing).

Rub too hard.

Wash the vehicle in a roller-type car wash.

Attach stickers to the paintwork (risk of leaving marks).



Wash the vehicle using a high-pressure cleaning device.

BODYWORK MAINTENANCE (3/3)

Using a roller type car wash

Return the wiper stalk to the park position ➥ 1.98.

Check the mounting of external accessories, additional lights and rear view mirrors, and ensure that the wiper blades are secured with adhesive tape.

Remove the radio aerial mast if your vehicle is fitted with this equipment.

Check that the fuel filler flap is closed then lock the vehicle.

Remember to remove the tape and refit the antenna after washing.

Cleaning the headlights, sensors and cameras

Use a soft cloth or cotton wool.

If this is not sufficient, moisten the cloth with soapy water, always rinsing with a soft cloth or cotton wool.

Finally, carefully dry off with a soft dry cloth.

Do not use cleaning products containing alcohol or utensils (e.g.: a scraper).

Cleaning stickers, decorative films, etc.

You should do the following

Use a soft cloth or cotton wool.

Moisten it slightly with soapy water then always wipe clean with a soft cloth or cotton wool.

Finally, carefully dry off with a soft dry cloth.

Do not do the following

Use alcohol-based cleaning products.

Use utensils (e.g.: scraper).

Rub too hard.



Wash the area using a high-pressure cleaning device.

INTERIOR TRIM MAINTENANCE (1/2)

A well-maintained vehicle will last longer.

It is therefore recommended to maintain the interior of the vehicle regularly.

A stain should always be dealt with swiftly.

Whatever type of stain is on the trim, use **cold** (or warm) **soapy water with natural soap**.

Detergents (washing-up liquid, powdered products, alcohol-based products) should not be used.

Use a soft cloth.

Rinse and soak up the excess.

Multimedia screen

Maintenance of the screen may depend on the type of multimedia equipment.

Please refer to the multimedia instructions for further information.

Glass instrument panel

(e.g. instrument panel, clock, exterior temperature display etc.)

Use a soft cloth (or cotton wool).

If this does not clean them properly, use a soft cloth (or cotton wool) slightly moistened with soapy water and then wipe clean with another soft damp cloth or cotton wool.

Finally, **carefully** dry off with a soft dry cloth.

Do not use products containing alcohol and/or spray fluids on the area.

Seat belts

These must be kept clean.

Use products selected by our Technical Department (approved outlets) or warm, soapy water and a sponge and wipe with a dry cloth.

Detergents or dyes must not be used under any circumstances.

Textiles (seats, door trim, etc)

Vacuum-clean the textiles **regularly**.

Liquid stain

Use soapy water.

Dab lightly (never rub) with a soft cloth, rinse and remove the excess.

Solid or pasty stain

Carefully remove the excess solid or pasty material **immediately** with a spatula (working from the edges to the centre to avoid spreading the stain). Clean as for a liquid stain.

Special instructions for sweets or chewing gum

Put an ice cube on the stain to solidify it, then proceed as for a solid stain.

For further recommendations for maintaining the interior, and/or for any unsatisfactory results, please see an authorised dealer.

INTERIOR TRIM MAINTENANCE (2/2)

Removal/replacing removable equipment originally fitted in the vehicle

If you need to remove equipment in order to clean the passenger compartment (for example, mats), always ensure that they are correctly refitted and are the right way around (the driver's mat should be fitted on the driver's side, etc.) and fit them with the components supplied with the equipment (for example, the driver mat should always be fixed using the pre-fitted mounting components).

With the vehicle stationary, always ensure that nothing will impede driving (anything obstructing the pedals, heel wedged by the mat etc.).

You should not:

Position objects such as deodorants, scents etc. near air vents as this could damage your dashboard trim.



Use high-pressure cleaning equipment or sprays inside the passenger compartment:

without careful use, this equipment could impair the correct functioning of the electrical or electronic components in the vehicle, or have other detrimental effects.

Section 5: Practical Advice

Puncture, emergency spare wheel 5.2
Tyre inflation kit 5.4
Tools 5.7
Wheel trims - wheel 5.9
Changing a wheel 5.10
Tyres (tyre and wheel safety, use in winter) 5.12
Headlights: changing bulbs 5.15
Rear lights and side lights (replacing bulbs) 5.16
Interior lighting (changing bulbs) 5.19
Remote control key: battery. 5.22
“Hands-free” card: battery 5.24
Battery: troubleshooting. 5.26
Fitting a radio. 5.29
Accessories 5.30
Fuses. 5.31
Wiper blades: replacement 5.34
Towing 5.36
Operating faults 5.38

PUNCTURE, EMERGENCY SPARE WHEEL (1/2)

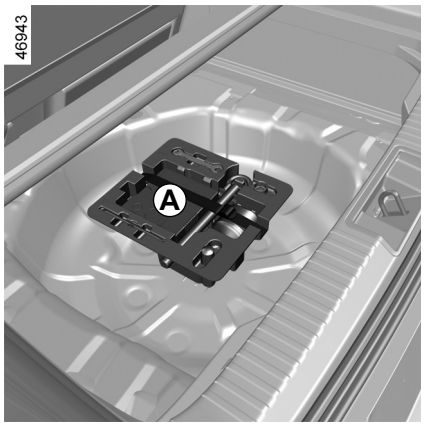

In case of puncture

Depending on the vehicle, a tyre inflation kit ***A*** or a spare wheel ***B*** is provided (refer to the following pages).

Vehicle fitted with a tyre pressure loss warning system

In the event of under-inflation (punctures, under-inflation etc.), the warning light appears on the instrument panel. ➥ 2.32.

If the emergency spare wheel has been stored for several years, have it checked by your Dealer to ensure that it is safe to use.

Vehicle fitted with an emergency spare wheel that differs from the other wheels:

– Never fit more than one emergency spare wheel to the same vehicle.

– Replace the emergency spare wheel as soon as possible with a wheel identical to the original one.

– When this is fitted to the vehicle, which must only be a temporary measure, the driving speed must not exceed the speed indicated on the label on the wheel.

– Fitting an emergency spare wheel may alter the way the vehicle usually runs. Avoid sudden acceleration or deceleration and reduce your speed when cornering.

– If you need to use snow chains, fit the emergency spare wheel to the rear axle and check the tyre pressure.

If the vehicle is parked on the hard shoulder, you must warn other road users of your vehicle's presence with a warning triangle or with other devices as per the legislation applying to the country you are in.

PUNCTURE, EMERGENCY SPARE WHEEL (2/2)

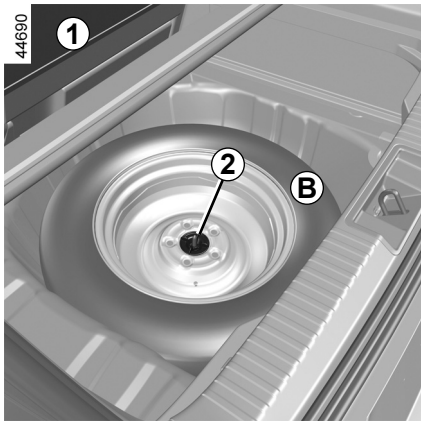

Emergency spare wheel

To get to it:

– open the boot;

– depending on the vehicle, lift up the movable floor and the boot mat ***1*** ➥ 3.38;

– unscrew the central mounting ***2*** in the centre of the emergency spare wheel;

– remove the emergency spare wheel ***B***.

Depending on the vehicle, to store a punctured wheel in the boot, move the bench seat forwards ➥ 3.34.

Note: in the absence of an emergency spare wheel or tyre inflation kit, do not load the bottom of the luggage compartment.

Depending on the vehicle, the tool block is located under or above the spare wheel, attached to the wall under the luggage compartment carpet

TYRE PRESSURE KIT (1/3)

32788



The kit repairs tyres when tread ***A*** has been damaged by objects smaller than 4 mm. It cannot repair all types of puncture, such as cuts larger than 4 mm, or cuts in tyre sidewall ***B***.

Ensure also that the wheel rim is in good condition.

Do not pull out the foreign body causing the puncture if it is still in the tyre.

Do not attempt to use the inflation kit if the tyre has been damaged as a result of driving with a puncture.

You should therefore carefully check the condition of the tyre sidewalls before any operation.

Driving with underinflated, flat or punctured tyres can be dangerous and may make the tyre impossible to repair.

This repair is temporary.

A tyre which has been punctured should always be inspected (and repaired, where possible) as soon as possible by a specialist.

When taking a tyre which has been repaired using this kit to be replaced, you must inform the specialist.

When driving, vibration may be felt due to the presence of the repair product injected into the tyre.

The kit is only approved for inflating the tyres of the vehicle originally equipped with the kit.

It must never be used to inflate the tyres of another vehicle, or any other inflatable object (rubber ring, rubber boat, etc.).

Avoid spillage on skin when handling the repair product bottle. If droplets do leak out, rinse them off with plenty of water.

Keep the repair kit away from children.

Do not dispose of the empty bottle in the countryside. Return it to your approved dealer or to a recycling organisation.

The bottle has a limited service life which is indicated on its label. Check the expiry date.

Contact an approved dealer to replace the inflation tube and repair product bottle.

TYRE PRESSURE KIT (2/3)

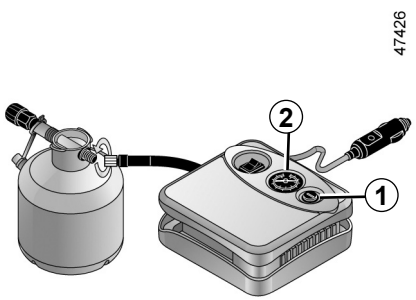

Depending on the vehicle, in the event of a puncture, use the kit located in the boot or underneath the luggage compartment carpet.

Vehicle fitted with a tyre pressure loss warning system

In the event of under-inflation (punctures, under-inflation etc.), the warning light appears on the instrument panel. ➥ 2.32.

Engine running, handbrake applied:

– Disconnect any accessories previously connected to the vehicle's accessories sockets;
– **refer to the information on the inflation kit compressor** located in the luggage compartment of the vehicle and follow the instructions;
– inflate the tyre to the recommended pressure ➥ 4.11 ;
– after a maximum of **15** minutes, stop inflating and read the pressure (on pressure gauge ***2***).

  Note: while the bottle is emptying (approximately 30 seconds), the pressure gauge ***2*** will briefly indicate a pressure of **6** bar, then the pressure drops;

– Adjust the pressure: to increase it, continue inflation with the kit. To reduce it, press the button ***1***.

If a minimum pressure of 1.8 bar is not reached after 15 minutes, repair is not possible; do not drive the vehicle but contact an approved dealer.

Before using this kit, park the vehicle at a sufficient distance from traffic, switch on the hazard warning lights, apply the handbrake, ask all passengers to leave the vehicle and keep them away from traffic.

If the vehicle is parked on the hard shoulder, you must warn other road users of your vehicle's presence with a warning triangle or with other devices as per the legislation applying to the country you are in.

TYRE PRESSURE KIT (3/3)

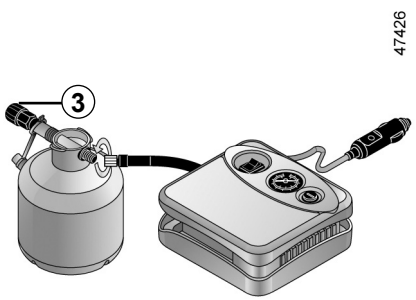

Once the tyre is correctly inflated, remove the kit: unscrew the inflation adapter slowly from the container ***3*** to prevent any product spatter and store the container in plastic packaging to prevent product leaks.

– Affix the driving recommendation label (located under the container) to the dashboard where the driver can see it.
– Put the kit away.
– At the end of this initial inflation operation, air will still escape from the tyre. You must drive a short distance in order to seal the hole.
– Start immediately and drive at a speed between 12 to 37 mph (20 to 60 km/h) in order to distribute the product evenly in the tyre; after driving a distance of 2 miles (3 km), stop and check the pressure.
– If the pressure is higher than 1.3 bar but lower than the recommended pressure (refer to the label affixed to the edge of the driver's door), adjust it. Otherwise, contact an approved dealer: the tyre cannot be repaired.

Precautions when using the kit

The kit should not be operated for more than 15 consecutive minutes.
The container must be replaced after the first use even if liquid remains inside.

Nothing should be placed around the driver's feet as such objects may slide under the pedals during sudden braking manoeuvres and obstruct their use.

Please be aware that a poorly tightened or missing valve cap can make the tyres less airtight and may lead to pressure loss.
Always use valve caps identical to those fitted originally and tighten them fully.

Following repair with the kit, do not travel further than 120 miles (200 km). In addition, reduce your speed and under no circumstances exceed 48 mph (80 km/h). The sticker, which you must affix in a prominent position on the dashboard, reminds you of this.
Depending on the country or local legislation, a tyre repaired with the inflation kit may need to be replaced.

TOOLS (1/2)

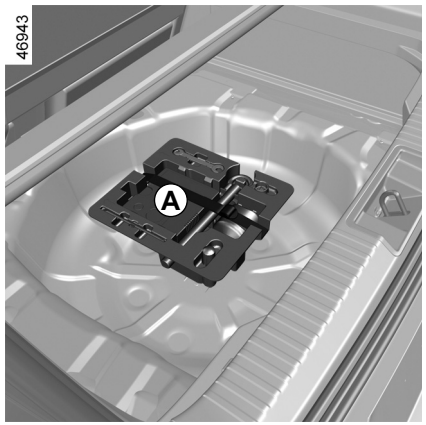

The tools included in the tool kit ***A*** ***B*** or ***C*** depend on the vehicle.

After use, ensure the tools are correctly stored.

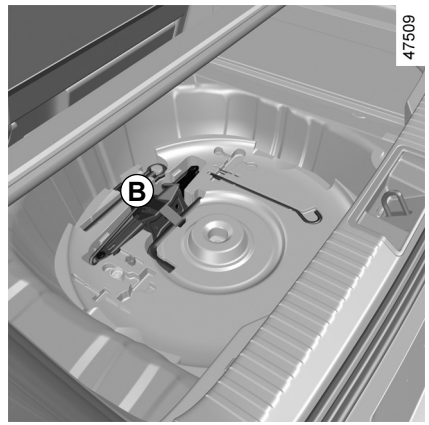

The tool kit ***B*** is located in the tray under the spare wheel

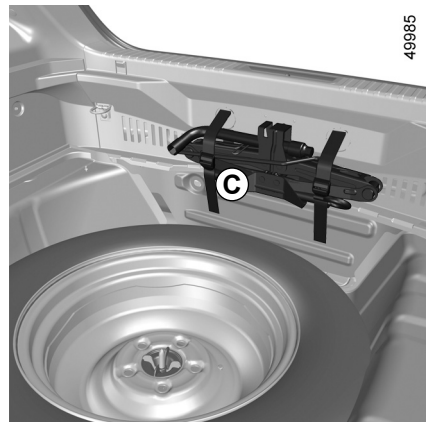

The tool kit ***C*** is located on the storage compartment wall.

TOOLS (2/2)



Lever *1*

This tightens or releases the tow eye ***5***.

Jack *2*

Fold it correctly before refitting it in its housing (ensure that the wheelbrace is correctly positioned).

Hubcap tool *3*

This tool is used to remove the wheel trims.

Wheel bolt guide *4*

To finish loosening or starting to tighten the wheel bolts.

Tow eye *5*

➥ 5.36

Wheelbrace *6*

Locks or unlocks the wheel bolts and tow eye ***5***.

Do not leave the tools unsecured inside the vehicle as they may come loose under braking. After use, check that all the tools are correctly clipped into the tool kit, then position it correctly in its housing: risk of injury.

If bolts are supplied with the emergency spare wheel, you must use these bolts only for the emergency spare wheel.

The jack is designed for wheel changing purposes only. Under no circumstances should it be used for carrying out repairs underneath the vehicle or to gain access to the underside of the vehicle.

WHEEL TRIMS - WHEEL

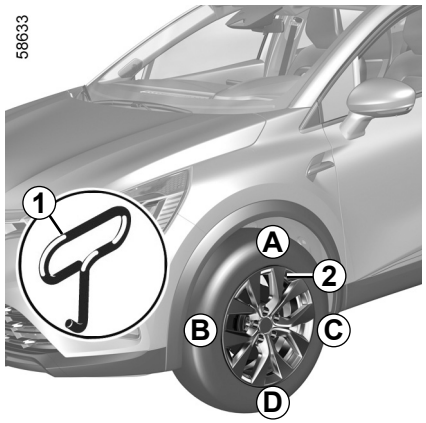

Remove the wheel trim using hubcap tool ***1*** (located in the tool kit) by engaging the hook in the opening near valve ***2***.

To refit it, align it with valve ***2***. Push the retaining hooks in fully, starting with side ***A*** near the valve, followed by ***B*** and ***C***, finishing at ***D*** opposite the valve.

Do not leave the tools unsecured inside the vehicle as they may come loose under braking. After use, check that all the tools are correctly clipped into the tool kit, then position it correctly in its housing.

Risk of injury.

OVSE23E2

CHANGING A WHEEL (1/2)

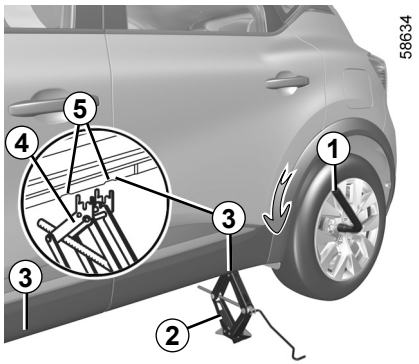

Switch on the hazard warning lights.

Keep the vehicle away from traffic and on a level surface where it will not slip.

Apply the parking brake and engage a gear (first or reverse, or **P** for automatic transmissions).
Ask all the passengers to leave the vehicle and keep them away from traffic.

Vehicles equipped with a jack and wheelbrace

If necessary, remove the wheel trim.

Use the wheelbrace ***1*** to slacken off the wheel bolts. Position it so as to be able to push from above.

Place the jack ***2*** horizontally; the jack head **must** be lined up with the sill closest to the wheel concerned, as shown by an arrow ***3***.

If the vehicle is parked on the hard shoulder, you must warn other road users of your vehicle's presence with a warning triangle or with other devices as per the legislation applying to the country you are in.

Start cranking the jack by hand, positioning the ***4*** jack support plate in the slightly indented groove underneath the vehicle, located between the two notches ***5*** and in the direction of the arrow ***3***.

Continue to crank the jack so that the baseplate is correctly positioned (it should be underneath the vehicle and aligned with the jack head).

Turn it a few times to lift the wheel off the ground.

OVSE23E2

CHANGING A WHEEL (2/2)

Undo the bolts and take off the wheel.

Fit the emergency spare wheel on the central hub and turn it to locate the mounting holes in the wheel and the hub.

Tighten the bolts, checking that the wheel is correctly positioned on its hub.

Lower the jack.

With the wheel on the ground, tighten the bolts fully and have the tightness of the bolts checked and the emergency spare wheel pressure checked as soon as possible.

If you have a puncture, replace the wheel as soon as possible.

A tyre which has been punctured should always be inspected (and repaired, where possible) by a specialist.

Vehicle fitted with a tyre pressure loss warning system

In the event of under-inflation (punctures, under-inflation etc.), the  warning light appears on the instrument panel. ➥ 2.32.

Do not leave the tools unsecured inside the vehicle as they may come loose under braking. After use, check that all the tools are correctly clipped into the tool kit, then position it correctly in its housing: risk of injury.

If bolts are supplied with the emergency spare wheel, you must use these bolts only for the emergency spare wheel.

The jack is designed for wheel changing purposes only. Under no circumstances should it be used for carrying out repairs underneath the vehicle or to gain access to the underside of the vehicle.

OVSE23E2

TYRES (1/3)

Tyre and wheel safety

The tyres are the only contact between the vehicle and the road, so it is essential to keep them in good condition.

You must make sure that your tyres con- form to local road traffic regulations.

Maintaining the tyres

The tyres must be in good condition and the tread form must have sufficient depth; tyres approved by our Technical Department have wear warning strips ***1*** which are **indicators moulded into the tread at several points.**

Incidents which occur when driving, such as striking the kerb, may damage the tyres and wheel rims, and could also lead to misalignment of the front or rear axle geometry. In this case, have the condition of these checked by an approved dealer.

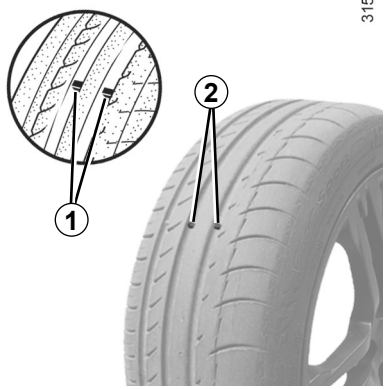

When the tyre tread has been worn to the level of the warning strips, **they become visible *2***: it is **then** necessary to replace your tyres because the tread rubber is now only **1.6 mm deep at most, resulting in poor road holding on wet roads.**

An overloaded vehicle, long journeys by motorway, particularly in very hot weather, or continual driving on poorly surfaced minor roads will lead to more rapid tyre wear and affect safety.

Tyre pressures

Adhere to the tyre pressures (including the emergency spare wheel). The tyre pressures should be checked at least once a month and additionally before any long journey (refer to the label affixed to the edge of the driver's door).

Incorrect tyre pressures lead to abnormal tyre wear and unusually hot running. These are factors which may seriously affect safety and lead to:

– poor road holding;

– risk of bursting or tread separation.

The pressure depends on the load and the speed of use. Adjust the pressure according to the conditions of use (refer to the label affixed to the edge of the driver's door).

TYRES (2/3)

Pressures should be checked when the tyres are cold; ignore higher pressures which may be reached in hot weather or following a fast journey.

If tyre pressures cannot be checked when the tyres are **cold**, assume an increase of **0.2** to **0.3** bar (or **3 PSI**).

Never deflate a hot tyre.

Please be aware that a poorly tightened or missing valve cap can make the tyres less airtight and lead to pressure loss.

Always use valve caps identical to those fitted originally and tighten them fully.

Vehicle fitted with a tyre pressure loss warning system

In the event of under-inflation (punctures, under-inflation etc.), the warning light appears on the instrument panel. ➥ 2.32.

Emergency spare wheel

➥ 5.2, ➥ 5.10.

Changing wheels around

This practice is not recommended.

Fitting new tyres

For your safety, please respect the speed limit.

When they need to be replaced, only tyres of the same make, size, type and profile should be used on a single axle.

They must either have a load capacity and speed rating at least equal to those of the original tyres, or be recommended by an authorised dealer.

Failure to heed these instructions could endanger your safety and affect your vehicle's roadworthiness.

Risk of loss of control of the vehicle.

TYRES (3/3)

Use in winter

Chains

For safety reasons, fitting snow chains to the rear axle is strictly forbidden.

Chains cannot be fitted to tyres which are larger than those originally fitted to the vehicle.

One-way tyres

An one-way tyre must only be fitted in one direction. You must observe this direction.

If an one-way tyre must be fitted in the opposite to its direction of rotation following a puncture, drive with caution, particularly on a wet road, because the tyre specifications will not be adapted.

Chains may only be fitted to tyres of the same size as those originally fitted to **your vehicle**.

Snow or Winter tyres

We would recommend that these be fitted to all **four wheels** to ensure that your vehicle retains maximum adhesion.

Warning: These tyres sometimes have a specific direction of rotation and a maximum speed index which may be lower than the maximum speed of your vehicle.

Studded tyres

This type of equipment may only be used for a limited period and as laid down by local legislation. It is necessary to observe the speed specified by current legislation.

These tyres must, at a minimum, be fitted to the two front wheels.

18" wheels cannot be fitted with chains.

If you wish to fit snow chains, you must use **special equipment**.

Consult an approved dealer

In all cases, we would recommend that you contact an approved Dealer who will be able to advise you on the choice of equipment which is most suitable for your vehicle.

HEADLIGHTS: changing bulbs

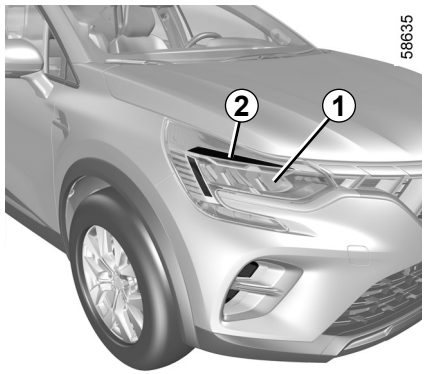

Your vehicle is fitted with lights with LED, contact an Approved Dealer for replacement.

Direction indicators/dipped beam headlights/LED main beam headlights *1*

Please see an authorised dealer.

LED daytime running lights/ side lights *2*

Please see an authorised dealer.

Any operation on (or modification to) the electrical system must be performed by an approved dealer since an incorrect connection might damage the electrical equipment (harness, components and in particular the alternator). In addition, your Dealer has all the parts required for fitting these units.

OVSE23E2

REAR LIGHTS AND SIDE LIGHTS: replacing the bulbs (1/3)

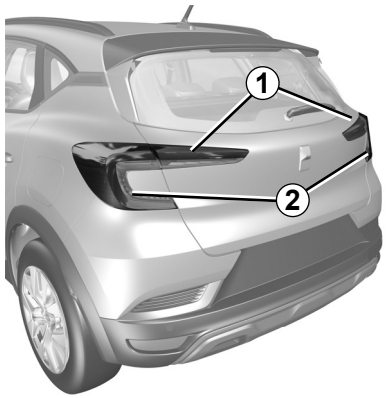

58661

LED side light/brake light *1*

Consult an approved dealer

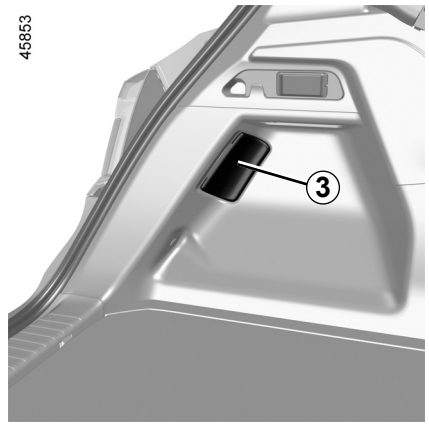

45853

Direction indicators *2*

– Open the boot;
– remove the trim ***3***;
– unscrew the nut ***4***;

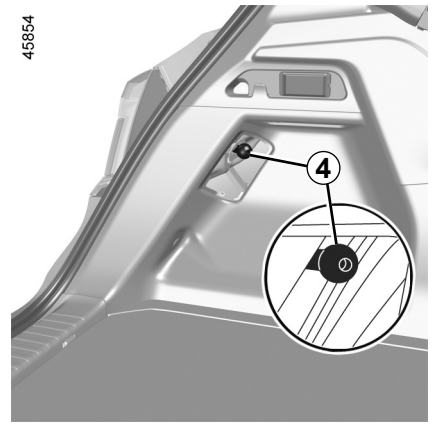

45854

– release the light assembly from outside the vehicle by pulling towards the rear;
– remove the ***5*** bulb holder by unscrewing it a quarter of a turn, then replace the bulb.

Bulb type: WY16W.

The bulbs are under pressure and can break when replaced.

Risk of injury.

To comply with current legislation, or as a precaution, you can obtain an emergency kit from your approved dealer containing a set of spare bulbs and fuses.

OVSE23E2

REAR LIGHTS AND SIDE LIGHTS: replacing the bulbs (2/3)

58660

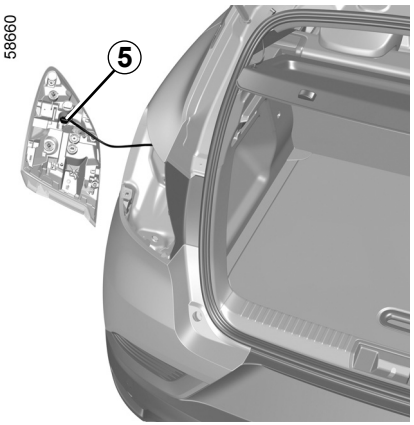

Refitting

To refit, proceed in the reverse order, taking care not to damage the wiring.

58658



Fog lights and LED reversing lights *6*

Consult an approved dealer

58659



High-level LED brake light *7*

Consult an approved dealer.

REAR LIGHTS AND SIDE LIGHTS: replacing the bulbs (3/3)

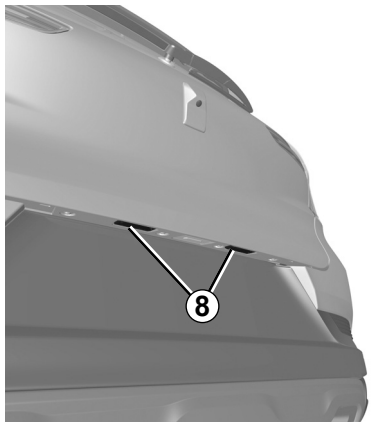

LED number plate lights *8*

(depending on the vehicle)

Consult an approved Dealer.

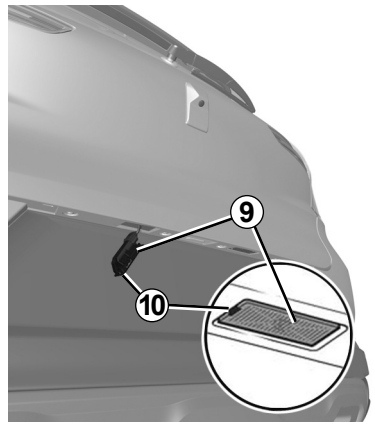

Number plate lights *9*

– Unclip the light by pressing the tab ***10***

– remove the light cover to gain access to the bulb.

Bulb type: W5W.

The bulbs are under pressure and may break when replaced.

Risk of injury.

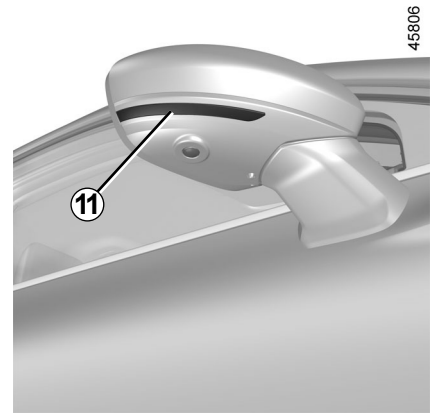

LED side repeaters *11*

Consult an approved dealer.

OVSE23E2

INTERIOR LIGHTING: changing bulbs (1/3)



Courtesy light *A*

– Unclip the lens (using a flat-blade screwdriver or similar);

– remove the bulb concerned.

Bulb type: W5W.

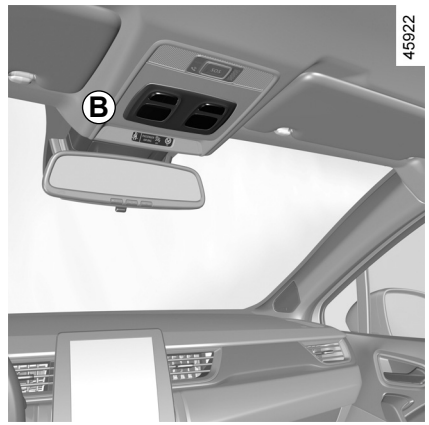

Map reading light *B*

– Unclip the cover (using a flat-blade screwdriver or similar);

– remove the bulb concerned.

Bulb type: W5W.



LED reading lights *C*

Consult an authorised dealer.

The bulbs are under pressure and can break when replaced.

Risk of injury.

OVSE23E2

INTERIOR LIGHTING: changing bulbs (2/3)



Courtesy light *D*

– Unclip the lens (using a flat-blade screwdriver or similar);

– remove the bulb concerned.

Bulb type: W5W.



LED reading lights *E*

Consult an authorised dealer.

INTERIOR LIGHTING: changing bulbs (3/3)

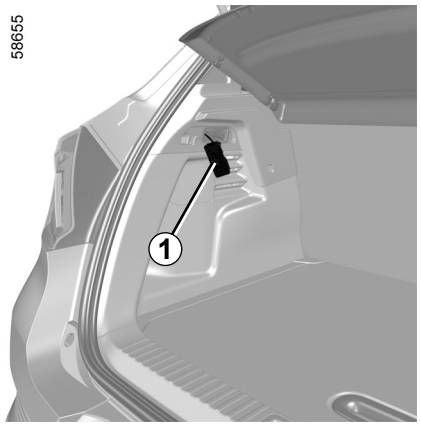

Luggage compartment light

– Unclip the light ***1*** by pressing the tab on its left side (using a flat-bladed screwdriver or similar);

– remove the bulb concerned.

Bulb type: W5W.

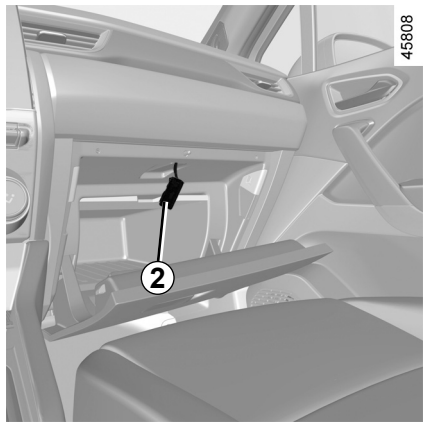

Glovebox light

– Unclip the light ***2*** by pressing the tab on its left side (using a flat-bladed screwdriver or similar);

– remove the bulb concerned.

Bulb type: W5W.

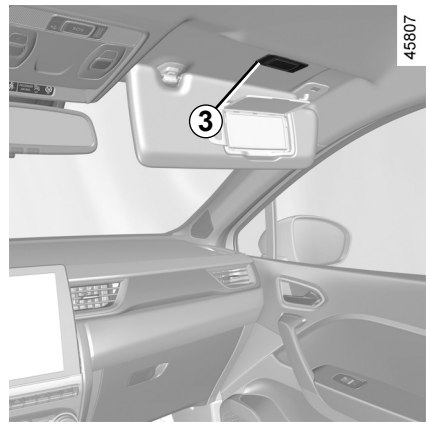

Courtesy mirror lights *3*

Please consult an authorised dealer.

Ambient lighting

Please consult an authorised dealer.

REMOTE CONTROL KEY: BATTERY: battery (1/2)

45856



40619

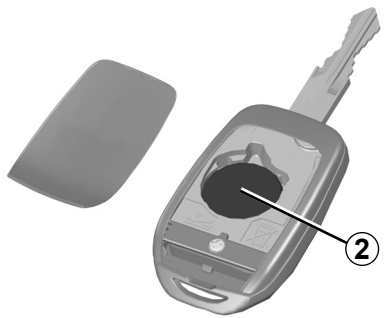

Replacing the battery

Open the case at slot ***1*** using a flat-blade screwdriver or similar, and replace the battery ***2***, observing the type and polarity shown on the back of the cover.

Note: It is not advisable to touch the electronic circuit in the key cover when replacing the battery.

When refitting, ensure that the cover is correctly clipped on and the screw tightened.

If they need to be replaced, be sure to use the same or equivalent type of battery (consult an Approved Dealer).

The batteries are available from approved Dealers, and their service life approximately two years.

Check that there is no dye on the battery: risk of an incorrect electrical contact.

REMOTE CONTROL KEY: BATTERY: battery (2/2)

Operating faults

If the battery is too weak to ensure correct operation, you will still be able to start and lock/unlock the vehicle ➥ 1.16.



Do not throw away your used batteries; give them to an organisation responsible for collecting and recycling batteries.

When replacing:

– make sure that the batteries are correctly inserted.

Risk of explosion.

– if the flap does not close correctly, do not use and keep out of reach of children.

Precautions relating to batteries:

– keep (new or used) batteries out of reach of children;

– do not swallow batteries;

Risk of chemical burns which may lead to death.

– if ingested or inserted into any part of the body, consult a doctor as soon as possible.

OVSE23E2

“HANDS-FREE” CARD: battery (1/2)

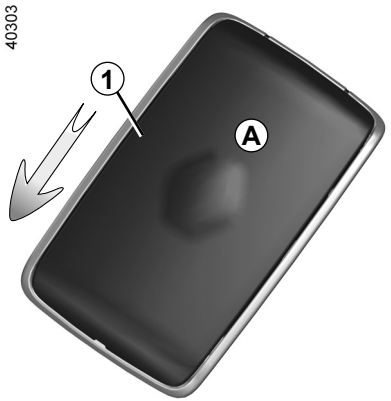

Replacing the battery

When the message “Keycard Battery Low” appears on the instrument panel, replace the battery in the card:

– slide the rear casing ***1*** downwards while pressing on zone ***A***;
– remove the battery cover ***2***;
– remove the battery by pressing on one side and lifting the other;
– replace it according to the direction and template shown inside the cover.

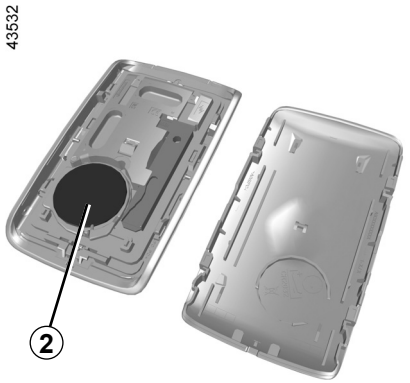

When refitting, proceed in the reverse order, then press one of the buttons on the card four times, close to the vehicle: the next time the vehicle is started, the message will disappear.

Check that the cover is clipped shut.

Note: Do not touch the electronic circuit or contacts on the card when replacing the battery.

The batteries are available from approved Dealers, and their service life approximately two years. Check that there is no dye on the battery: risk of an incorrect electrical contact.

If they need to be replaced, be sure to use the same or equivalent type of battery (consult an Approved Dealer).

When replacing:

– make sure that the batteries are correctly inserted.

Risk of explosion.

– if the flap does not close correctly, do not use and keep out of reach of children.

“HANDS-FREE” CARD: battery (2/2)

Operating faults

If the battery is too weak to ensure correct operation, you will still be able to start and lock/unlock the vehicle ➥ 1.16.



Do not throw away your used batteries; give them to an organisation responsible for collecting and recycling batteries.

Precautions relating to batteries:

– keep (new or used) batteries out of reach of children;

– do not swallow batteries;

Risk of chemical burns which may lead to death.

– if ingested or inserted into any part of the body, consult a doctor as soon as possible.

OVSE23E2

BATTERY: troubleshooting (1/3)

To avoid all risk of sparks:

– Ensure that any power consumers (courtesy lights, etc.) are switched off before disconnecting or reconnecting a battery;

– when charging, stop the charger before connecting or disconnecting the battery;

– do not place metal objects on the battery as this could create a short circuit between the terminals;

– always wait at least five minutes after the engine has been switched off before disconnecting a battery;

– make sure that you reconnect the battery terminals after refitting.



Before carrying out any action in the engine compartment, you must switch off the ignition. ➥ 2.4 ➥ 2.5.

Connecting a battery charger

The battery charger must be compatible with a battery with nominal voltage of 12 volts.

Do not disconnect the battery when the engine is running. **Follow the instructions given by the manufacturer of the battery charger you are using.**



Special procedures may be required to charge some batteries. Contact your approved dealer.

Avoid all risk of sparks which may cause an immediate explosion, and charge the battery in a well ventilated area.

Risk of serious injury.



Handle the battery with care as it contains sulphuric acid, which must not come into contact with eyes or skin. If it does, wash the affected area with plenty of cold water. If necessary, consult a doctor.

Keep naked flames, red hot objects and sparks away from the battery components as there is a **risk of explosion**.

Please note when working close to the engine that it may be hot. In addition, the engine cooling fan may start at any moment. The  warning light in the engine compartment reminds you of this.

Risk of injury.

BATTERY: troubleshooting (2/3)

Starting the vehicle using the battery from another vehicle

If you have to use the battery from another vehicle to start, obtain suitable jump leads (with a large cross section) from an approved dealer or, if you already have jump leads, ensure that they are in perfect condition.

The two batteries must have an identical nominal voltage: 12 volts. The battery supplying the current should have a capacity (amp-hours, Ah) which is at least the same as that of the discharged battery.

Ensure that there is no risk of contact between the two vehicles (risk of short circuiting when the positive terminals are connected) and that the discharged battery is properly connected. Switch off your vehicle ignition.

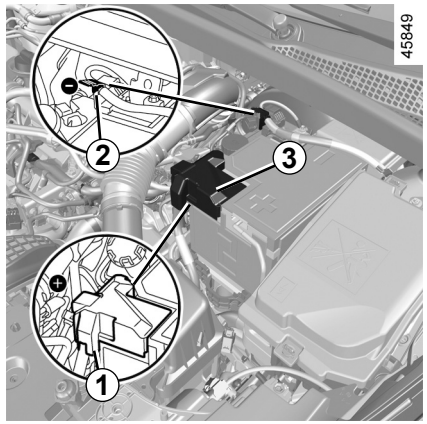

Battery in engine compartment

The battery is not directly accessible.

Use the **terminal *1*** (**+**) and the **terminal *2*** (**–**) in the engine compartment.

Raise the cover ***3*** of the **terminal *1*** (**+**).



BATTERY: troubleshooting (3/3)

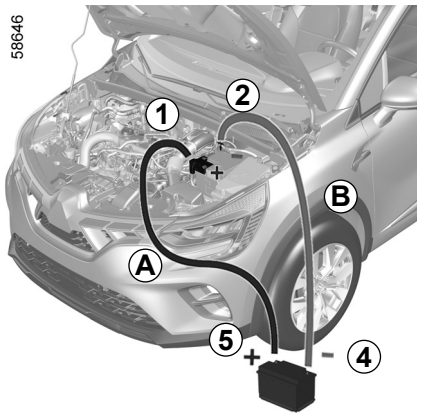

Attach the positive cable ***A*** to the **terminal *1*** (**+**) then to the **terminal *5*** (**+**) of the battery supplying the current.

Attach the negative cable ***B*** to the **terminal *4*** (**–**) of the battery supplying the current and then to the **terminal *2*** (**–**).

Start the engine of the vehicle supplying the current and run it at an intermediate engine speed.

If your vehicle's engine does not start immediately, switch off the ignition and wait a few seconds before repeating the operation.

With the engine running, disconnect the ***A*** and ***B*** cables in the reverse order (***2*** - ***4*** - ***5*** - ***1***).

Reposition the cover ***3*** of the terminal ***1*** (**+**).

Check that there is no contact between leads ***A*** and ***B*** and that the positive lead ***A*** is not touching any metal parts on the vehicle supplying the current.

Risk of injury and/or damage to the vehicle.

OVSE23E2

FITTING A RADIO

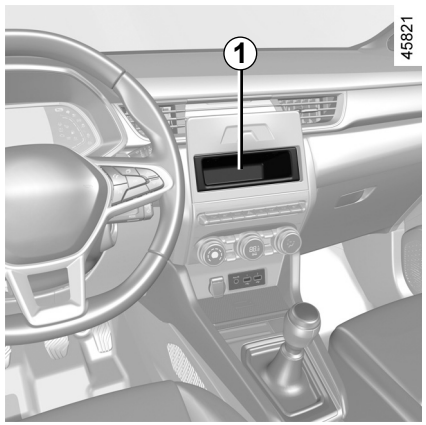

Radio location *1*

Unclip the blanking cover. The connections: (+ aerial) and (– supply and speaker) are located behind it.

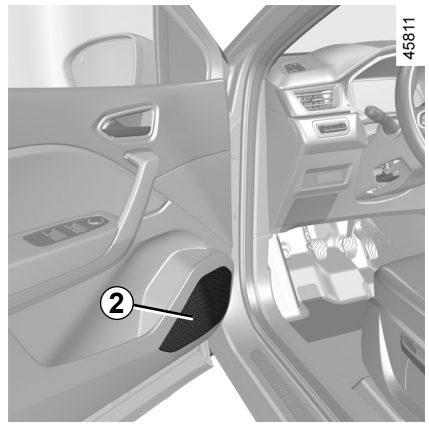

Front door speakers *2*

To install any equipment, please consult an authorised dealer.

– In all cases, it is very important to follow the manufacturer's instructions carefully.
– The specifications of the brackets and wires (available from our network) vary depending on the equipment level of your vehicle and the type of radio.

  Consult an approved Dealer to find out the correct part number.
– No work may be carried out on the vehicle's electrical or radio circuits, except by approved dealers: an incorrectly connected system may result in damage being caused to the electrical equipment and/or the components connected to it.

INSTALLATION AND USE OF ACCESSORIES: important recommendations

Electrical and electronic accessories
Before installing this type of accessory (particularly for transmitters/receivers: frequency bandwidth, power level, position of the aerial, etc.), make sure it is compatible with your vehicle. You can get advice from an authorised dealer.
Before connecting an accessory to a socket, please ensure that you do not exceed the maximum power authorised for the socket ➥ 3.17 ➥ 3.32. **Fire hazard.**
Any work on the vehicle's electrical and/or electronic circuit must only be carried out by a qualified professional. Any incorrect connection and/or installation of electrical/electronic accessories not approved by the manufacturer may cause:
– damage to the electrical and/or electronic equipment;
– damage to the components connected to it;
– the collection and use of vehicle data;
– an invasion of privacy (modification, deletion or unwarranted access to personal data).
Risk of serious accidents. Risk of invasion of privacy.
If you have electrical equipment fitted in future, make sure that you are notified of the rating and position of the corresponding fuse.

Using the diagnostic socket
The use of electronic accessories on the diagnostic socket may cause serious disturbance to the vehicle's electronic systems and/or cause invasion of privacy (modification, deletion or unwarranted access to personal data). For your safety, we recommend that you only use electronic accessories approved by the manufacturer: consult an approved dealer. **Serious accident risk**. **Risk of invasion of privacy.**

Fitting aftermarket accessories
If you wish to install accessories on the vehicle: please contact an authorised dealer. Also, to ensure the correct operation of your vehicle, and to avoid any risk to your safety, we recommend that you use only accessories specifically designed for your vehicle, which are the only accessories for which the manufacturer will provide a warranty.
If you are using an anti-theft device, only attach it to the brake pedal.

Obstructions to the driver
On the driver's side, only use mats suitable for the vehicle, attached with the pre-fitted components, and check the fitting regularly. Do not lay one mat on top of another. **There is a risk of wedging the pedals**

FUSES (1/3)

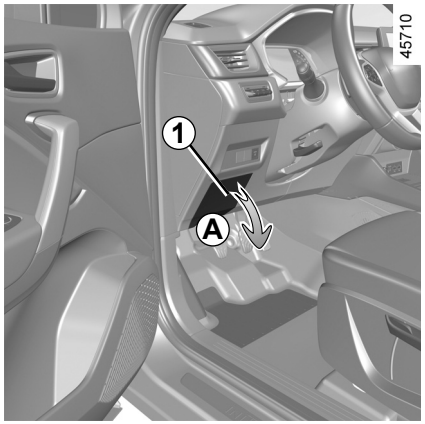

Fuse box

If any electrical component does not work, check the condition of the fuses.

Passenger compartment fuses *A*

Unclip the access flap ***1***.

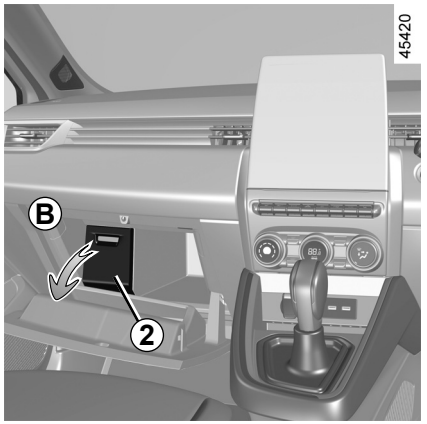

Fuses located in the passenger compartment behind a flap in the *B* glovebox

Unclip the access flap ***2***.

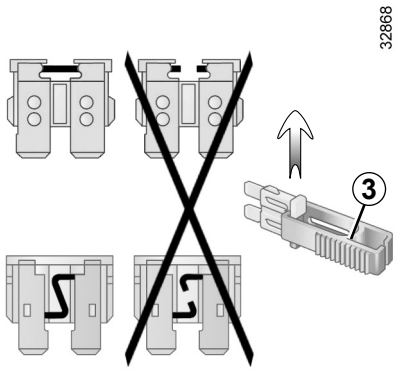

Tweezers *3*

Remove the fuse using the tweezers ***3*** on the back of the flap.
To remove the fuse from the tweezers, slide the fuse to the side.

It is not advisable to use the free fuse locations.

To comply with current legislation, or as a precaution, you can obtain an emergency kit from your approved dealer containing a set of spare bulbs and fuses.

Check the fuse in question and **replace it,** if necessary, **by a fuse of the same rating.**

If a fuse is fitted with too high a rating, it may cause the electrical circuit to overheat (risk of fire) in the event of an item of equipment using an excessive amount of current.

FUSES (2/3)

Allocation of fuses

(the presence of certain fuse depends on the vehicle equipment level)

Symbol	Allocation
	Windscreen washer
	Multimedia accessories socket, multimedia screen
	Front and rear second row accessories socket
	Horn
	Towbar socket
	Heated rear view mirrors
	Brake lights, passenger compartment central unit
	Passenger compartment centre unit, rear wiper, rear fog light
	Direction indicator lights, hazard warning lights, high level brake lights

Use the fuse allocation label in the storage compartment to identify the fuses.

Certain fuses should only be replaced by a qualified professional. These fuses are not listed on the label.

Only change the fuses represented on the label.

FUSES (3/3)

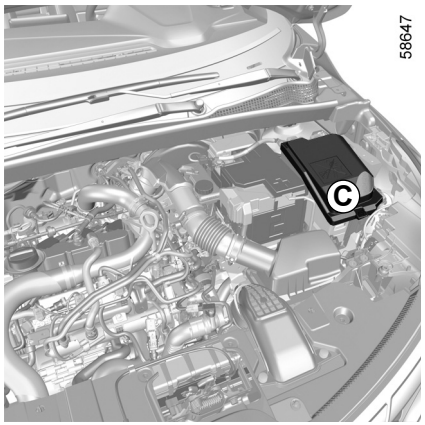

Fuses in engine compartment *C*

Some functions are protected by fuses located in the engine compartment (unit ***C***).

However, because of their reduced accessibility, **we advise you to have your fuses replaced by an approved Dealer**.

Please note when working close to the engine that it may be hot. In addition, the engine cooling fan may start at any moment. The warning light in the engine compartment reminds you of this.

Risk of injury.

Before carrying out any action in the engine compartment, you must switch off the ignition ➥ 2.4 or ➥ 2.5.

OVSE23E2

WIPER BLADES: replacement (1/2)

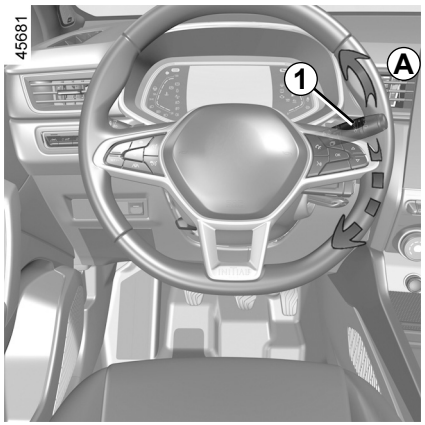

Replacing the windscreen wiper blades 2

To replace the wipers, first put them in the service position***B***.

Engine running or ignition on;

– set the stalk ***1*** to position ***A*** twice in succession (single sweep): the wiper blades will stop in the service position ***B*** away from the bonnet;
– lift the wiper arm ***3***;
– lower the ***4*** tab then remove the blade ***2***.

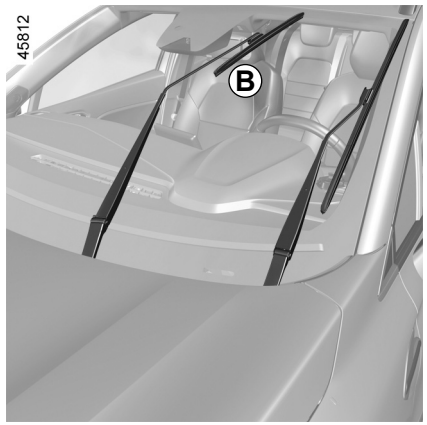

To refit

To refit the wiper blade ***2***, insert it in its housing in the arm ***3***, then clip it until you hear a click. Make sure that the blade is correctly locked in position.

To return the blades to lowered position, make sure that the blades are folded down onto the windscreen then set the ***1*** stalk to position ***A*** (single sweep): the windscreen wiper blades will fold into the bonnet when the ignition is switched on.

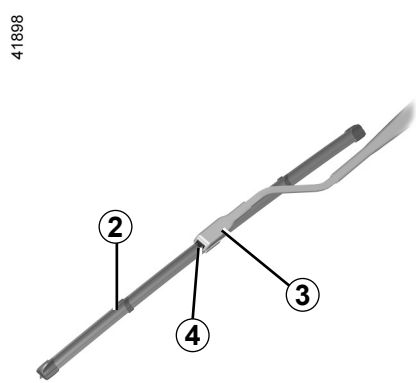

Check the condition of the wiper blades. You are responsible for their service life:

– clean the blades, windscreen and rear screen regularly with soapy water;
– do not use them when the windscreen or rear screen are dry;
– free them from the windscreen or rear screen when they have not been used for a long time.

WIPER BLADES: replacement (2/2)

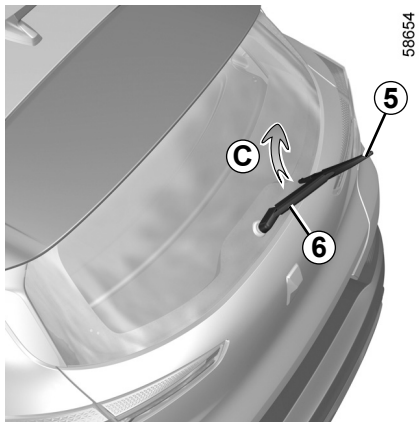

Rear screen wiper blade *5*

Stalk in stop position (deactivated):
– lift the wiper arm ***6***;
– turn the blade horizontally ***5*** (movement ***C***) until it unclips;
– remove the blade by pulling it.

To refit

To refit the wiper blade, proceed in reverse order to removal. Make sure that the blade is correctly locked in position.

Check the condition of the wiper blades.

– clean the blades, windscreen and rear screen regularly with soapy water;
– do not use them when the windscreen or rear screen are dry;
– free them from the windscreen or rear screen when they have not been used for a long time.

– In frosty weather, make sure that the wiper blades are not stuck by ice (to avoid the risk of the motor overheating).
– Check the condition of the wiper blades. Replace the wiper blades as soon as they begin to lose efficiency (approximately once a year).

When changing the blade, when it has been removed, do not let the wiper arm fall against the window: risk of breaking the window.

Before changing the rear wiper blade, make sure the stalk is in the stop position (deactivated).

Risk of injury.

TOWING: breakdown recovery (1/2)

Before carrying out any towing, position the gearbox in neutral position (position **N** on vehicles equipped with an automatic gearbox), unlock the steering column then release the parking brake.

Steering column unlocking

Insert the key into the ignition, set to “On” ON ***2*** position or, depending on the vehicle, with the card in the passenger compartment, press the engine start button for approximately **two seconds**.

Reposition the lever to neutral (position **N** for vehicles fitted with an automatic gearbox).

The steering column unlocks, the accessory functions are powered: you can use the vehicle’s lights (direction indicators, brake lights, etc.). At night the vehicle must have its lights on.

Depending on the vehicle, once you have finished towing, press the engine start button twice (risk of running down the battery).

The speed specified by current legislation for towing must always be observed. If you are driving the towing vehicle, do not exceed the permissible towing weight for your vehicle ➥ 6.8.

Towing a vehicle with an automatic transmission, mechanical lever

Transport the vehicle on a trailer or tow it with the front wheels off the ground.

In exceptional circumstances, you may tow it with all four wheels on the ground, only in a forward gear, with the gearbox in neutral position **N**, over a maximum distance of 50 miles (80 km) and not exceeding a speed of 16 mph (25 km/h).

Leave the card in the vehicle during towing.

Risk of the steering column locking.

OVSE23E2

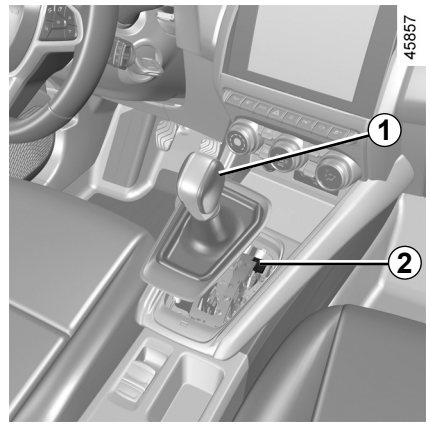

When setting off, if the lever is locked in position **P** even though you are pressing the brake pedal, the lever can be released manually in order to unlock the drive wheels.

To do this, unclip the base of the gaiter and press the ***2*** button while simultaneously pressing the ***1*** button on the lever to unlock the lever.

Contact an authorised dealer as soon as possible.

TOWING: breakdown recovery (2/2)

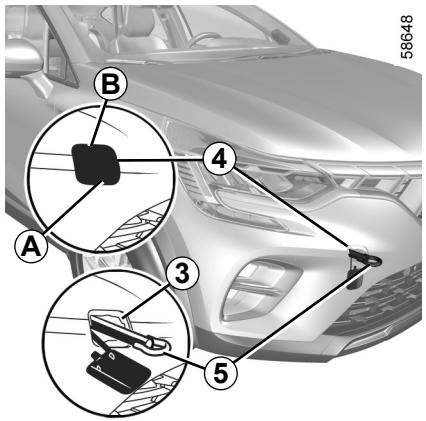

Only use the front *3* and rear *7* towing points (never use the driveshafts or any other part of the vehicle). These towing points may only be used for pulling. They must never be used for lifting the vehicle directly or indirectly.

When the engine is stopped, steering and braking assistance are not operational.

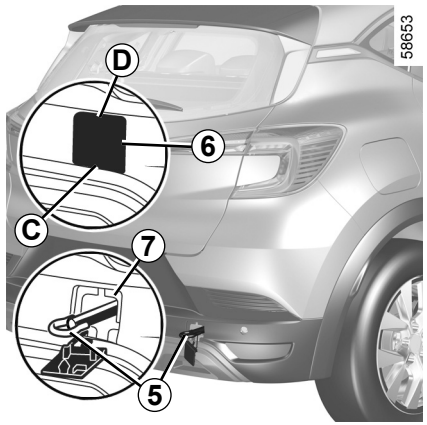

Access to towing points

Front towing point
Press zone ***A*** and keep depressed while pulling zone ***B*** to open flap ***4***.

Rear towing point
Press zone ***C*** and keep depressed while pulling zone ***D*** to open flap ***6***.

Ensure that the towing eye is bolted correctly.

Risk of losing the towed object.

Tighten the towing hitch *5* fully: first by hand until it stops, then finish by locking it with the wheel brace or, depending on the vehicle, the lever.

Only use the towing hitch ***5*** and the wheelbrace or lever provided with the tools ➥ 5.7.

– Use a rigid towing bar. If a rope or cable is used (where the law allows this), the vehicle being towed must be able to brake.
– A vehicle must not be towed if it is not fit to be driven.
– Avoid accelerating or braking suddenly when towing, as this may result in damage being caused to the vehicle.
– In all cases, it is advisable not to exceed **15.5 mph (25 km/h)**.

Do not leave the tools unsecured inside the vehicle as they may come loose under braking.

OPERATING FAULTS (1/7)

Using the card	POSSIBLE CAUSES	WHAT TO DO
The card does not lock or unlock the doors.	Card battery is flat.	Replace the battery. You will still be able to lock/unlock and start your vehicle. ➥ 1.16 and ➥ 2.4 or ➥ 2.5.
	Use of appliances operating on the same frequency as the card (mobile phone, etc.).	Stop using the devices or use the key provided. ➥ 1.16.
	Vehicle located in an area with strong electromagnetic radiation. Vehicle battery discharged.	Use the key that is built into the card ➥ 1.16.
	The message “Place card on zone + START” appears on the instrument panel.	Place the card in the placement area ➥ 2.5 then press the START button.
	The vehicle is started.	With the engine running, the card’s locking/unlocking device is blocked. Turn off the ignition.
	Desynchronisation of the card	Unlock the driver’s door by inserting the key integrated in the card into the door lock ➥ 1.16 then place the card in the placement area ➥ 2.5 and press the START button to synchronise the card.

OPERATING FAULTS (2/7)

The following advice will enable you to carry out quick, temporary repairs. For safety reasons you should always contact an approved dealer as soon as possible.

Using the remote control	POSSIBLE CAUSES	ACTION REQUIRED
The remote control does not lock or unlock the doors.	The remote control battery is flat.	Use the emergency key.
	Use of appliances operating on the same frequency as the remote control (mobile phone, etc.).	Stop using the devices or use the key.
	Vehicle located in a high electromagnetic radiation zone. Discharged battery.	Replace the battery. You will still be able to lock/unlock and start your vehicle. ➥ 1.16 and ➥ 2.4 or ➥ 2.5.
	The vehicle is started.	With the engine running, the key's locking/unlocking device is blocked. Turn off the ignition.
	Desynchronisation of the remote control	Unlock the driver's door by inserting the key into the door lock ➥ 1.16, then start the engine to synchronise the remote control ➥ 2.4 or ➥ 2.5.

OPERATING FAULTS (3/7)

The starter is activated	POSSIBLE CAUSES	ACTION REQUIRED
The instrument panel indicator lights are weak or fail to light up and the starter does not turn.	Battery terminals not tight, battery terminals disconnected or oxidised.	Retighten or reconnect the terminals, or clean them if they are oxidised.
	Discharged battery or not operational.	Connect another battery to the faulty battery. ➥ 5.26 or replace the battery if necessary. Do not push the vehicle if the steering column is locked.
	Faulty circuit.	Consult an approved dealer.
The engine will not start.	Starting conditions are not fulfilled.	➥ 2.4 or ➥ 2.5.
	The “hands-free” card does not work.	Place the card in the recess provided for this purpose on the centre console ➥ 2.4 or ➥ 2.5.
With the vehicle stationary, engine cold, the engine’s idle speed is high.	Petrol version, this is not necessarily a fault. This may be caused by the increase in the engine temperature.	The engine’s idle speed should decrease after about one minute. Otherwise, this may be caused by another fault. Call an approved Dealer.
The engine cannot be switched off.	Card not detected.	Place the card in the recess provided for this purpose on the centre console. Press and hold the start button.
	Electronic fault.	Press the start button 3 times quickly or press and hold.
The steering column remains locked.	Steering wheel locked.	Move the steering wheel while pressing the engine start button (or, depending on the vehicle, operating the ignition key) ➥ 2.4.
	Faulty electrical circuit.	Consult an approved dealer.

OPERATING FAULTS (4/7)

On the road	POSSIBLE CAUSES	WHAT TO DO
Vibrations.	Tyres not inflated to correct pressures, incorrectly balanced or damaged.	Check the tyre pressures: if this is not the problem, have them checked by an approved Dealer.
White smoke from the exhaust.	Petrol version, this is not necessarily a fault. Depending on the climate conditions (cold, humidity etc.), smoke may be produced under hard vehicle acceleration.	Reduce the engine speed and avoid sudden acceleration to gradually make the smoke disappear. Otherwise, this may be caused by another fault. Consult an approved dealer.
Smoke under the bonnet.	Short-circuit or cooling system leak.	Stop, switch off the ignition, stand away from the vehicle and contact an approved dealer.
The oil pressure warning light comes on:		
while cornering or braking.	The level is too low.	Top up the engine oil ➥ 4.5.
is slow to go out or remains lit up under acceleration.	Loss of oil pressure.	Stop the vehicle and contact an approved Dealer.

OPERATING FAULTS (5/7)

On the road	POSSIBLE CAUSES	WHAT TO DO
Steering becomes heavy.	Assistance overheating.	Drive carefully at reduced speed, be aware of the level of force in the steering wheel needed to turn the wheels.
	Fault with the electric assistance motor. Fault in the assistance system	Consult an authorised dealer.
The engine is overheating. The coolant temperature indicator is in the warning zone and warning light STOP comes on.	Engine cooling fan not working.	Stop the vehicle, switch off the engine and contact an approved dealer.
	Coolant leaks.	Check the coolant reservoir: it should contain fluid. If there is no coolant, consult an authorised dealer as soon as possible.
Coolant boiling in the coolant reservoir.	Mechanical fault: damaged cylinder head gasket.	Stop the engine. Contact an approved dealer.

Radiator: In the event of a significant lack of coolant, remember that you must never top up using cold coolant while the engine is very hot. After any procedure on the vehicle which has involved even partial draining of the cooling system, it must be refilled with a new mixture prepared in the correct proportions. Reminder: only products approved by our Technical Department may be used for this purpose.

OPERATING FAULTS (6/7)

Electrical equipment	POSSIBLE CAUSES	WHAT TO DO
The wipers do not work.	Wiper blades stuck.	Free the blades before using the wipers.
	Faulty electrical circuit.	Consult an approved dealer.
	Fuse damaged.	Replace the fuse or have it replaced ➥ 5.31.
The wiper does not stop.	Faulty electrical controls.	Consult an approved dealer.
Direction indicators flashing more quickly.	Blown rear bulb.	➥ 5.16.
The direction indicators do not work.	Faulty electrical circuit or control.	Consult an approved dealer.
	Fuse damaged.	Replace the fuse or have it replaced ➥ 5.31.
The lights do not come on or go off.	Faulty electrical circuit or control.	Consult an approved dealer.
	Fuse damaged.	Replace the fuse or have it replaced ➥ 5.31.

OPERATING FAULTS (7/7)

Electrical equipment	POSSIBLE CAUSES	WHAT TO DO
Traces of condensation in the headlights or rear lights.	Traces of condensation may be a natural phenomenon caused by variations in temperature and humidity. In this case, the traces will disappear slowly once the lights are switched on.	
The front seat belt reminder light comes on when the seat belts are fastened.	An object is stuck between the floor and the seat and is disrupting the operation of the sensor.	Remove all objects from underneath the front seats.

Section 6: Technical Specifications

Vehicle identification plate 6.2
Engine identification 6.3
Dimensions 6.4
Engine specifications 6.5
Weights 6.8
Towing weights 6.8
Replacement parts and repairs 6.9

VEHICLE IDENTIFICATION PLATES



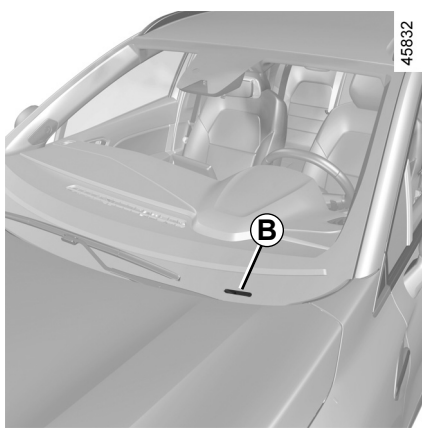

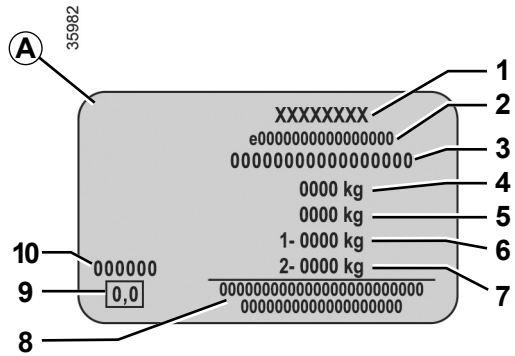

The information shown on the vehicle identification plate should be quoted on all correspondence or orders.

The presence and location of the information depends on the vehicle.

Vehicle identification plate *A*

1 Manufacturer name.
2 EC design number or approval number.
3 Identification number.
Depending on the vehicle, this information is also given on marking *B*.
4 MMAC (Maximum permissible all-up weight).
5 MTR (Gross train weight: vehicle fully loaded, with trailer).
6 MMTA (Maximum Permissible Weight) front axle.
7 MMTA rear axle.
8 Reserved for related or additional entries.
9 Not used.
10 Paint reference (colour code).

ENGINE IDENTIFICATION

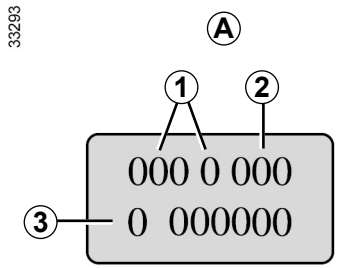

Please quote the engine identification information in area *A* in all correspondence or orders.
(Location varies depending on engine)

1 Engine type.
2 Engine suffix.
3 Engine serial number.

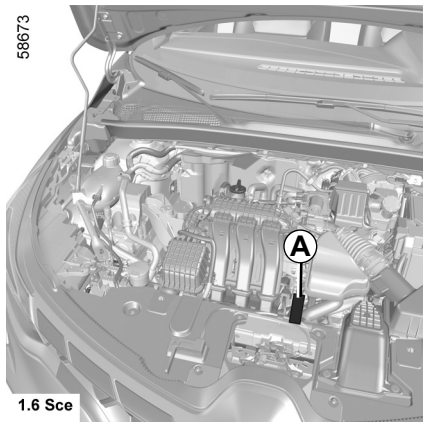

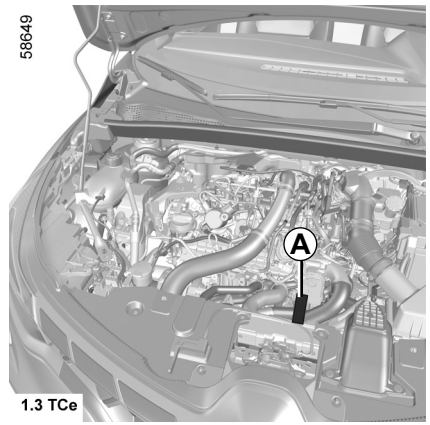

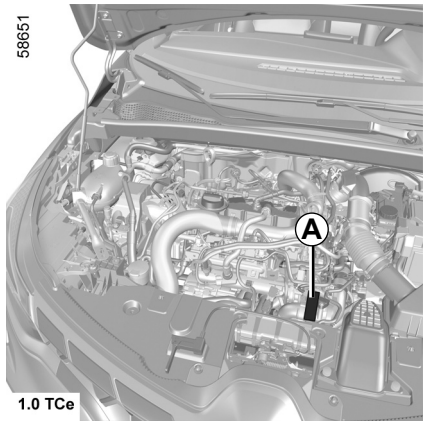

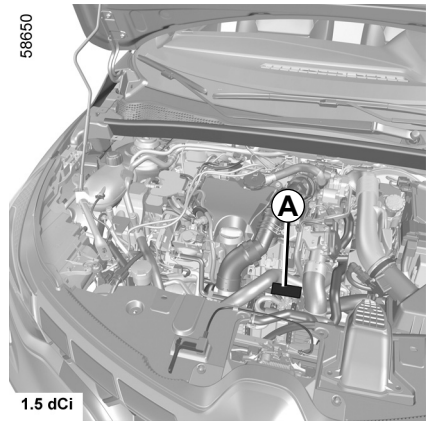

OVSE23E2

DIMENSIONS (in metres)

58652

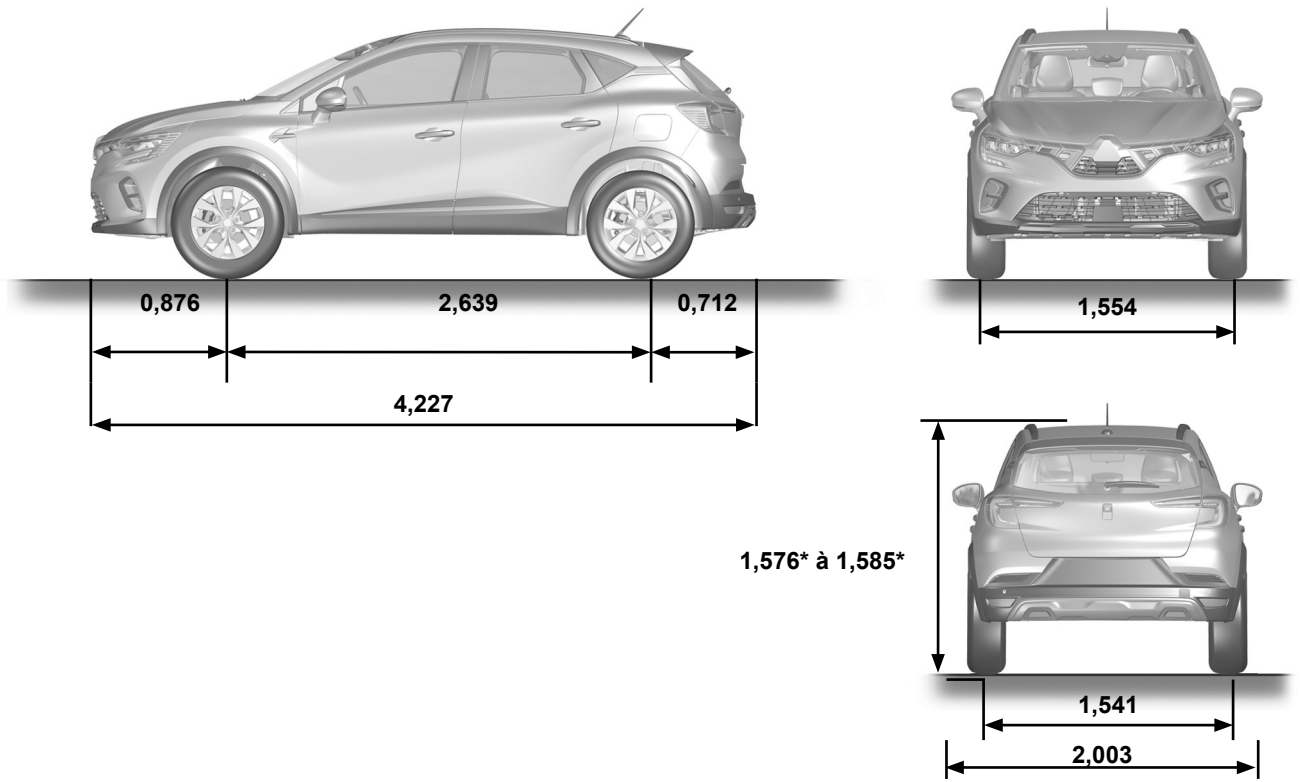

* unladen

OVSE23E2

ENG_UD78998_1
Dimensions (en mètres) (HJB MMC - Mitsubishi)

ENGINE SPECIFICATIONS (1/3)

Versions	1.6 SCe	1.0 TCe	1.3 TCe
Engine type (see engine plate)	H4M	H4D Turbo	H5H Turbo
Cubic capacity (cc)	1598	999	1 330
Type of fuel **Octane rating**	Petrol You **must** use unleaded petrol with the octane rating stated on the label inside the fuel filler flap ➥ 1.105.		

ENGINE SPECIFICATIONS (2/3)

Versions	1.6 SCe	1.0 TCe	1.3 TCe
Engine type (see engine plate)	H4M	H4D Turbo	H5H Turbo
Cubic capacity (cc)	1598	999	1 330
Fuel types that meet European standards and are compatible with the engines of vehicles sold in Europe (in any other case, contact an Approved Dealer).	 Unleaded petrol compliant with standard **EN 228** contains up to 5% ethanol in volume.  Unleaded petrol compliant with standard **EN 228** contains up to 10% ethanol in volume.		

ENGINE SPECIFICATIONS (3/3)

Versions	1.6 SCe	1.0 TCe	1.3 TCe
Engine type (see engine plate)	H4M	H4D Turbo	H5H Turbo
Cubic capacity (cc)	1598	999	1 330
Spark plugs	Only use the spark plugs specified for your vehicle's engine. The type should be marked on a label affixed inside the engine compartment. If it is not then contact an approved Dealer. Fitting spark plugs other than those specified may damage the engine.		

WEIGHTS (in kg)

The weights indicated for a basic vehicle without options: they vary depending on your vehicle's equipment. Consult your approved Dealer.

Maximum Authorised Mass (MMAC) **Maximum permissible weight (MMTA)** **Gross Train Weight (MTR)**	Weights indicated on the vehicle identification plate ➥ 6.2
Braked Trailer Weight*	found by calculating: **MTR - MMAC**
Unbraked Trailer Weight*	630 kg
Permissible nose weight*	75 kg
Maximum permissible load on roof	80 kg (including carrying device)

*** Towing weight (towing a caravan, boat, etc.)**

Towing is prohibited when the MTR - MMAC calculation is equal to zero, or when the MTR is equal to zero (or is not listed) on the identification plate.

– It is important to comply with the towing weights, governed by local legislation in each country and, in particular, laid down in the Road Traffic Regulations. Contact an approved Dealer about any towing equipment.
– When towing, under no circumstances may **the total train weight (vehicle + trailer) be exceeded**. However the following is permitted:
  – rear axle MMTA exceeded by no more than 15%,
  – maximum MMAC exceeded by no more than 10% or 100 kg (whichever is reached first).

  In either case, the maximum speed of the vehicle and trailer must not exceed 60 mph (100 km/h) and the tyre pressures must be increased by 0.2 bar (3 PSI).
– The engine output and climbing capability are reduced with altitude. We recommend that the maximum load be reduced by 10% at an altitude of 1,000 metres and by an additional 10% for each 1,000 metres thereafter.

REPLACEMENT PARTS AND REPAIRS

Original parts are based on strict specifications and are subject to highly-specialised tests. Therefore, they are of at least the same level of quality as the parts fitted originally.

If you always fit genuine replacement parts to your vehicle, you will ensure that it performs well. Furthermore, repairs carried out within the manufacturer’s Network using original parts are guaranteed according to the conditions set out on the reverse of the repair order.

ALPHABETICAL INDEX (1/7)

A

ABS .....1.58, 2.38 → 2.42
access
  vehicle.....0.2, 1.2 → 1.12
  accessories.....2.6, 5.30
accessories - installation 5.30
accessories socket .....3.17 – 3.18, 3.32
adaptive cruise control.....2.86 → 2.99
additional methods of restraint
  side protection 1.35
  to the front seat belts .....1.28 → 1.33
  to the rear seat belts 1.34
additional methods of restraint 1.36
additional tank capacity .....1.70 – 1.71, 1.76
additional tank filling 1.59
adjusting your driving position ....1.21 → 1.27, 1.89, 1.91, 3.33
advice on antipollution 1.78, 2.30
air bag
  activating the front passenger air bags.....1.45, 1.48, 1.51 → 1.53
air bag..... 0.6, 1.28 → 1.36, 1.43, 1.45 → 1.49, 1.51 → 1.53, 1.57, 1.61, 1.78
air conditioning .....3.3 → 3.16
air vents .....3.3 – 3.4
airbag
  front passenger airbag deactivation.....1.49, 1.51 → 1.53
ambient lighting 5.21
anti-corrosion protection 4.16
anti-lock braking system: ABS .....2.38 → 2.42
antipollution
  advice 2.30
armrest
  front.....1.21, 3.30
ashtray.....3.32
audible and visual signals.....1.96
AUTO mode.....1.90 → 1.92
Autohold 2.21
automatic gearbox
  breakdown recovery 5.36
automatic gearbox (use).....2.16, 2.20, 2.126 → 2.129
automatic gearbox selector lever.....2.126 → 2.129
automatic locking of the doors while driving.....1.20

B

batteries.....5.22 → 5.25
battery
  breakdown recovery .....5.26 → 5.28
battery.....0.8, 1.57, 4.13 – 4.14, 5.26 → 5.28
battery (remote control) .....5.22 – 5.23
beep.....1.79
blind spot warning signal .....2.54 → 2.60
blind spot: warning signal .....2.54 → 2.60
bonnet.....4.2 – 4.3
brake.....2.21
brake fluid 4.9
breakdown recovery 0.9
bulbs
  changing .....5.15 → 5.21

C

card .....1.6 → 1.12
card: battery.....5.24 – 5.25
card: use.....1.6 → 1.12
catalytic converter.....2.14 – 2.15
central door locking .....1.2 – 1.3, 1.5 → 1.12, 1.16 → 1.20, 1.80 – 1.81
changing a bulb .....5.15 → 5.18
changing a wheel.....5.10 – 5.11
changing gear.....1.58, 2.16, 2.22 – 2.23, 2.126 → 2.129
child restraint/seat .....1.37 – 1.38, 1.40 → 1.50

ALPHABETICAL INDEX (2/7)

child safety..... 0.3, 1.2 – 1.3, 1.7, 1.9, 1.13, 1.15, 1.33, 1.37 – 1.38, 1.40 → 1.53, 3.19 → 3.21, 3.23
child seats.....1.37 – 1.38, 1.40 → 1.50
children.....0.3, 1.37 – 1.38, 1.43 → 1.53, 3.19 – 3.20
children (safety)..... 1.15, 3.21, 3.23
cigar lighter..... 3.32
cleaning:
inside the vehicle ..... 4.19 – 4.20
clock
setting ..... 1.70 – 1.71, 1.74
clock ..... 1.83 – 1.84, 1.84
closing the doors ..... 1.6 → 1.12, 1.14 → 1.20
configuration menu.....1.80 → 1.82
control instruments ..... 1.56 → 1.61, 1.63 → 1.72, 1.83 – 1.84, 1.84
controls
doors/opening elements 1.4
steering wheel..... 3.17 – 3.18
controls..... 0.4, 1.54 – 1.55, 2.77, 2.81
courtesy light .....3.25 → 3.27, 5.19
courtesy mirrors..... 3.24, 5.21
cruise control .....1.60, 2.81 → 2.99
cruise control-speed limiter.....1.60, 2.77 → 2.85
customised vehicle settings .....1.80 → 1.82
customising the vehicle settings .....1.80 → 1.82

D

dashboard..... 0.4, 1.54 – 1.55
daytime running lights .....1.2 – 1.3, 1.6 → 1.8, 1.81, 1.90 → 1.95
deadlocking the doors 1.5, 1.13
demisting
rear screen.....3.5, 3.11 → 3.14
windscreen.....3.8, 3.11 → 3.14
dimensions 6.4
dipstick..... 4.4
display ..... 1.56 → 1.61, 1.63 → 1.68, 3.17
doors..... 1.14 – 1.15, 1.58, 1.80 – 1.81
doors and tailgate .....1.2 – 1.3, 1.9 → 1.12
doors/tailgate..... 1.4, 1.6 → 1.12, 1.16 → 1.20
driver assistance..... 0.5, 2.38, 2.43 → 2.99, 2.116 → 2.125, 2.130 → 2.132, 3.2
driver's position .....0.4, 1.54 → 1.61
driving .....
0.5, 1.80 – 1.81, 2.2, 2.4 → 2.9, 2.14 – 2.15, 2.17 → 2.29, 2.23 → 2.29, 2.32 → 2.72, 2.77 → 2.99, 2.116 → 2.132, 3.2
driving aids .....0.5, 1.60, 1.81 – 1.82, 2.43 → 2.125, 2.130 → 2.132, 3.2
driving position
settings .....0.3, 1.23 → 1.27, 1.85 – 1.86
driving recommendations ..... 2.22 → 2.24, 2.27 → 2.29

E

ECO driving .....1.59, 2.22 → 2.29
ECO mode..... 2.22 – 2.23, 2.27, 2.29, 3.13, 3.15
«ECO» mode function 1.59
electric beam height adjustment..... 1.97
electric windows ..... 3.19 – 3.20
electronic parking brake .....1.58, 2.17 → 2.21
electronic stability control: ESC.....2.38 → 2.42
emergency active braking.....1.60, 2.65 → 2.72
emergency brake assist.....1.60, 2.38 → 2.42
emergency braking..... 1.60, 2.38 → 2.42, 2.65 → 2.72
emergency call .....2.130 → 2.132
emergency key .....1.6 → 1.8
emergency spare wheel ..... 5.2 – 5.3
energy
«ECO» mode 1.59
engine
technical specifications .....6.5 → 6.7
engine coolant ..... 1.59, 1.64, 1.66 – 1.67, 4.8
engine identification..... 0.7, 6.3

ALPHABETICAL INDEX (3/7)

engine oil ....4.4 → 4.7
engine oil capacity ....4.5 → 4.7
engine oil level ....1.58, 1.62, 4.4 → 4.7
engine specifications ....6.3, 6.5 → 6.7
engine standby ....1.60, 2.10 → 2.13
engine start/stop button ....2.5 → 2.9
environment 2.31
equipment
fitting 3.40
equipment
multimedia 5.29
ESC: electronic stability control ....1.58, 2.38 → 2.42
external temperature ....1.83 – 1.84

F

faults
operating faults ....2.14 – 2.15, 2.20, 2.39 → 2.42, 2.45 – 2.46, 2.51 – 2.52, 2.58, 2.69, 2.76, 2.120, 2.129, 2.132, 3.15, 3.20, 5.31 → 5.33, 5.38 → 5.44
file 1.21
filter
air filter 4.10
oil filter ....4.5 → 4.7
particle filter 1.59, 2.15
passenger compartment filter 4.10
fitting a radio 5.29
fittings ....3.28 → 3.31
flap
fuel flap 0.2
front seat adjustment
electric controls 1.21
front seat adjustment ....1.21 – 1.22
front seats
adjustment ....1.21 → 1.23, 1.89
fuel
advice on fuel ....2.22 → 2.29, 2.23 → 2.29
consumption ....2.22 → 2.24, 2.27, 2.29
filling ....1.105 → 1.107
quality ....1.105 → 1.107
fuel consumption ..1.70 – 1.71, 2.22 → 2.24, 2.27 – 2.28, 3.15
fuel economy ....2.22 → 2.29, 2.23 → 2.29
fuel filler cap ....1.4, 1.105 → 1.107
fuel level ....1.56 → 1.61, 1.59, 1.63 → 1.68, 1.105
fuel tank
capacity 1.105
fuel tank capacity ....1.105 → 1.107
fuses ....0.9, 5.31 → 5.33

G

gear lever 2.16, 2.126

H

handbrake ....2.16 – 2.17
hands-free telephone integrated control ....3.17 – 3.18
«hands-free» card: battery ....5.24 – 5.25
hazard warning lights signal 1.96
headlight beam adjustment 1.97
headrest
rear 3.33
headrest 1.89, 3.33
heated seats 1.22
heated steering wheel 1.85
heated windscreen ....3.11 → 3.14
heating and air conditioning system ....3.5 → 3.15
heating system ....3.5 → 3.14
Hill Start Assist ....2.38 → 2.42
horn 1.96
horn:
flash 1.96
hubcap tool ....5.7 → 5.9

ALPHABETICAL INDEX (4/7)

I

ignition switch ..... 2.3, 2.17 → 2.20
indicator lights 5.18
indicators ..... 1.96, 2.56, 5.15 → 5.18
indicators:
  direction indicators 1.96
  instrument panel . 1.56 → 1.61, 1.63 → 1.68, 1.65 → 1.72, 2.10 → 2.13, 2.15 → 2.29, 2.23 → 2.30, 2.34 → 2.37
  information and general advice
  welcome aboard your vehicle 0.1
instrument panel ..... 0.4, 1.56 → 1.61, 1.63 → 1.68, 1.65 → 1.79, 1.81 – 1.82, 2.10 → 2.13, 2.16 → 2.29, 2.23 → 2.30, 2.34 → 2.37
instrument panel messages... 1.69 → 1.79, 2.10 → 2.13, 2.15, 2.17 → 2.20, 2.34 → 2.37
interior lighting:
  changing bulbs ..... 5.19 → 5.21
interior trim
  maintenance ..... 4.19 – 4.20
Isofix ..... 1.40 → 1.42, 1.44, 1.48 → 1.50

J

jack ..... 5.3, 5.7 – 5.8, 5.10 – 5.11

K

key/remote control
  deadlocking 1.5
keys ..... 1.2 → 1.5

L

lane centring ..... 2.106 → 2.115
lane departure warning ..... 1.60, 2.43 → 2.53
Lane Keeping Assist ..... 2.48 → 2.53
lane keeping: assistance ..... 2.48 → 2.53
levels ..... 0.8, 4.8 → 4.10
levels:
  brake fluid 4.9
  coolant 4.8
  windscreen washer reservoir 4.10
lifting the vehicle
  changing a wheel ..... 5.10 – 5.11
lighting
  exterior 0.2
  glovebox 5.21
lighting:
  exterior ..... 1.90 → 1.97
  instrument panel ..... 1.90 → 1.95
  interior ..... 3.25 → 3.27, 5.19 → 5.21
  see-me-home ..... 1.80 – 1.81, 1.94
lights
  adjustment 1.97
  changing bulbs 5.15
  front 5.15
lights:
  adjusting 1.97
  adjustment of headlight beam height 1.97
  brake lights ..... 5.16 → 5.18
  dipped beam headlights ..... 1.57, 1.90 – 1.91, 1.93 – 1.94, 5.15
  direction indicators ..... 1.57, 1.96, 5.15 – 5.16
  fog lights ..... 1.57, 1.90 → 1.95, 5.17
  hazard warning 1.96
  main beam headlights ..... 1.57, 1.90 → 1.92, 5.15
  number plate lights ..... 5.17 – 5.18
  reversing lights 5.17
  side lights ..... 1.90, 1.94, 5.15 – 5.16
lights-on warning buzzer 1.93
load permitted on the roof 6.8
locking ..... 1.24 → 1.27
locking the doors .... 1.4, 1.6 → 1.12, 1.14 → 1.20, 1.80 – 1.81

ALPHABETICAL INDEX (5/7)

locking/unlocking the opening elements
map ..... 1.6 → 1.8
locking/unlocking the opening elements 1.5

M
maintenance 2.30, 3.15
maintenance:
bodywork ..... 4.16 → 4.18
interior trim ..... 4.19 – 4.20
mechanical ..... 4.4, 4.13 – 4.14
mileage before service ..... 1.70 – 1.71, 1.75 – 1.76
map
hands-free ..... 1.9 → 1.12
map reading lights ..... 3.25 → 3.27, 5.19
menu for customising the vehicle settings ..... 1.69, 1.80 → 1.82
methods of restraint in addition to the seat belts ..... 1.28 → 1.36
mileage before service ..... 1.70 – 1.71, 1.75 – 1.76
mobile floor 3.38
Motorway and Traffic assistant ..... 2.100 → 2.115
multimedia (equipment) ..... 3.17 – 3.18
multimedia equipment ..... 1.62, 1.67, 1.80, 1.83, 1.93, 3.17 – 3.18
Multi-Sense 1.86, 3.2

N
navigation ..... 3.17 – 3.18
navigation system ..... 3.17 – 3.18

O
oil change ..... 4.5 → 4.7
opening the doors ..... 1.14 → 1.20
opening/closing
luggage compartment 1.4
sunroof 1.4
operating faults
card battery ..... 5.24 – 5.25
remote control batteries ..... 5.22 – 5.23
operating faults ..... 1.3, 1.20, 1.22, 1.30, 1.53, 1.56 → 1.61, 1.69 → 1.71, 1.78 – 1.79, 1.92 – 1.93, 1.100, 2.6, 2.13 – 2.15, 2.20, 2.39 → 2.42, 2.45 – 2.46, 2.51 – 2.52, 2.58, 2.69, 2.76, 2.93, 2.120, 2.129, 2.132, 3.15, 3.20, 5.31 → 5.33, 5.38 → 5.44
operation 2.126
overspeed buzzer 1.63, 1.65, 1.68
overspeed warning ..... 1.60, 2.73 → 2.77

P
paint
maintenance ..... 4.16 → 4.18
parking brake ..... 1.77, 2.17 → 2.21
parking distance control ..... 1.81 – 1.82, 2.116 → 2.122, 2.120, 2.123 → 2.125
pedestrian detection ..... 2.65 → 2.72
power-assisted steering 1.86
precautions during use ..... 1.98 → 1.102
pretensioners ..... 1.28 → 1.33
puncture ..... 0.9, 1.79, 5.2 → 5.8, 5.10 – 5.11

Q
QR Code 0.7

R
radio
fitting a radio 5.29
radio ..... 3.17 – 3.18
radio frequency remote control/key
battery ..... 5.22 – 5.23
use ..... 1.2 → 1.4
range with fuel ..... 1.59, 1.63, 1.65, 1.67 – 1.68

ALPHABETICAL INDEX (6/7)

rear bench seat..... 1.42, 1.44, 3.34 – 3.35
rear parcel shelf..... 1.44, 3.37
rear seat 1.42
rear seats
functions ..... 3.34 – 3.35
rear seats..... 1.26, 3.33
rear view camera.....2.123 → 2.125
rear view mirrors.....0.2, 1.86 → 1.88
remote control
card.....1.6 → 1.8
deadlocking..... 1.5
map.....1.6 → 1.8
remote control .....1.9 → 1.12
remote control door locking unit .....1.2 → 1.4
replacement
remote control batteries ..... 5.22 – 5.23
replacement parts..... 6.9
reverse gear
selecting..... 2.16
reversing sensor.....2.116 → 2.122
roof bars ..... 3.41 – 3.42
roof rack
roof bars..... 3.41 – 3.42
running in..... 2.2

S

safety distance warning.....2.61 → 2.64
safety distances.....2.61 → 2.64
screen
navigation display ..... 3.17 – 3.18
navigation screen..... 3.17 – 3.18
screen wash/wipe
replacing blades..... 1.101, 5.34 – 5.35
screen wash/wipe..... 1.102
screens
multimedia screen.....2.25 – 2.26, 2.51 → 2.53, 2.55, 2.62, 2.68, 2.74, 2.118 – 2.119, 2.123, 3.2, 3.13, 3.17 – 3.18
seat belt pretensioners
front seat belt .....1.28 → 1.33
seat belt pretensioners 1.34
seat belts .. 0.6, 1.23 → 1.33, 1.36, 1.40 → 1.42, 1.45 → 1.50, 1.61, 4.19
seats
front seat with electric controls 1.21
seats..... 0.3
settings
configuration menu .....1.80 → 1.82
settings .....1.80 → 1.82
Shift Paddle 2.126
side protection devices..... 1.34 – 1.35
sign detection: overspeed warning.....2.73 → 2.76
signals and lights.....1.90 → 1.97
speakers
location 5.29
special features of petrol vehicles ..... 2.14 – 2.15
speed limiter .....1.60, 2.77 → 2.80
spoiler..... 3.42
starting..... 1.77
starting the engine.....2.3 → 2.13
steering wheel
adjustment 1.85
steering wheel controls..... 3.17 – 3.18
Stop & Start .....1.86, 1.107, 2.21 → 2.23
Stop & Start function.....2.10 → 2.13, 2.17, 2.21 → 2.23
stopping the engine .....2.4, 2.7, 2.17 → 2.20
storage compartment.....3.28 → 3.31
storage compartments.....3.28 → 3.31
storage/organisation..... 0.3
sun visor 3.24

ALPHABETICAL INDEX (7/7)

sunroof....3.21 → 3.23
switching on the vehicle ignition....2.3 → 2.9

T
tailgate....1.2 – 1.3, 1.6 → 1.8, 1.15, 1.18, 3.36, 3.38 – 3.39
tank
  Brake fluid....4.9
  Coolant....4.8
tanks and reservoirs:
  windscreen washer....4.10
technical specifications....6.4 → 6.9
telephone....3.17 – 3.18
temperature regulation....3.11 → 3.14
tool kit....5.3, 5.7 → 5.9
tools....5.7 → 5.9
towing
  breakdown....5.36 – 5.37
  towing equipment....3.40
towing....0.9
towing a caravan....3.40, 6.8
towing hitch....5.7 – 5.8, 5.36 – 5.37
towing rings....3.39
towing weights....6.8
traction control....1.58, 2.38 → 2.42
traction control system: ASR....2.38, 2.40
transporting children....1.37 – 1.38, 1.40 → 1.50
transporting objects
  in the luggage compartment....3.39
  on the roof....6.8
trims....5.9
trip computer and warning system....1.56 → 1.61, 1.63, 1.65, 1.69 → 1.79, 1.81
tyre inflation kit....2.35, 5.2, 5.4 → 5.6
tyre pressure....0.7, 1.70 – 1.71, 1.74, 2.29, 2.32 → 2.37, 4.11 – 4.12, 5.2, 5.5 – 5.6, 5.11, 5.13
tyre pressure loss warning....1.59, 2.32 → 2.37, 5.5, 5.11
tyre pressures....2.32 → 2.37, 4.11 – 4.12, 5.4 → 5.6, 5.11, 5.13
tyres....0.2, 2.29, 2.32 → 2.37, 4.11 – 4.12, 5.12 → 5.14

U
unlocking the doors....1.6 → 1.12, 1.16 → 1.20
USB socket....3.17

V
variable power-assisted steering....1.86
vehicle detection....2.65 → 2.72
vehicle identification....0.7
vehicle identification number (VIN)....0.7
vehicle identification plates....0.7, 6.2
ventilation
  ventilation....3.3 – 3.4
ventilation....3.3 → 3.14

W
warning lights....1.56 → 1.61, 1.63 → 1.68, 1.65 → 1.79, 2.77 → 2.80
washing....4.16 → 4.18
weights....6.8
welcome aboard your vehicle....0.1
wheelbrace....5.7 – 5.8, 5.10 – 5.11
wheels (safety)....5.12 → 5.14
windows....0.2
windscreen de-icing/demisting....3.8, 3.11 → 3.14
windscreen washer....1.98 → 1.104, 1.104
windscreen washer/wiper....1.80 – 1.81, 5.34 – 5.35
wiper blades....0.9, 1.99, 1.102, 5.34
wipers....1.98 → 1.104, 1.104
wireless charger....3.18