GROUP 1

BRAKING EQUIPMENT

CONTENTS

1.1. MECHANICAL CONDITION AND OPERATION 1-2

1.1.1. Service brake pedal/hand lever pivot 1-2

1.1.2. Pedal/hand lever condition and travel of the brake operating device 1-2

1.1.3. Vacuum pump or compressor and reservoirs 1-2

1.1.4. Low pressure warning gauge or indicator 1-2

1.1.6. Parking brake activator, lever control, parking brake ratchet, electronic parking brake 1-2

1.1.8. Couplings for trailer brakes (electrical & pneumatic) 1-2

1.1.9. Energy storage reservoir pressure tank 1-2

1.1.11. Rigid brake pipes 1-2

1.1.12. Flexible brake hoses 1-3

1.1.13. Brake linings and pads 1-3

1.1.14. Brake drums, brake discs 1-3

1.1.15. Brake cables, rods, levers, linkages 1-5

1.1.16. Brake actuators (including spring brakes or hydraulic cylinders) 1-5

1.1.17. Load sensing valve 1-6

1.1.18. Slack adjusters and indicators 1-6

1.1.19. Endurance braking system (where fitted or required) 1-6

1.1.20. Automatic operation of trailer brakes 1-6

1.1.22. Test connections (where fitted or required) 1-6

1.1.23. Overrun brake 1-6

1.2 SERVICE BRAKING PERFORMANCE AND EFFICIENCY 1-6

1.2.1. Performance 1-6

1.2.2. Efficiency 1-6

1.3. SECONDARY (EMERGENCY) BRAKING PERFORMANCE AND EFFICIENCY (IF MET BY SEPARATE SYSTEM) 1-7

1.3.1. Performance 1-7

1.3.2. Efficiency 1-7

1.4. PARKING BRAKING PERFORMANCE AND EFFICIENCY 1-7

1.4.1. Performance 1-7

1.4.2. Efficiency 1-7

1.5. ENDURANCE BRAKING SYSTEM PERFORMANCE 1-7

1.6. ANTI-LOCK BRAKING SYSTEM (ABS) 1-8

1.7 ELECTRONIC BRAKE SYSTEM (EBS) 1-8

1.8 BRAKE FLUID 1-8

1.1. Mechanical condition and operation

1.1.1. Service brake pedal/hand lever pivot

M6101010100061

"Not Applicable"

1.1.2. Pedal/hand lever condition and travel of the brake operating device

M6101010200068

"Not Applicable"

1.1.3. Vacuum pump or compressor and reservoirs

M6101010300065

"Not Applicable"

1.1.4. Low pressure warning gauge or indicator

M6101010400062

"Not Applicable"

1.1.6. Parking brake activator, lever control, parking brake ratchet, electronic parking brake

M6101000100060

LEVER TYPE PARKING BRAKE

CONSTRUCTION DIAGRAM

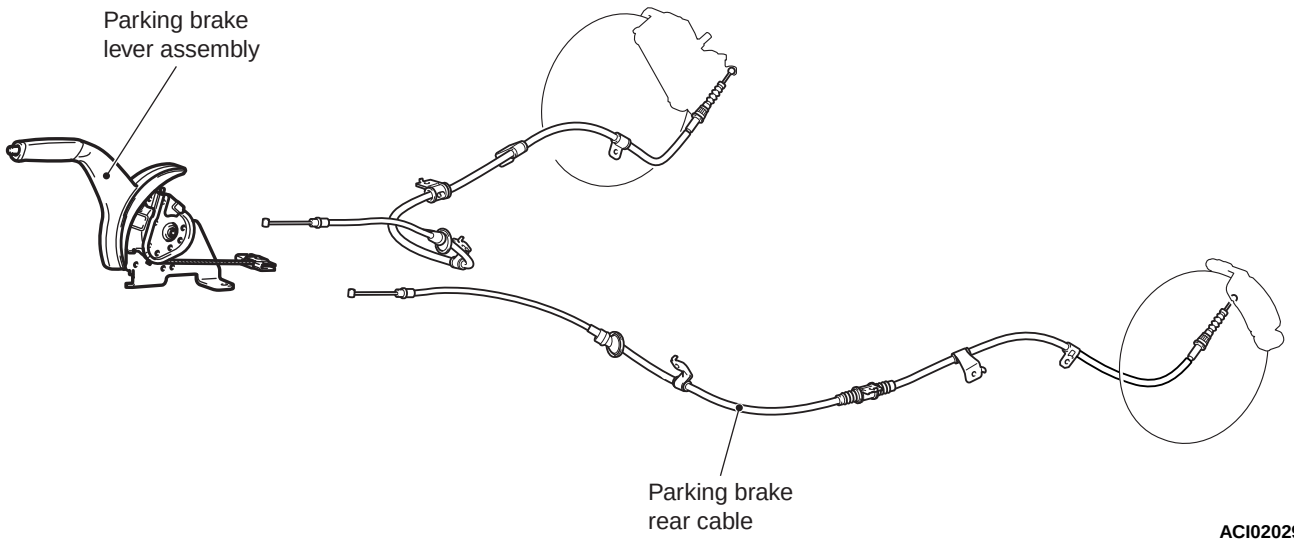

ACI02029 AB

1.1.8. Couplings for trailer brakes (electrical & pneumatic)

M6101010800060

"Not Applicable"

1.1.9. Energy storage reservoir pressure tank

M6101010900067

"Not Applicable"

1.1.11. Rigid brake pipes

M6101011100064

"Not Applicable"

1.1.12. Flexible brake hoses

M6101011200061

"Not Applicable"

1.1.13. Brake linings and pads

M6101000200067

BRAKE PAD CHECK <FRONT>

⚠ CAUTION

If there is a significant difference in thickness between the brake pads at right and left, check the sliding area and the run-out of the brake disc .

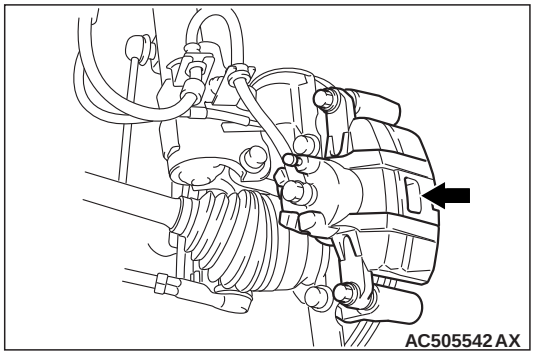

1. Visually check the thickness of brake pad from the inspection hole of the caliper body.
   Standard value: 10.0 mm
   Limit: 2.0 mm
2. If the brake pad thickness is less than the limit value, replace the brake pad.

<REAR>

⚠ CAUTION

If there is a significant difference in thickness between the brake pads at right and left, check the sliding area and the run-out of the brake disc .

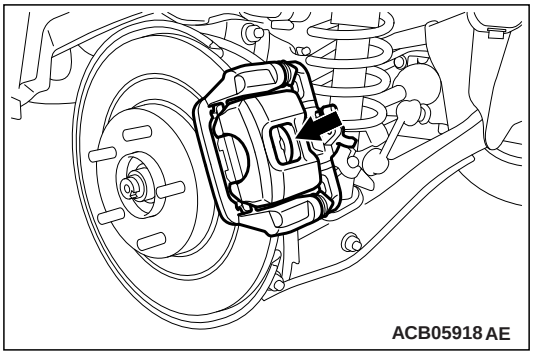

1. Visually check the thickness of brake pad from the inspection hole of the caliper body.
   Standard value: 9.0 mm
   Limit: 1.5 mm
2. If the brake pad thickness is less than the limit value, replace the brake pad.

1.1.14. Brake drums, brake discs

M6101000300086

BRAKE DISC CHECK

BRAKE DISC THICKNESS CHECK

1. Remove contaminants or corrosion from the brake disc surface.

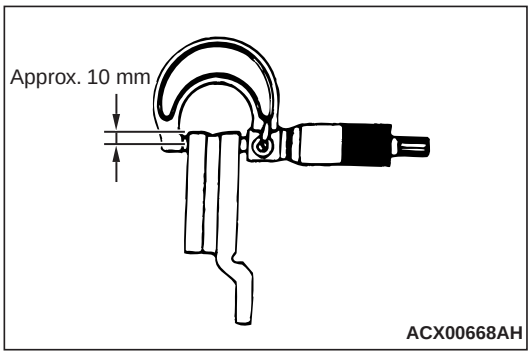

2. Use a micrometer to measure the brake disc thickness at minimum eight points which are 10 mm inward from its circumference.
   Standard value:
   26.0 mm <Front>
   10.0 mm <Rear>
   Limit:
   24.4 mm <Front>
   8.4 mm <Rear>
3. If the brake disc thickness is worn beyond the limit value at more than one point, replace the brake disc and check its run-out.

BRAKE DISC THICKNESS UNEVENNESS CHECK AND CORRECTION

1. Remove contaminants or corrosion from the brake disc surface.

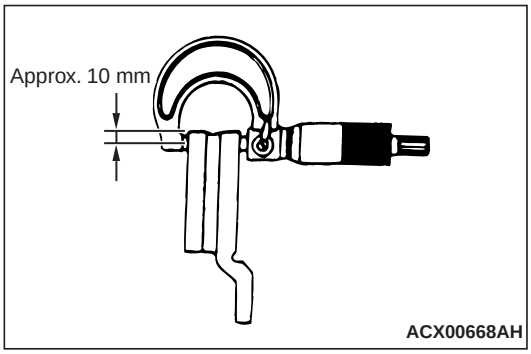

2. Use a micrometer to measure the brake disc thickness at minimum eight points which are 10 mm inward from its circumference. Then record the measurements.
3. If the brake disc thickness unevenness (the difference between the maximum and minimum values measured above) is 0.015 mm or less, it is within the standard value.
4. If the brake disc thickness unevenness exceeds the standard value, grind it according to the procedure below while it is mounted on the vehicle.

   NOTE: If it is suspected that the brake disc thickness will become less than the limit value after the grinding, replace the brake disc and check its run-out.

   (1) Check for wheel bearing looseness in the axial direction.

⚠ CAUTION

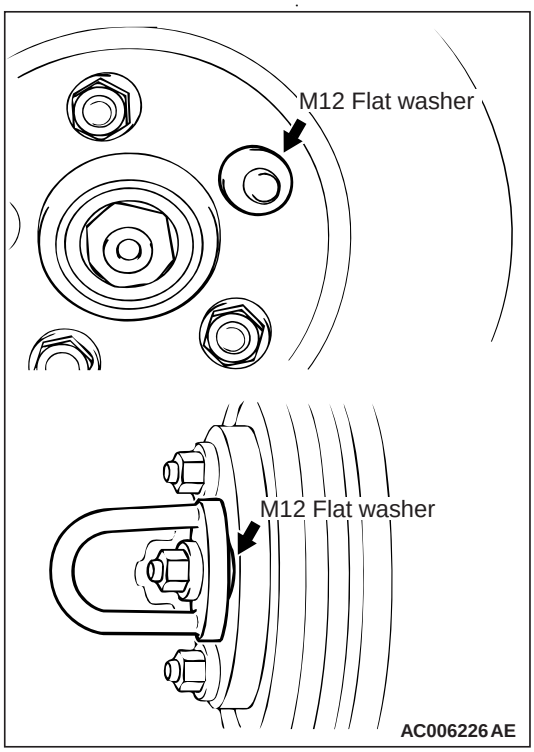

Insert M12 plain washer and then install the adapter as shown before grinding. Failure to use the M12 plain washer will cause the brake disc to be deformed and ground incorrectly.

- **To grind the brake disc, ensure that all the nuts (M12 X 1.5) are tightened evenly and in a diagonal sequence to the specified torque (100 N·m). Failure to use all the nuts (M12×1.5), excessive or uneven tightening torque will cause the brake disc to deform or judder.**

   (2) Correct the brake disc uneven thickness by grinding it while in place on the vehicle.

BRAKE DISC RUN-OUT CHECK AND CORRECTION

1. Check for wheel bearing looseness in the axial direction.
2. If the axial play is within the limit value, secure the brake disc by tightening the nut (M12×1.5) evenly to the specified torque (100 N·m).If the axial play still exceeds the limit value, replace the wheel bearing. Then secure the brake disc by tightening the nut (M12×1.5) evenly to the specified torque (100 N·m).

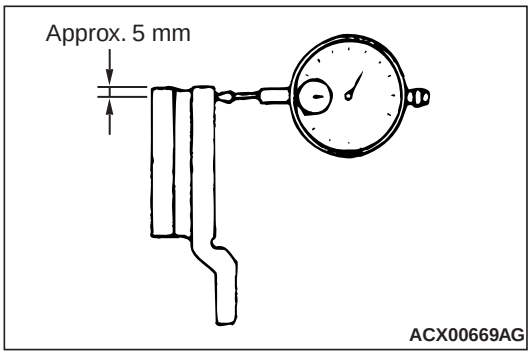

3. Place a dial gauge ca. 5 mm inward from the circumference of the brake disc to measure its run-out.

   Limit:
   0.06 mm <Front>
   0.08 mm <Rear>

4. If the brake disc run-out exceeds the limit value, rephase the brake disc to the hub so that the minimum brake disc run-out is obtained.

⚠ CAUTION

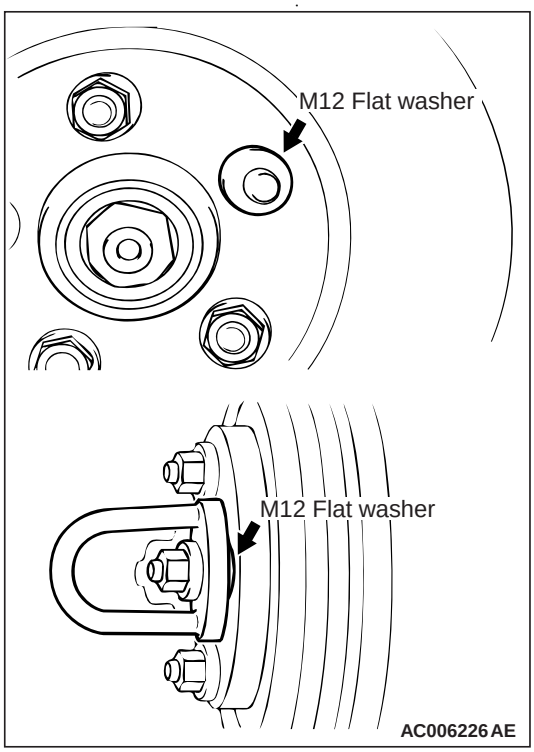

Insert M12 plain washer and then install the adapter as shown before grinding. Failure to use the M12 plain washer will cause the brake disc to be deformed and ground incorrectly.

- **To grind the brake disc, ensure that all the nuts (M12 X 1.5) are tightened evenly and in a diagonal sequence to the specified torque (100 N·m). Failure to use all the nuts (M12×1.5), excessive or uneven tightening torque will cause the brake disc to deform or judder.**

5. If the brake disc run-out exceeds the limit value after rephasing, grind the disc while in place on the vehicle so that the brake disc run-out is within the limit value.

   NOTE: If it is suspected that the brake disc thickness will be below the limit value, replace the brake disc.Then rephase the brake disc so that the minimum brake disc run-out is obtained, or grind the disc while in place on the vehicle so that its run-out is below the limit value.

1.1.15. Brake cables, rods, levers, linkages

M6101011500062

"Not Applicable"

1.1.16. Brake actuators (including spring brakes or hydraulic cylinders)

M6101011600069

"Not Applicable"

1.1.17. Load sensing valve

M6101011700066

"Not Applicable"

1.1.18. Slack adjusters and indicators

M6101011800063

"Not Applicable"

1.1.19. Endurance braking system (where fitted or required)

M6101011900060

"Not Applicable"

1.1.20. Automatic operation of trailer brakes

M6101012000060

"Not Applicable"

1.1.22. Test connections (where fitted or required)

M6101012200064

"Not Applicable"

1.1.23. Overrun brake

M6101012300061

"Not Applicable"

1.2 Service braking performance and efficiency

1.2.1. Performance

M6102000100063

BRAKE DRAG FORCE CHECK

1. Remove the brake pad, shim and clip.

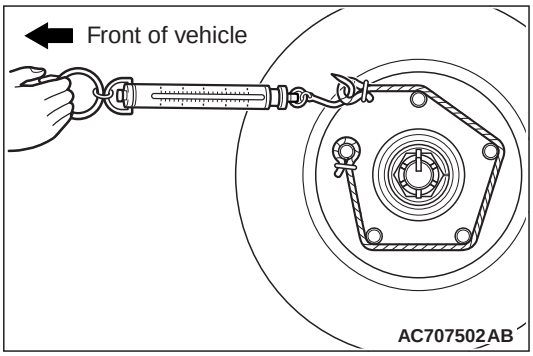

2. Using a spring balance, measure the hub sliding torque in the forward direction with the brake pad, shim and clip removed.
3. Install the brake pad, shim and clip.
4. Start the engine, and depress the brake pedal lightly two or three times. Then stop the engine. (Depressing force: approximately 50 – 100 N)
5. Turn the brake disc 10 times in the forward direction.
6. Using a spring scale, measure the hub sliding torque in the forward direction with the brake pad, shim and clip installed.
7. Obtain the disc brake drag force (difference between measured values of item 2 and item 6).

   Standard value: 68 N or less
8. If the brake drag force exceeds the standard value, disassemble the brake caliper assembly to check for fouling/rust on the piston sliding section and piston seal deterioration, and confirm whether the guide pin and lock pin slide properly.

1.2.2. Efficiency

M6102010200061

"Not Applicable"

1.3. Secondary (emergency) braking performance and efficiency (if met by separate system)

1.3.1. Performance

M6103000100066

The FCM has the same system as the basic brake.
(Refer to 1.2.1. Performance P.1-6)

1.3.2. Efficiency

M6103010100067

"Not Applicable"

1.4. Parking braking performance and efficiency

1.4.1. Performance

M6104000100070

BRAKE DRAG FORCE CHECK

1. Remove the brake pad, shim and clip.

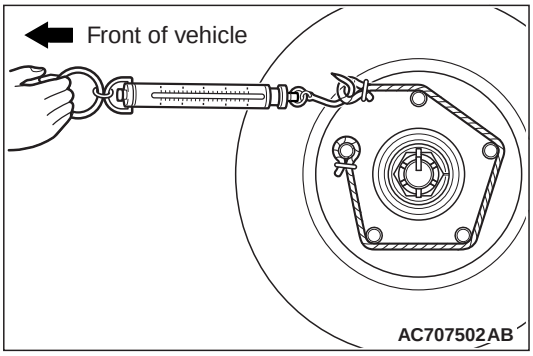

2. Using a spring balance, measure the hub sliding torque in the forward direction with the brake pad, shim and clip removed.
3. Install the brake pad, shim and clip.
4. Start the engine, and depress the brake pedal lightly two or three times. Then stop the engine. (Depressing force: approximately 50 – 100 N)
5. Turn the brake disc 10 times in the forward direction.
6. Using a spring scale, measure the hub sliding torque in the forward direction with the brake pad, shim and clip installed.
7. Obtain the disc brake drag force (difference between measured values of item 2 and item 6).

   Standard value: 68 N or less
8. If the brake drag force exceeds the standard value, disassemble the brake caliper assembly to check for fouling/rust on the piston sliding section and piston seal deterioration, and confirm whether the guide pin and lock pin slide properly.

1.4.2. Efficiency

M6104010200067

"Not Applicable"

1.5. Endurance braking system performance

M6104500000067

"Not Applicable"

1.6. Anti-lock braking system (ABS)

M6105000000065

ABS WARNING LAMP AND BRAKE WARNING LAMP CHECK

Check that ABS and brake warning lamps illuminate as follows.

NOTE: The EBD warning lamp is also used as the brake warning lamp.

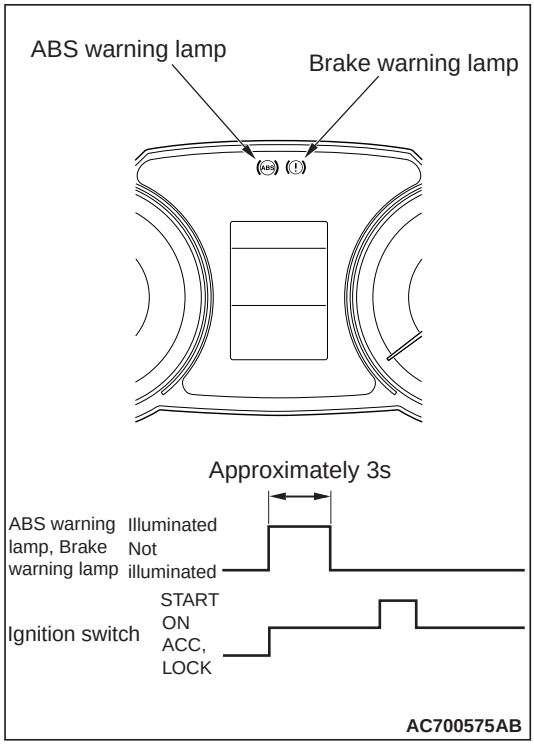

1. When the ignition switch is turned to the ON position, ABS and brake warning lamps illuminate.
2. The ABS and brake warning lamps illuminate for three seconds[*1] and then turn OFF[*2].
3. Otherwise, check the diagnosis code.

NOTE:

- *[*1]: The ABS warning lamp may stay ON until the vehicle speed reaches 10 km/h. As far as ABS-ECU stores any diagnosis code related to the wheel speed sensor malfunction or the motor malfunction as past trouble, ABS-ECU continues illuminating the ABS warning lamp until it verifies that the malfunction for that code is resolved (startup check).*
- *[*2]: The brake warning lamp does not turn OFF when the parking brake is applied or the brake fluid level is lowered.*

1.7 Electronic brake system (EBS)

M6106000000068

"Query raised for this content"

1.8 Brake fluid

M6107000000061

"Not Applicable"

GROUP 2

STEERING

CONTENTS

2.1. MECHANICAL CONDITION 2-2
2.1.1. Steering gear condition 2-2
2.1.2. Steering gear casing attachment . . . 2-2
2.1.3. Steering linkage condition 2-2
2.1.4. Steering linkage operation 2-2
2.1.5. Power steering 2-2

2.2. STEERING WHEEL, COLUMN AND HANDLE BAR 2-2
2.2.1. Steering wheel/handle bar condition . 2-2
2.2.2. Steering column/yokes and forks and steering dampers 2-2

2.3. STEERING PLAY 2-2

2.4. WHEEL ALIGNMENT (X)2 2-2

2.5. TRAILER STEERED AXLE TURNTABLE 2-2

2.6. ELECTRONIC POWER STEERING (EPS) 2-3

2.1. Mechanical condition

2.1.1. Steering gear condition

M6111000100061

"Not Applicable"

2.1.2. Steering gear casing attachment

M6111010200069

"Not Applicable"

2.1.3. Steering linkage condition

M6111010300066

"Not Applicable"

2.1.4. Steering linkage operation

M6111010400063

"Not Applicable"

2.1.5. Power steering

M6111010500060

"Not Applicable"

2.2. Steering wheel, column and handle bar

2.2.1. Steering wheel/handle bar condition

M6110110100066

"Not Applicable"

2.2.2. Steering column/yokes and forks and steering dampers

M6110110200063

"Not Applicable"

2.3. Steering play

M6110300000062

"Not Applicable"

2.4. Wheel alignment (X)2

M6110400000069

"Not Applicable"

2.5. Trailer steered axle turntable

M6110500000066

"Not Applicable"

2.6. Electronic Power Steering (EPS)

M6110600000063

CONSTRUCTION DIAGRAM

<LHD>

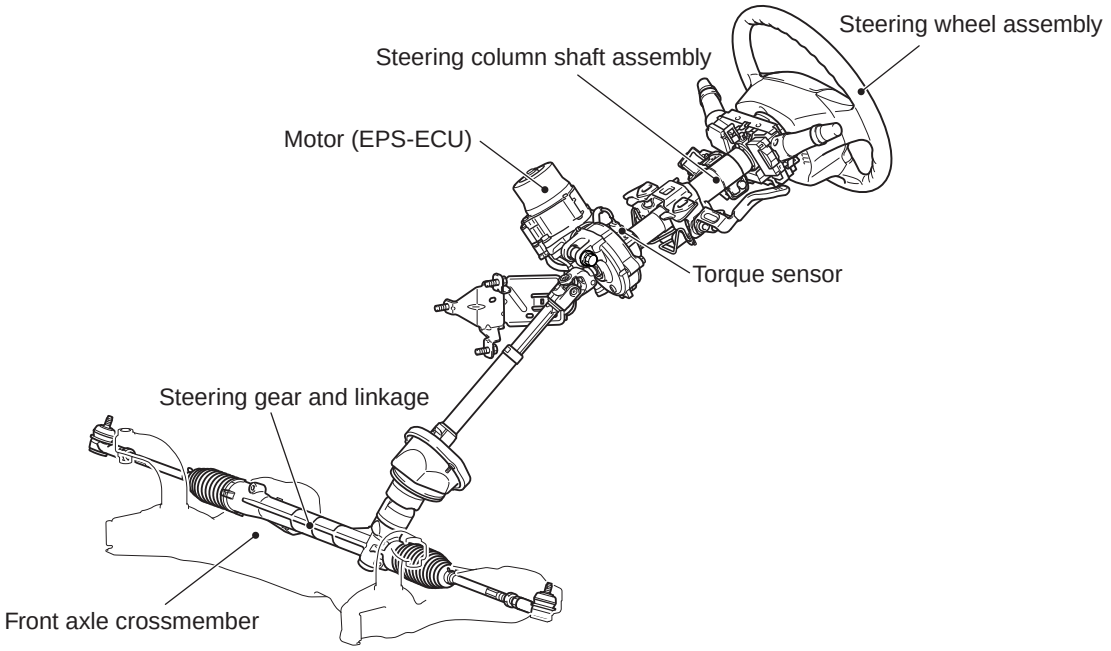

ACE03917**AB**

<RHD>

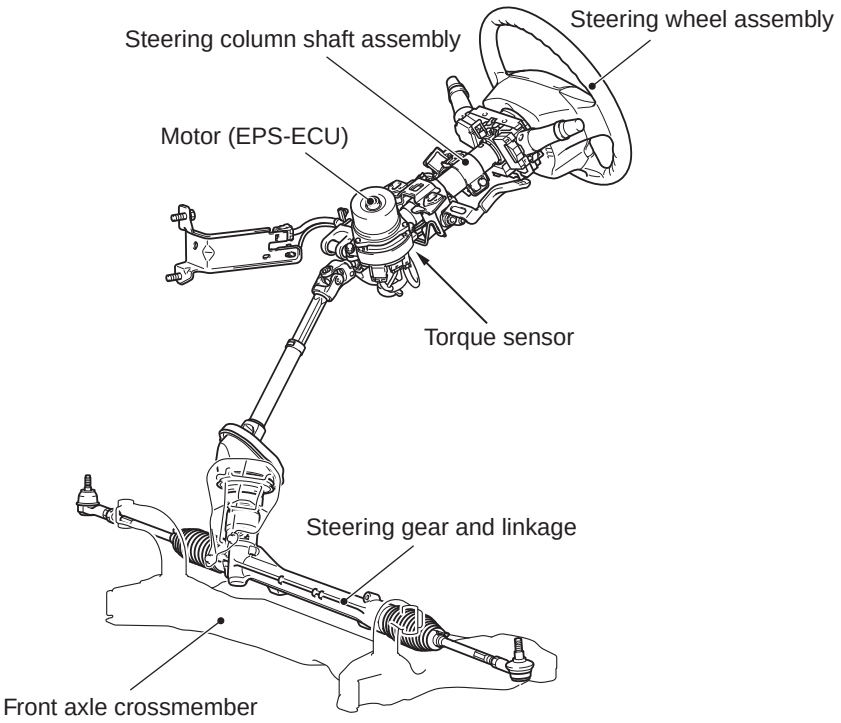

ACE03918 **AB**

GENERAL SPECIFICATIONS

Item		Specification
Steering wheel	Type	3-spoke type
	Outside diameter mm	375
	Maximum number of turns	3.3
Power steering type		Electrical powered type
Steering gear	Type	Rack and pinion type
	Stroke ratio (Rack stroke/Steering wheel maximum number of turns) mm/rev	43.69
	Rack stroke mm	144
Motor	Type	Permanent magnetic field type
	Rated voltage (V)	DC12
	Rated current Arms	82
Torque Sensor	Type	Noncontact type hole IC type
EPS-ECU	Control type	Microcomputer control (32 bit)
	Rated voltage (V)	DC12

CHECK OF ELECTRIC POWER STEERING WARNING DISPLAY

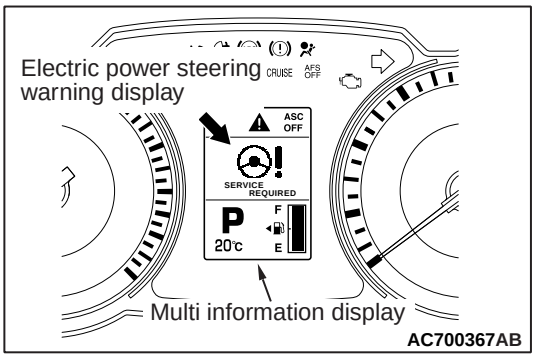

1. If the display does not operate, the electric power steering system or the combination meter may be defective. Check for diagnosis code, and carry out diagnosis. If no diagnosis codes are set, carry out diagnosis by referring to the electric power steering warning display-related inspection items on the trouble symptom chart.

CHECK STEERING LINKAGE FOR DAMAGE AND LOOSE CONNECTIONS (INCLUDING SEALS AND BOOTS)

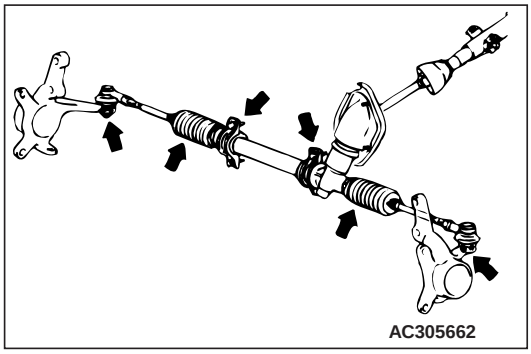

1. Move the steering wheel bit by bit to the left or right, and check to be sure that there is no play or looseness in the linkage coupling, that the installation is not loose, and that the rod or arm is not bent or damaged.

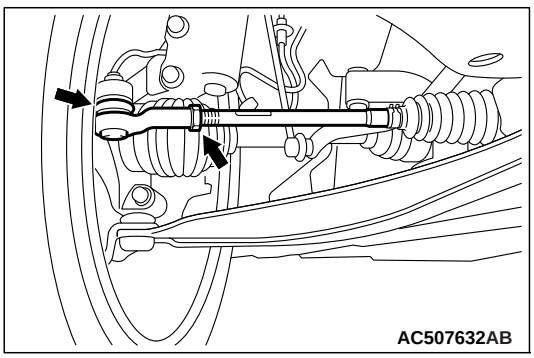

2. Check to be sure that the seal and boot of the ball joint are correctly installed (in the correct position), and that they are not damaged.
3. Check tie-rod end lock nut for looseness. If lock nut is loose, adjust toe-in and then tighten lock nut to the specified torque.

Tightening torque: 52 ± 2 N·m

GROUP 3

VISIBILITY

CONTENTS

3.1. FIELD OF VISION 3-2
3.2. CONDITION OF GLASS 3-2
3.3. REAR-VIEW MIRRORS OR DEVICES 3-2
3.4. WINDSCREEN WIPERS 3-2
3.5. WINDSCREEN WASHERS 3-2
3.6. DEMISTING SYSTEM (X)2 3-2

3.1. Field of vision

M6121100000062

"Not Applicable"

3.2. Condition of glass

M6121200000069

"Not Applicable"

3.3. Rear-view mirrors or devices

M6121300000066

"Not Applicable"

3.4. Windscreen wipers

M6121400000063

"Not Applicable"

3.5. Windscreen washers

M6121500000060

"Not Applicable"

3.6. Demisting system (X)2

M6121600000067

"Not Applicable"

GROUP 4

LAMPS, REFLECTORS AND ELECTRICAL EQUIPMENT

CONTENTS

4.1. HEADLAMPS 4-3
- 4.1.1. Condition and operation 4-3
- 4.1.2. Alignment 4-4
- 4.1.3. Switching 4-6
- 4.1.4. Compliance with requirements1 4-7
- 4.1.5. Levelling devices (where mandatory) 4-7
- 4.1.6. Headlamp cleaning device (where mandatory) 4-12

4.2. FRONT AND REAR POSITION LAMPS, SIDE MARKER LAMPS, END OUTLINE MARKER LAMPS AND DAYTIME RUNNING LAMPS 4-13
- 4.2.1. Condition and operation 4-13
- 4.2.2. Switching 4-14
- 4.2.3. Compliance with requirements1 4-14

4.3. STOP LAMPS 4-14
- 4.3.1. Condition and operation 4-14
- 4.3.2. Switching 4-14
- 4.3.3. Compliance with requirements1 4-19

4.4. DIRECTION INDICATOR AND HAZARD WARNING LAMPS 4-20
- 4.4.1. Condition and operation 4-20
- 4.4.2. Switching 4-20
- 4.4.3. Compliance with requirements1 4-20
- 4.4.4. Flashing frequency 4-20

4.5. FRONT AND REAR FOG LAMPS 4-20
- 4.5.1. Condition and operation 4-20
- 4.5.2. Alignment (X)2 4-20
- 4.5.3. Switching 4-20
- 4.5.4. Compliance with requirements1 4-20

4.6. REVERSING LAMPS 4-20
- 4.6.1. Condition and operation 4-20
- 4.6.2. Compliance with requirements1 4-20
- 4.6.3. Switching 4-20

4.7. REAR REGISTRATION PLATE LAMP 4-21
- 4.7.1. Condition and operation 4-21
- 4.7.2. Compliance with requirements1 4-21

4.8. RETRO-REFLECTORS, CONSPICUITY (RETRO REFLECTING) MARKINGS AND REAR MARKING PLATES 4-21
- 4.8.1. Condition 4-21
- 4.8.2. Compliance with requirements1 4-21

4.9. TELL-TALES MANDATORY FOR LIGHTING EQUIPMENT 4-21
- 4.9.1. Condition and operation 4-21
- 4.9.2. Compliance with requirements1 4-21

4.10. ELECTRICAL CONNECTIONS

BETWEEN TOWING VEHICLE AND TRAILER OR SEMI-TRAILER 4-21

4.11.ELECTRICAL WIRING. 4-21

4.12. NON OBLIGATORY LAMPS AND RETRO-REFLECTORS (X)2. 4-22

4.13. BATTERY(IES) 4-23

4.1. Headlamps

4.1.1. Condition and operation

M6131000100063

Construction diagram

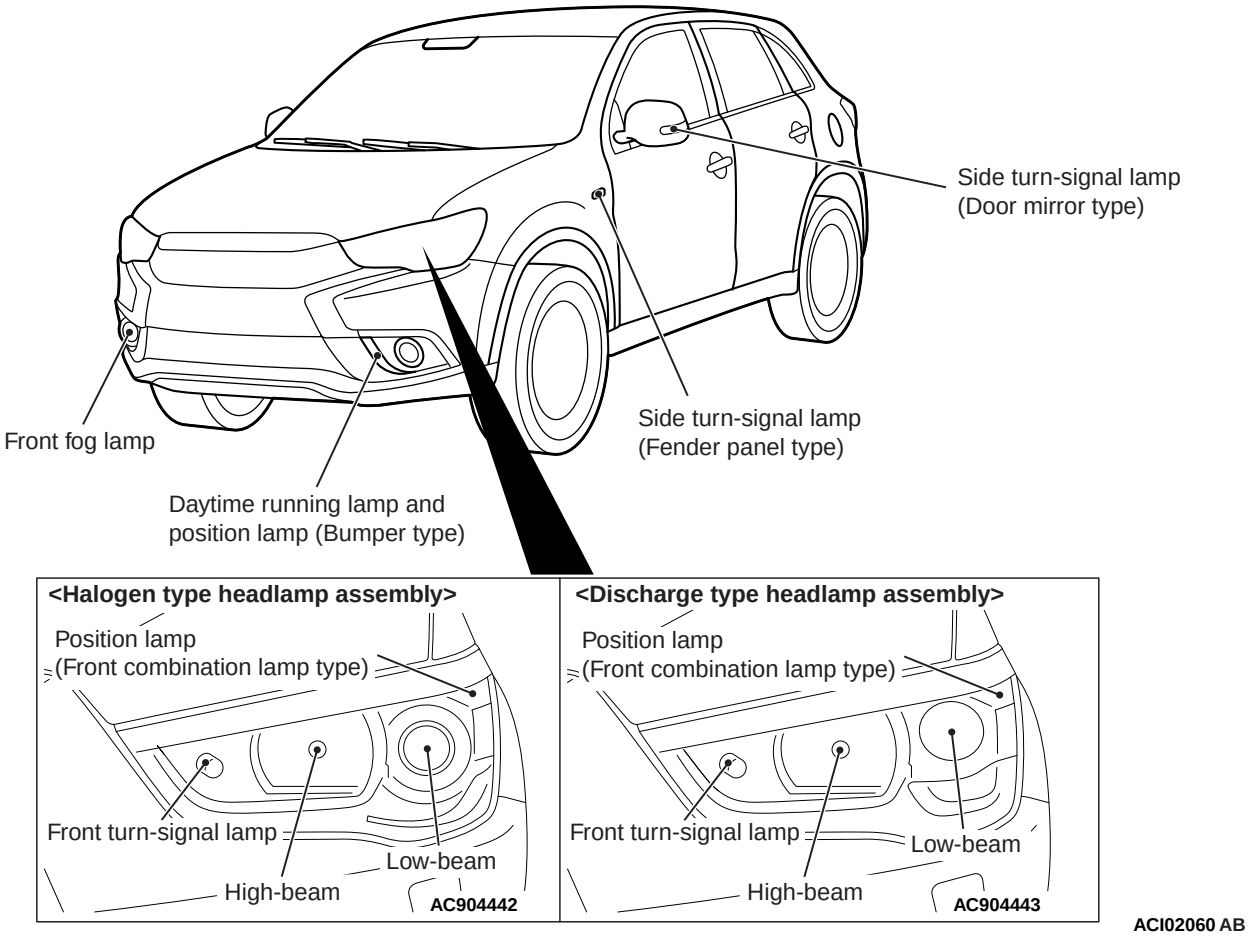

ACI02060 AB

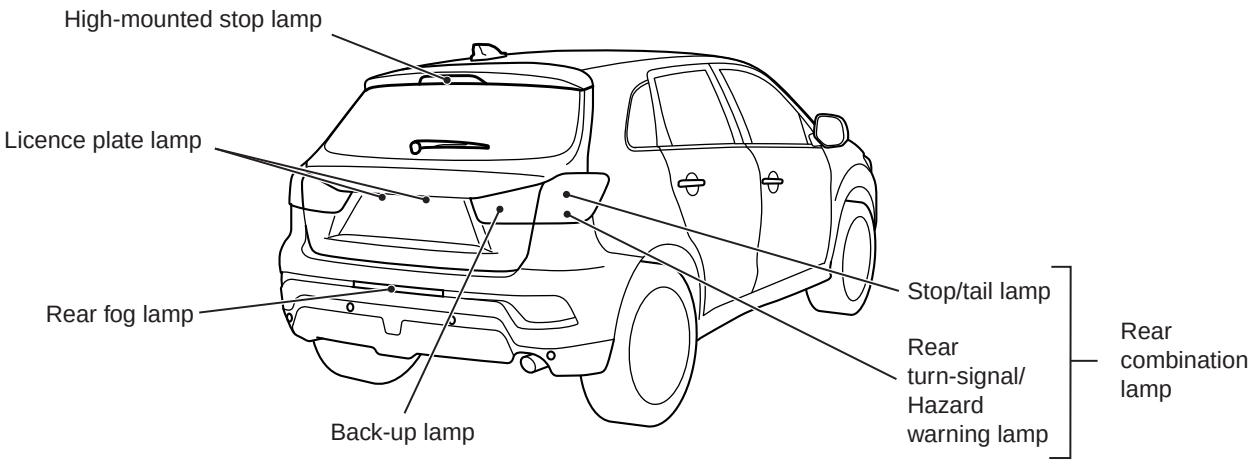

ACI02061AB

4.1.2. Alignment

M6131000200060

<USING A BEAM SETTING EQUIPMENT>

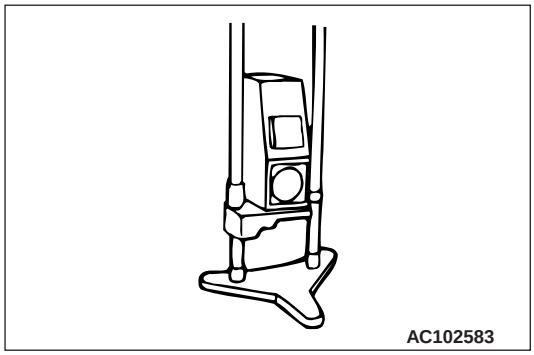
AC102583

1. The headlamps should be aimed with the proper beam setting equipment, and in accordance with the equipment manufacture's instructions.
2. Alternately turn the adjusting screw to adjust the headlamp aiming.

<USING A SCREEN> (LOW-BEAM)

PRE-AIMING INSTRUCTION

1. Inspect for badly rusted or faulty headlamp assemblies.
2. These conditions must be corrected before a satisfactory adjustment can be made.
3. Inspect tyre inflation, and adjust if it is necessary.
4. If the fuel tank is not filled up, put weight in the luggage compartment to make up for the fuel shortage so that the weight will become 90% of full-state weight or heavier. (0.8 kg per litter)
5. There should be no other load in the vehicle other than driver or substituted weight of approximately 75 kg placed in driver's position.
6. Turn the headlamp levelling switch to the switch position "0." <Vehicles with headlamp manual levelling system>
7. Change the vehicle posture, and then operate the actuator of headlamp levelling unit once. <Vehicles with headlamp automatic levelling system>
8. Thoroughly clean the headlamp lenses.

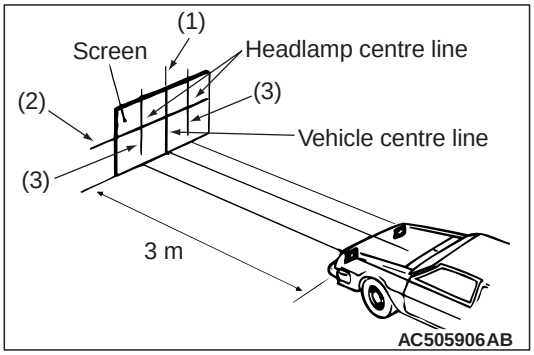

AC505906AB

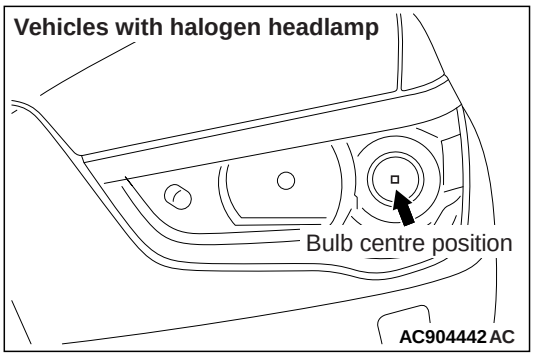

AC904442AC

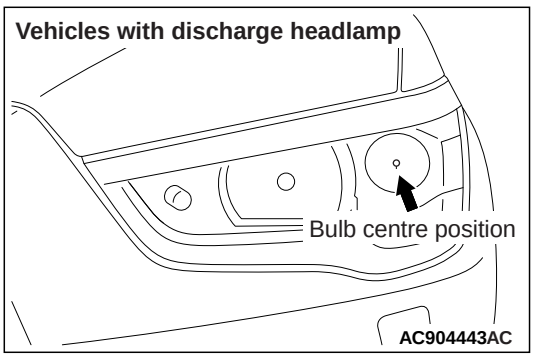

AC904443AC

9. Place the vehicle on a level floor, perpendicular to a flat screen 3 m away from the bulb centre position of the low-beam.
10. Rock vehicle sideways to allow vehicle to assume its normal position.
11. To correct for distortion of the suspension, rock the bumpers on the front/rear side of the vehicle up and down three times alternately.
12. Run the engine at a speed of 2,000 r/min to charge the battery.
13. Four lines of adhesive tape (or equivalent markings) are required on screen or wall:
    (1) Position a vertical tape or mark so that it is aligned with the vehicle centre line.
    (2) Measure the distance from the bulb centre position to the floor. Transfer the measurement to the screen. Horizontal tape or mark on the screen is for reference of vertical adjustment.

(3) Measure the distance from the centre line of the vehicle to the centre of each headlamp. Transfer the measurement to the screen. Vertical tape or mark on the screen with reference to the centre line of each headlamp bulb.

HEADLAMP ADJUSTMENT

⚠ CAUTION

- **Do not cover a headlamp for more than three minutes to prevent the plastic headlamp lens deformation.**
- **Be sure to adjust the aiming adjustment screw in the tightening direction.**

1. The low-beam headlamp should project on the screen upper edge of the beam (cut-off).

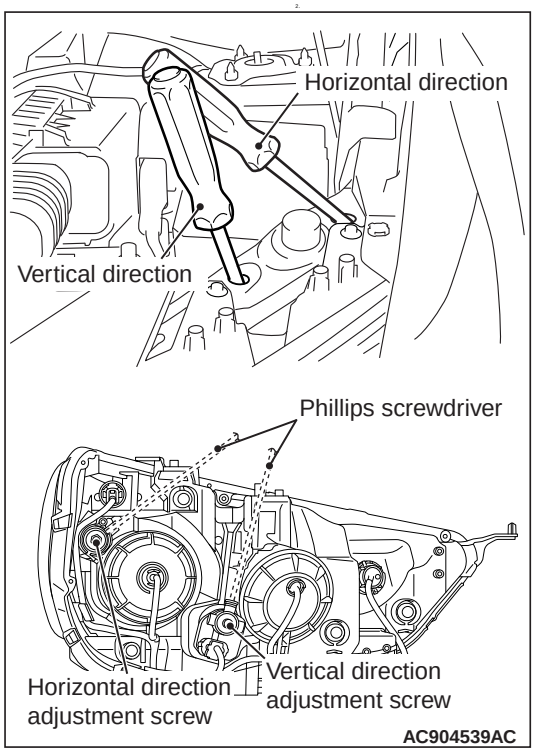

If not the case, turn the adjusting screws to achieve the specified low-beam cut-off location on the aiming screen.

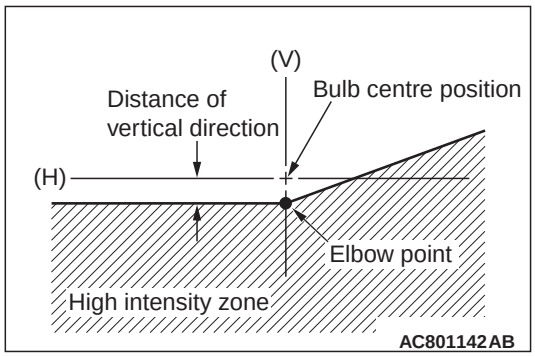

Standard value:
Vertical direction; 36 mm (0.69°) below horizontal (H)
Horizontal direction; Elbow point intersects the vertical line (V)

Limit:
Vertical direction; ±15 mm (±0.29°) from the horizontal cut-off line
Horizontal direction; ± 26 mm (± 0.5°) from the vertical line (V)

NOTE: The illustration shows LH drive vehicles. For RH drive vehicles, it is symmetrical.

4.1.3. Switching

M6131000300067

Headlamps

NOTE:

- *When entering a country in which vehicles are driven on the opposite side of the road to the country in which your vehicles is supplied, necessary measures have to be taken to avoid dazzling oncoming traffic.However, headlamps on this vehicle do not need any adjustment.*
- *Do not leave the lights on for a long time while the engine is stationary (not running) .A rundown battery could result.*
- *When it rains, or when the vehicle has been washed, the inside of the lens sometimes becomes foggy, but this does not indicate a functional problem.When the lamp is switched on, the heat will remove the fog.However, if water gathers inside the lamp, we recommend you to have checked.*
- *The bulbs of high intensity discharge headlamps (if so equipped) have the following characteristics.*
  - *While the headlamps are used, the light will gradually become a bluish-white colour.*
  - *The life of a bulb becomes shorter as it is repeatedly turned on and off.When the bulb approaches the end of its life, the brightness may decrease, the bulb may flicker, and the light may become reddish in colour.*
- *If this occurs, have the vehicle inspected at a MITSUBISHI MOTORS Authorised Service Point.*

Type1

Rotate the switch to turn on the lamps.

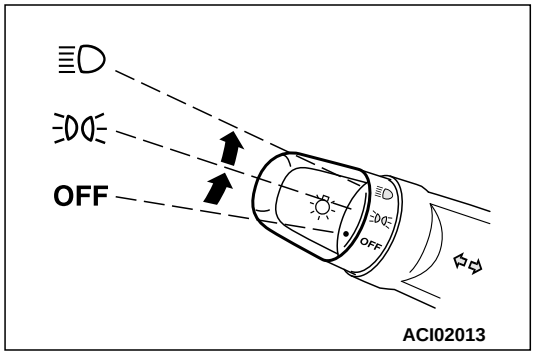

OFF	All lamps off
	Position, tail, licence plate and instrument panel lamps on
	Headlamps and other lamps go on

The daytime running lamps come on when the engine is running and the lamp switch is in the "OFF" position and the tail lamps are off.

NOTE:

- *If the lamp switch is in the "position, tail, licence plate and instrument panel lamps on"or "headlamps and other lamps go on" position, the daytime running lamps come on as position lamps.*

Type2

Rotate the switch to turn on the lamps.

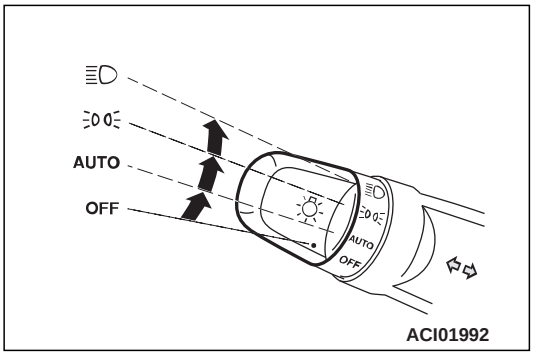

OFF	All lamps off
AUTO	With the ignition switch or the operation mode is in ON, headlamps, position, tail, licence plate, and instrument panel lamps turn on and off automatically in accordance with outside light level.All lamps turn off automatically when the ignition switch is turned to "LOCK" position or the operation mode is put in OFF.
	Position, tail, licence plate and instrument panel lamps on
	Headlamps and other lamps go on

The daytime running lamps come on when the engine is running and the lamp switch is in the "OFF" or "AUTO" position and the tail lamps are off.

NOTE:

- *If the lamp switch is in the "position, tail, licence plate and instrument panel lamps on"or "headlamps and other lamps go on" position, or if the tail lamps are on when the lamp switch is in the "AUTO" position, the daytime running lamps come on as position lamps.*

NOTE:

- *On vehicles with the rain sensor, the sensitivity of the automatic on/off control can be adjusted. For further information, contact a MITSUBISHI MOTORS Authorized Service Point.*
- *When the headlamps are turned off by the automatic on/off control with the ignition switch in the "ON" position, the front fog lamps (if so equipped) and rear fog lamps also go off.When the headlamps are subsequently turned back on by the automatic on/off control, the front fog lamps also come on but the rear fog lamp stay off.If you wish to turn the rear fog lamp back on, operate the switch again.*

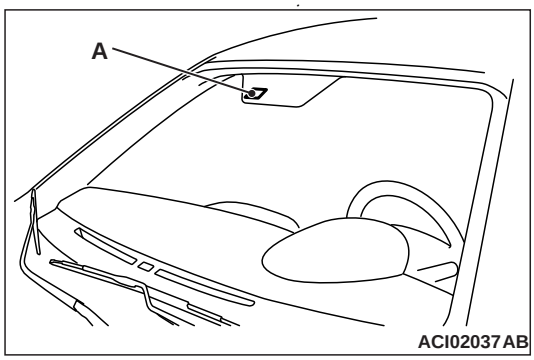

Do not place anything on the automatic light sensor (A) , and do not clean with a glass cleaner.

- *If the lamps do not turn on or off with the switch in the "AUTO" position, manually operate the switch and we recommend you to have your vehicle checked.*

4.1.4. Compliance with requirements1.

M6131000400064

"Not Applicable"

4.1.5. Levelling devices (where mandatory)

M6131000500061

Headlamp manual levelling system

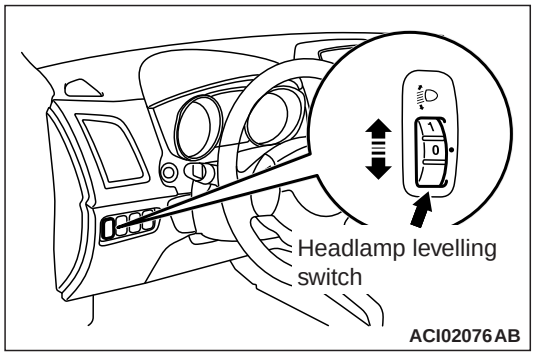

The beam direction of the headlamps changes according to the number of passengers and the amount of load. The headlamp manual levelling function is a system that allows the driver to change the direction of headlamp beam so that the drivers of oncoming cars are not dazzled by the headlamps. The headlamp levelling switch allows changing the direction in five steps: 0 to 4.

Relationship between the switch positions and the number of passengers/loads

Passenger and load	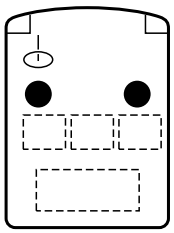 AC607611	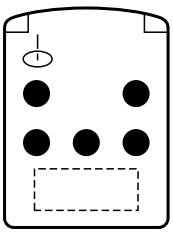 AC607612	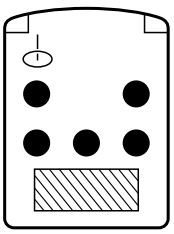 AC607613	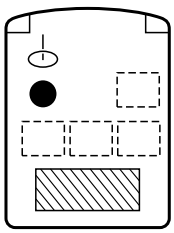 AC607614
	One or two passengers	Five passengers	Five passengers and heavy loads	Driver and heavy loads
Switch position	0	1	2 or 3	4

NOTE: Each switch position is for reference. In each switch position, when the headlamp beam is too high, turn the switch to one-level higher position.

Operation

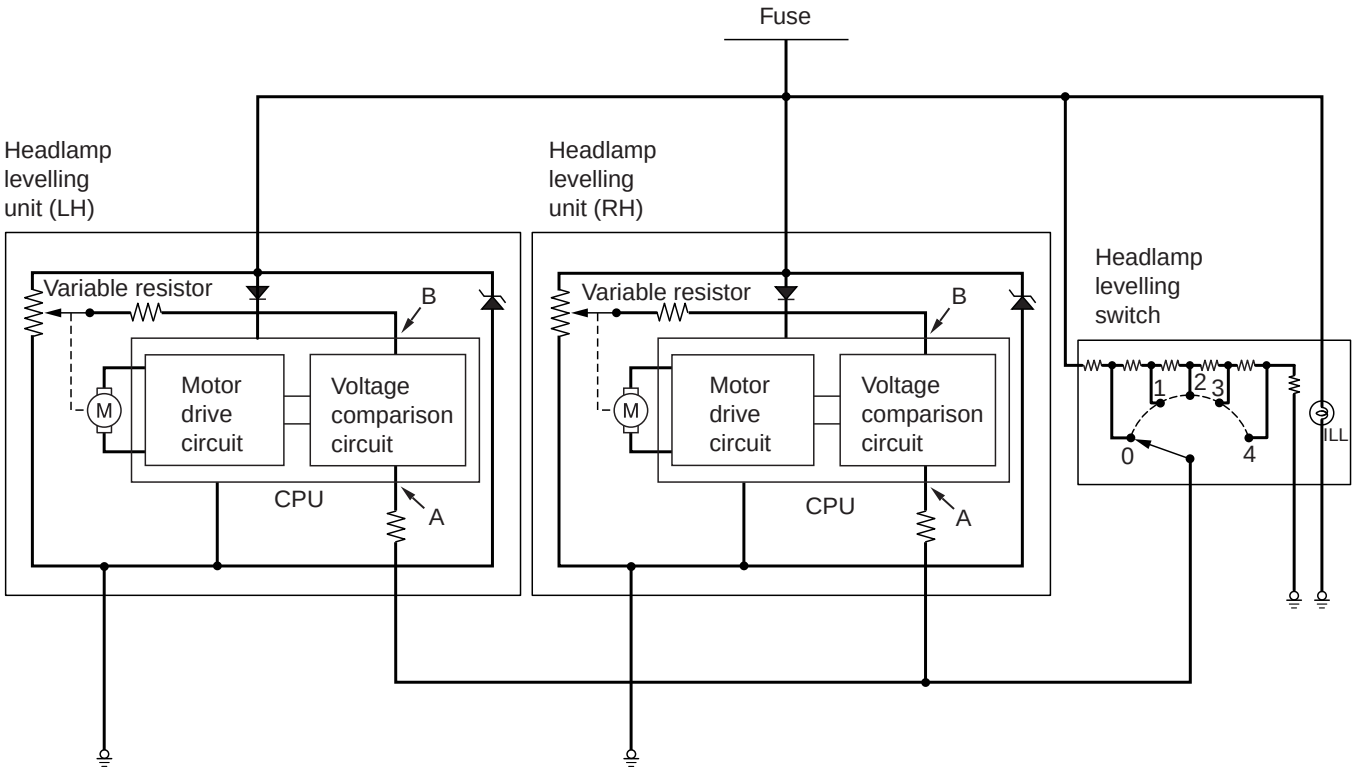

AC314086AB

1. The headlamp levelling switch increases the resistance as it is turned from 0 to 4. Turning the headlamp levelling switch changes the voltage at point A. When the headlamp levelling switch is turned from 0 to 4, the voltage at point A decreases. Upon detection of this voltage change, the headlamp levelling unit turns the motor to lower the beam direction. At this time, the resistance of the variable resistor in the headlamp assembly changes, and the voltage at point B decreases gradually. When the voltages at points A and B become equal, the headlamp levelling unit stops the motor.
2. Turning the headlamp levelling switch from 4 to 0 increases the voltage at point A, and then the headlamp levelling unit turns the motor in the direction opposite to that mentioned in Item 1, increasing the voltage at point B. When the voltages at points A and B become equal, the headlamp levelling unit stops the motor.

3. The headlamp levelling unit detects voltage changes caused by headlamp levelling switch operation, and turns the motor to change the directions of the headlamp reflectors for the adjustment of the headlamp beam direction.

Headlamp automatic levelling system

The beam direction of the headlamps (vertical angle) changes according to the number of passengers and the amount of load. The headlamp automatic levelling system is a system that automatically controls the beam direction of headlamps (up and down angle) when parking or travelling with stable vehicle attitude so that the drivers of oncoming cars and of cars driving in front are not dazzled by the headlamp beam that is directed upwards.

Operational Description

The beam direction of headlamps is automatically controlled according to driving conditions as described in the table below.

Vehicle condition	Control content
When parking	When the engine is stopped with the headlamp (low-beam) ON or when the vehicle is stopped with the headlamp (low-beam) ON and the accelerator pedal is released, the ETACS-ECU controls the beam direction according to the height sensor values of the change in load resulting from getting on/off of passengers or loading/unloading of loads.
When driving at a constant speed	When a vehicle starts on curb, the travelling vehicle posture changes from the posture during parking, so that the beam direction changes. To control the improper beam direction caused by such vehicle attitude change, the ETACS-ECU controls the beam direction while travelling with stable vehicle attitude. This beam direction control while travelling with stable vehicle attitude is performed only once between a vehicle stop and the next stop. When driving is started on a gravel or rough road, the beam direction control is activated after the vehicle attitude becomes stable on a paved road.

System component and function

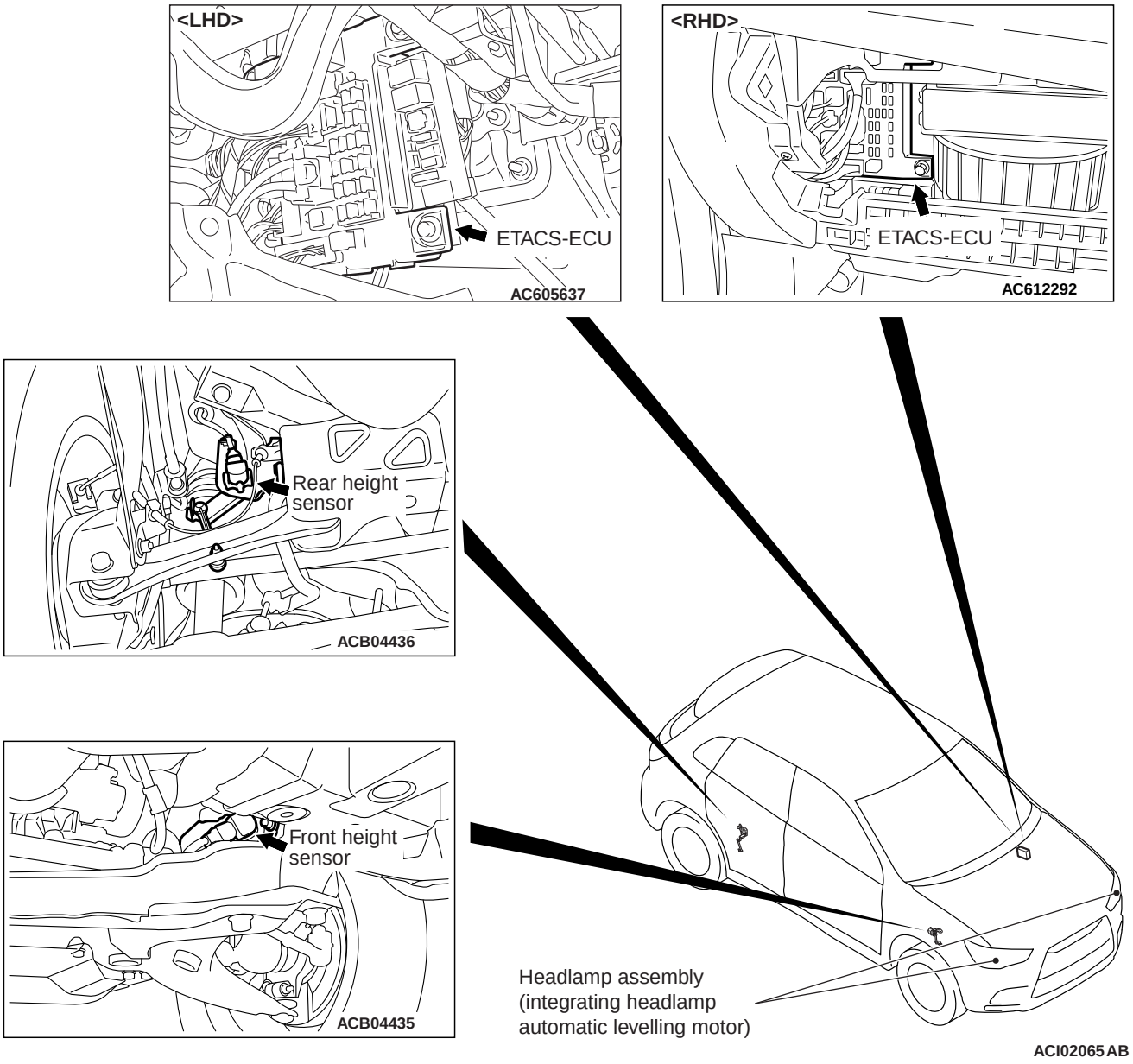

Parts name	Functional description
Ignition switch	Supplies power to the ETACS-ECU when the ignition switch is in the ON position.
Height sensor (front)	Detects the elongation/contraction of the front suspension and transmits the signal to the ETACS-ECU.
Height sensor (rear)	Detects the elongation/contraction of the rear suspension and transmits the signal to the ETACS-ECU.
Headlamp assembly (integrating headlamp automatic levelling motor)	Drives the headlamp reflector by receiving signals from the ETACS-ECU.
Combination meter	Send an odometer indication value to the ETACS-ECU.
ABS-ECU or ASC-ECU	Transfers the vehicle travel distance information to the ETACS-ECU.

Parts name	Functional description
Engine-ECU	Transfers engine speed signals and accelerator pedal position signals to the ETACS-ECU.
ETACS-ECU	• Transfers lighting switch position signals, all door switch ON/OFF signals, tailgate latch switch ON/OFF signals, hazard warning lamp switch ON/OFF signals, headlamp (low-beam) ON/OFF status signals. • Controls the headlamp automatic levelling motor integrated in the headlamp assembly based on the signals form switches and sensors to control the beam direction according to the vehicle posture.
Diagnosis connector	Outputs diagnosis codes.

System block diagram

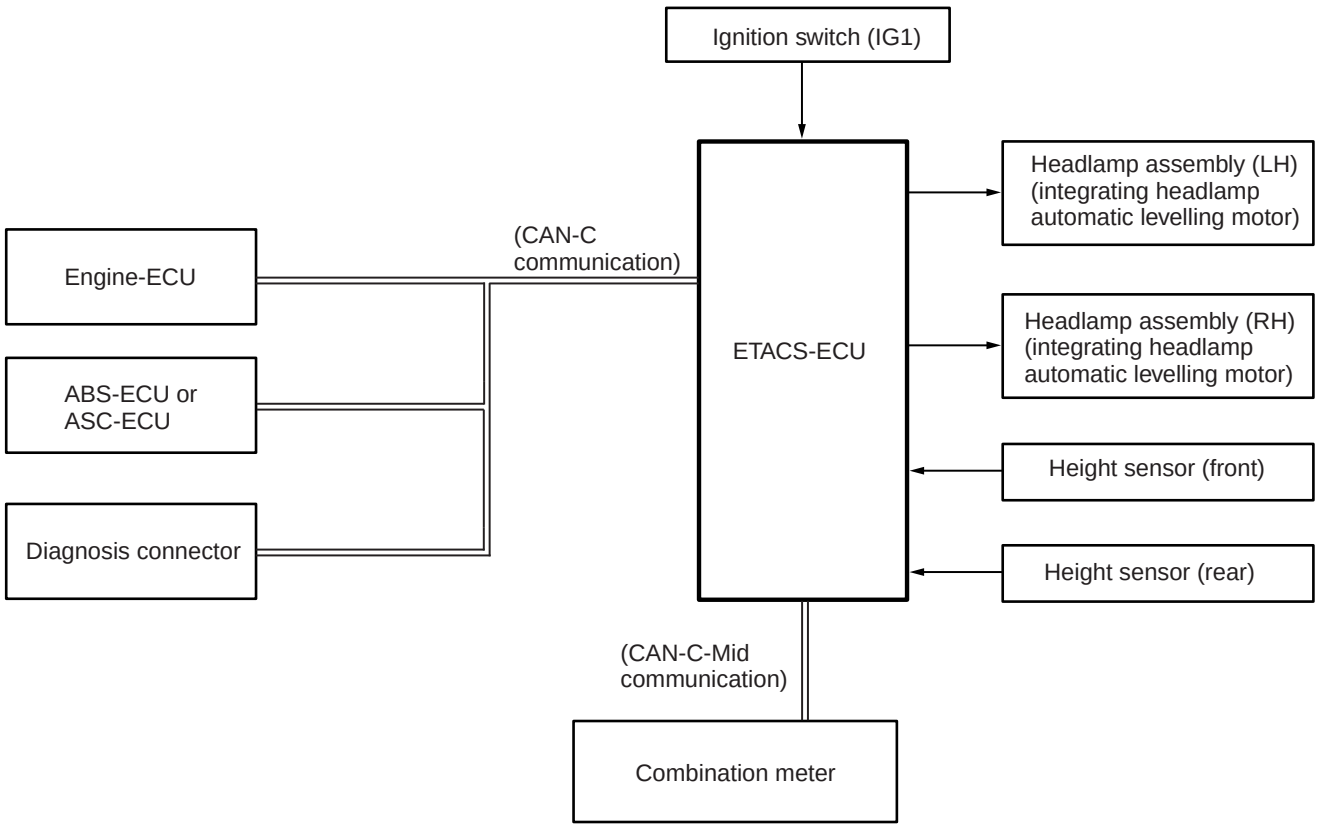

OPERATION CHECK OF HEADLAMP AUTOMATIC LEVELLING

With this inspection, it is simply checked that the headlamp automatic levelling motor incorporated in the headlamp assembly moves in accordance with the vehicle posture.

INSPECTION PROCEDURE

1. Park the vehicle on a level surface.
2. Turn the ignition switch to "ON" position. (Do not start up the engine.)
3. At the front or rear jack up point, raise the front wheels or rear wheels off the earth.
4. Turn ON the headlamp switch.
5. When the front wheels are raised, the upward headlamp beam is controlled with the control value applicable to the present vehicle posture, and the headlamp beam moves downward.
6. When the rear wheels are raised, the downward headlamp beam is controlled with the control value applicable to the present vehicle posture, and the headlamp beam moves upward.

4.1.6. Headlamp cleaning device (where mandatory)

M6131000600068

CONSTRUCTION DIAGRAM

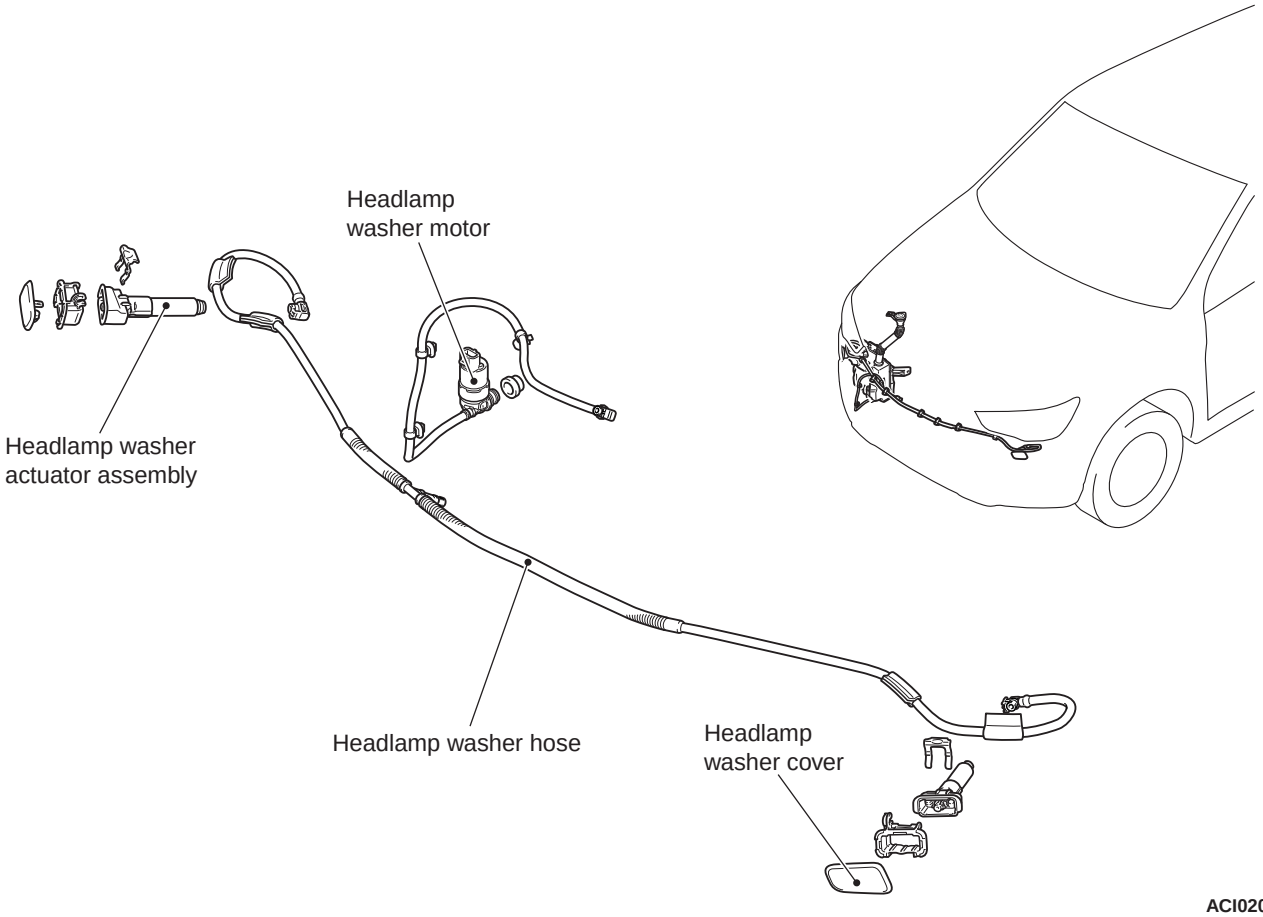

ACI02030 AB

HEADLAMP WASHER MOTOR CHECK

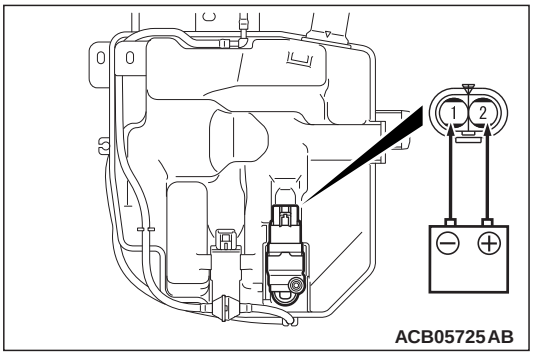

ACB05725 AB

1. Remove the headlamp washer motor connector.
2. Check to see that the water is vigorously sprayed when connecting the positive battery terminal to terminal number 2 and terminal number 1 to the negative battery terminal.

4.2. Front and rear position lamps, side marker lamps, end outline marker lamps and daytime running lamps

4.2.1. Condition and operation

M6132000100066

Construction diagram

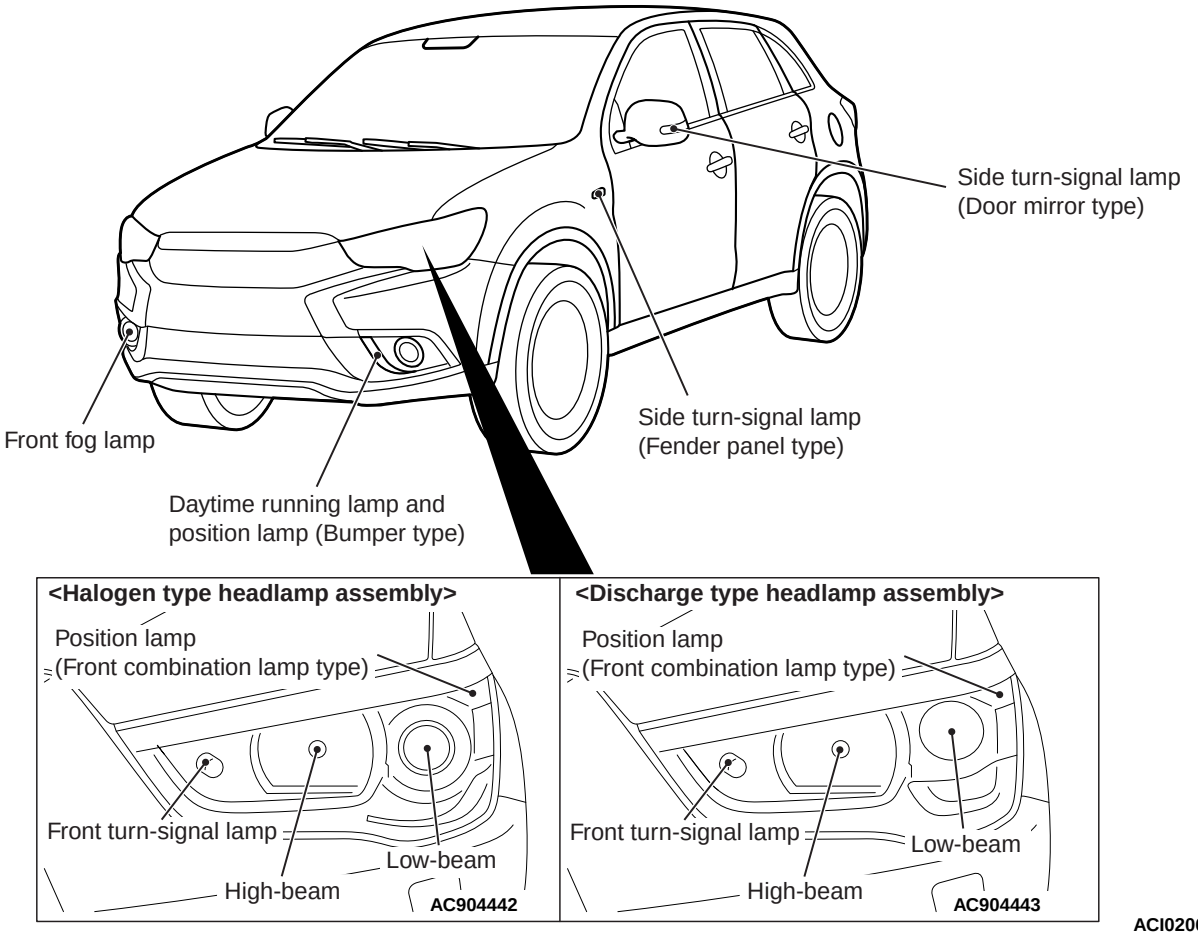

ACI02060 AB

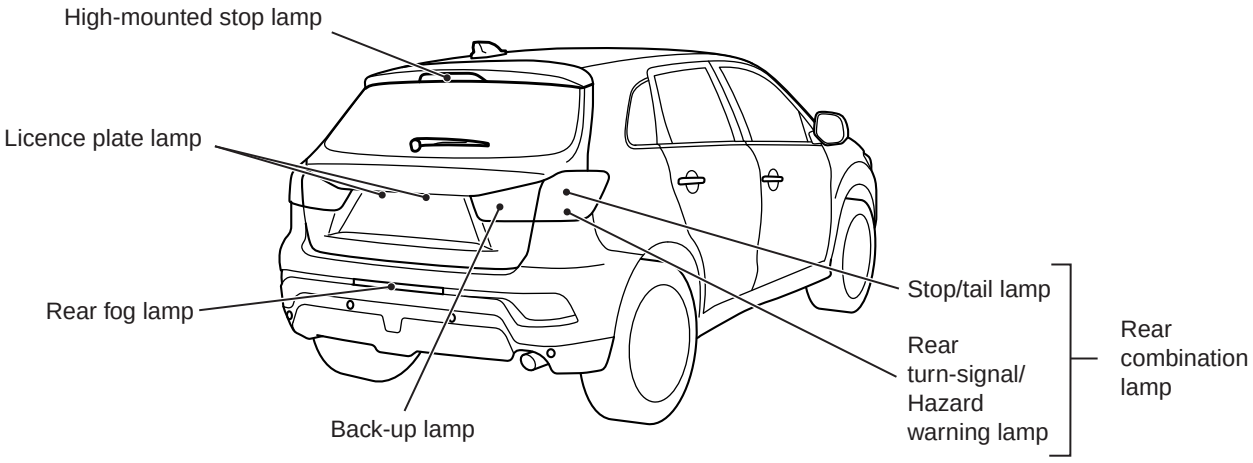

ACI02061AB

4.2.2. Switching

M6132000200063

"Not Applicable"

4.2.3. Compliance with requirements1

M6132000300060

"Not Applicable"

4.3. Stop Lamps

4.3.1. Condition and operation

M6133000100069

"Not Applicable"

4.3.2. Switching

M6133000200066

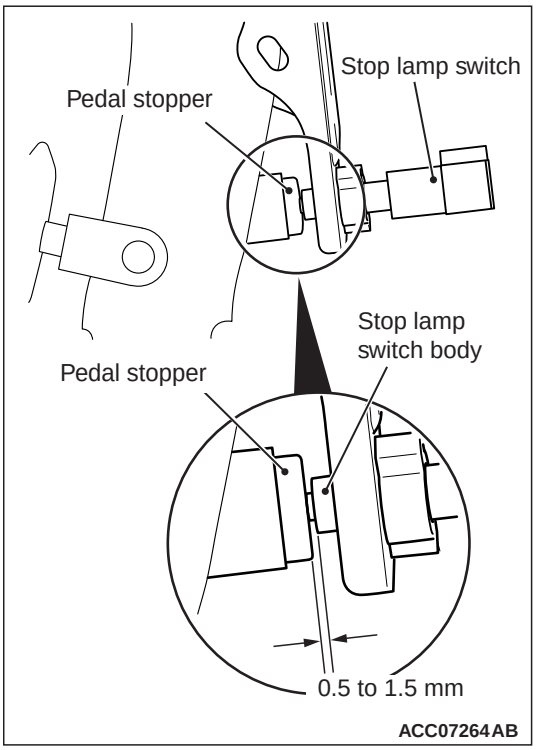

1. Check that the clearance between the stop lamp switch and the pedal stopper is as shown in the figure.

⚠ CAUTION

Make sure that the stop lamp is not illuminated when the brake pedal is not depressed.

STOP LAMP SWITCH CHECK

⚠ CAUTION

Do not apply grease or lubricant to the switch and the switch installation section to avoid malfunction of the switch. In addition, do not use gloves which have grease on them.

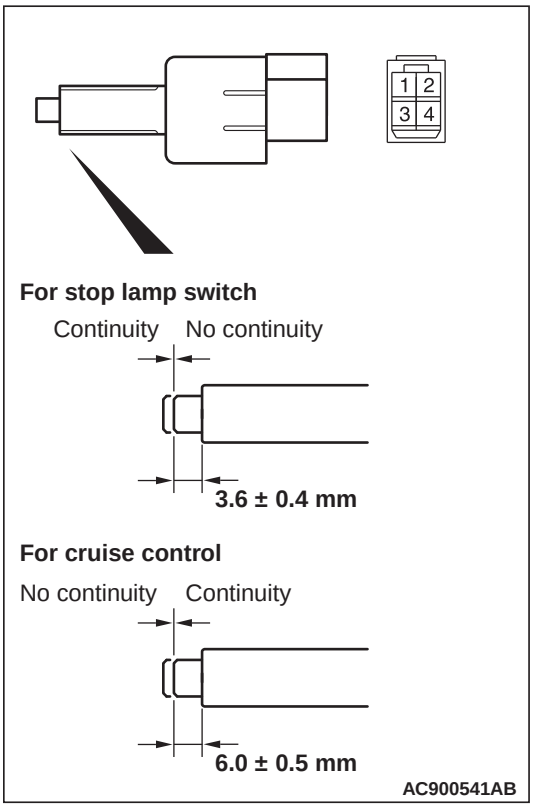

Check for continuity between the terminals of the switch.

Check condition	Terminal connector of tester	Normal condition
At free position	1 – 2 (for stop lamp switch)	Continuity exists (2 Ω or less)
	3 – 4 (for cruise control)	No continuity
Press the plunger from the edge of the outer case by the dimension shown in the figure.	1 – 2 (for stop lamp switch)	No continuity
	3 – 4 (for cruise control)	Continuity exists (2 Ω or less)

FORWARD COLLISION MITIGATION (FCM)

CONSTRUCTION DIAGRAM

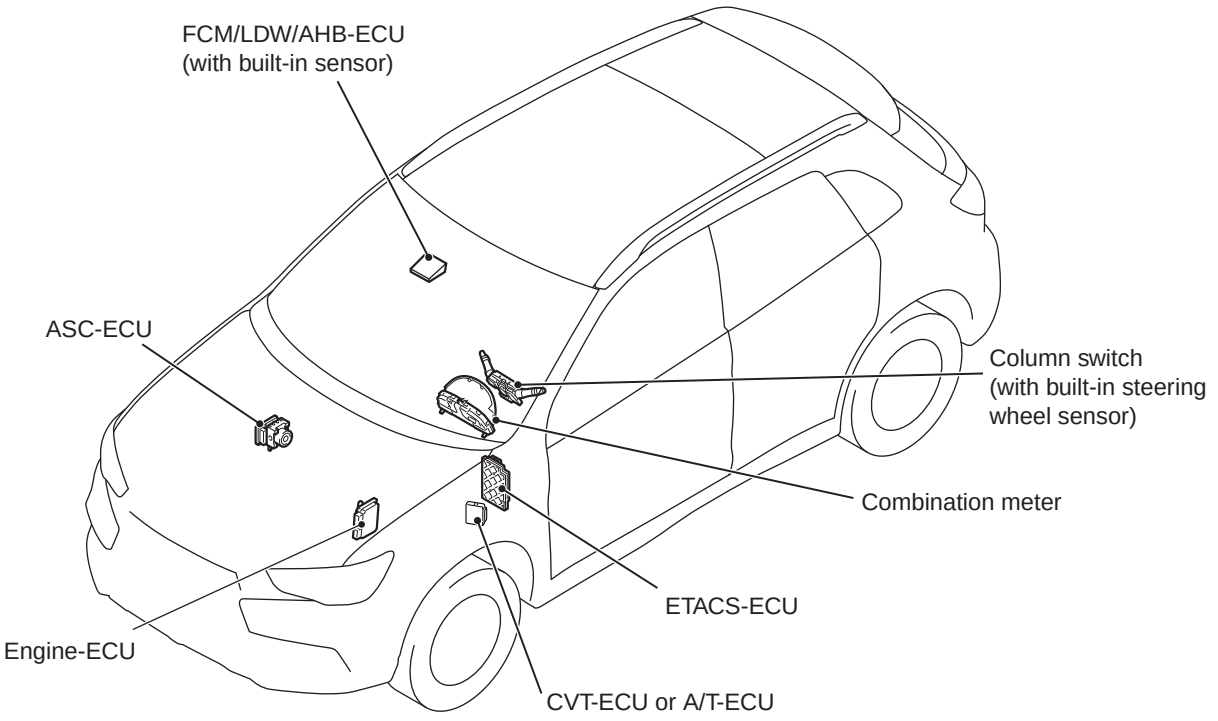

ACH01080AB

Main components and functions

Component name	Functional Description
FCM/LDW/AHB-ECU (with built-in sensor)	• Uses a built-in sensor to recognise a vehicle travelling ahead, a pedestrian, a lane and the headlamp beams which a travelling-ahead or oncoming vehicle casts. • Controls the Forward Collision Mitigation (FCM), the Lane Departure Warning System (LDW) and the automatic high beam system according to the sensor detection and CAN bus communication. • It requests the combination meter to provide status information on the functions and visual warnings via CAN communication. It also requests the ASC-ECU to control the brakes via CAN communication. • Adjusts the axis of the built-in sensor, and detects any blockage or malfunction. • Receives FCM and LDW ON/OFF switch signals to the ECUs.
ASC-ECU	• Controls the brakes according to request signals received from the FCM/LDW/AHB-ECU via CAN communication. • Activates the stop lamps when the automatic braking is triggered. • Requests the engine-ECU to provide "engine braking" effect according to the request from the FCM/LDW/AHB-ECU. • Sends the signals of the FCM and LDW ON/OFF switch to the ECUs via CAN communication.
Engine-ECU	• Sends accelerator pedal position sensor signals to the ECUs via CAN communication. • Controls the engine torque according to request signals received from the ASC-ECU.
CVT-ECU <CVT> or A/T-ECU <A/T>	Informs the ECUs of the selector lever position via CAN communication.
Combination meter	The FCM/LDW/AHB-ECU informs the combination meter of status information and requests it to provide visual warnings. Based on these, the combination meter controls the multi-information display, the indicator lamps, the warning lamps and the buzzer.
ETACS-ECU	• Incorporates the circuit where the ASC-ECU activates the stop lamps when the FCM activates the automatic braking. • Sends LDW switch signals to the ECUs via CAN communication. • Switches high and low beam headlamps according to request signals received from the FCM/LDW/AHB-ECU. • Informs the ECUs of ambient temperature via CAN communication. • Sends stop lamp switch signals to the ECUs via CAN communication.
Column switch (with built-in steering wheel sensor)	Informs the ECUs of a steering wheel angle and angular velocity via CAN communication.

SCHEMATIC DIAGRAM

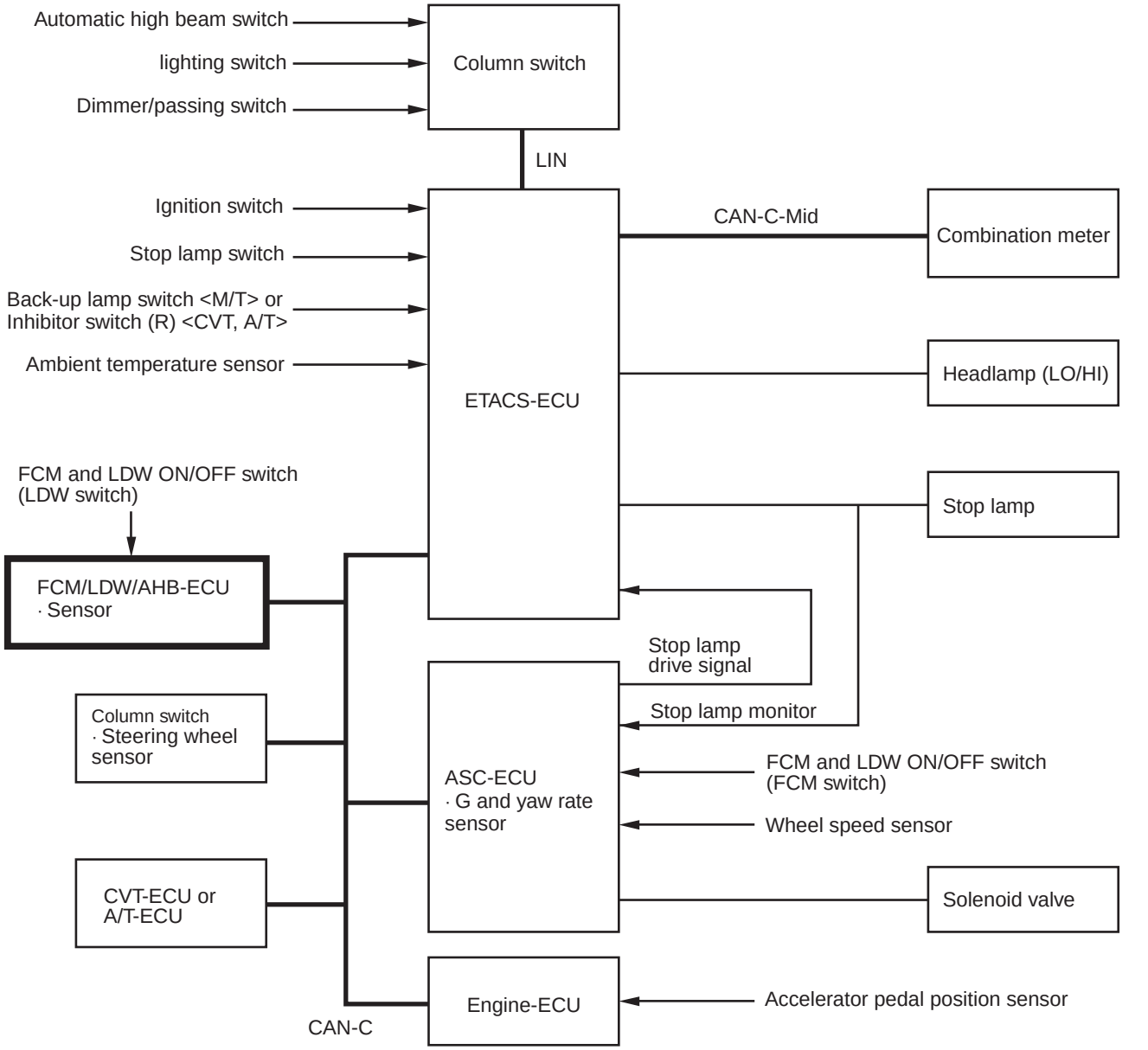

ACH00879AB

Fail-safe and self-diagnosis functions

The FCM/LDW/AHB-ECU constantly monitors the input and output signals. If the system detects a malfunction, it will send a failure signal to the combination meter and prohibit the FCM/LDW/automatic high beam system control under circumstances. The combination meter will provide a visual and audible warning to inform the driver of it. The FCM/LDW/AHB-ECU has the following functions for easier system checks.

- Diagnosis code set
- Service data output
- Freeze frame data output

All the above items can be diagnosed using M.U.T.-III.

Sensor calibration

If the FCM/LDW/AHB-ECU is replaced or removed and installed, calibration the sensor by using the M.U.T.-III.

NOTE: For how to calibration the sensor, refer to the WORKSHOP MANUAL.

Function

The FCM has the following functions:

Function	General
Forward collision warning function	Activate the visible warning on the combination meter and audible warning when the system determines that a forward collision is imminent.
Forward collision mitigation brake system prefill	Increases the brake fluid pressure in advance to enhance the response during the driver's braking operation when the system determines that a forward collision is imminent.
Forward collision mitigation brake assist	Advances the brake assist timing when the system determines that a forward collision is imminent.
Forward collision mitigation brake	Activates the automatic emergency braking to reduce the vehicle speed when the system determines that a forward collision is not avoidable.
Forward collision mitigation brake for low speed driving	Activates the automatic emergency braking to reduce the vehicle speed when the system determines that a forward collision is imminent when the vehicle is being driven at 30 km/h or less. Stops the vehicle to avoid the collision under certain circumstances.

Function

The FCM has the following functions:

Function	General
Forward collision warning function	Activate the visible warning on the combination meter and audible warning when the system determines that a forward collision is imminent.
Forward collision mitigation brake system prefill	Increases the brake fluid pressure in advance to enhance the response during the driver's braking operation when the system determines that a forward collision is imminent.
Forward collision mitigation brake assist	Advances the brake assist timing when the system determines that a forward collision is imminent.
Forward collision mitigation brake	Activates the automatic emergency braking to reduce the vehicle speed when the system determines that a forward collision is not avoidable.

Operation

The system calculates the distance and the relative velocity between the vehicle travelling ahead or a pedestrian and your vehicle by using a sensor. If the system determines that a straightforward collision is imminent, it will avoid or reduce the injury or damage due to the collision by performing the controls shown in the table below:

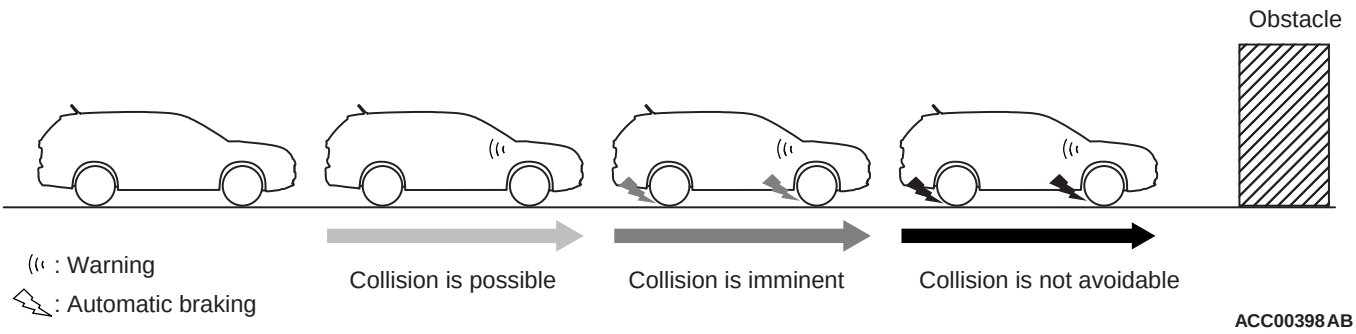

Control		Collision is possible	Collision is imminent	Collision is not avoidable
Forward collision warning function	Buzzer	Sounds	Sounds	Sounds
Forward collision mitigation brake system prefill		Increase the brake fluid pressure.	–	–
Forward collision mitigation brake assist		Assists the braking force in accordance with the driver's brake operation.	Assists the braking force in accordance with the driver's brake operation.	Assists the braking force in accordance with the driver's brake operation.
Forward collision mitigation brake*		–	Weak automatic-braking	Strong automatic-braking

*NOTE: *: If two seconds elapse after the forward collision mitigation brake stops the vehicle, it can be deactivated automatically.*

FCM AND LDW ON/OFF SWITCH

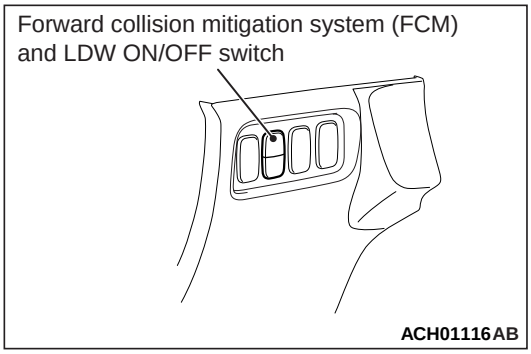

The FCM and LDW ON/OFF switch is installed at the instrument panel left lower side. You can switch the FCM (on and off) and the warning timing ("FAR", "MIDDLE" and "NEAR") by operating this switch.

How to switch on and off the FCM

- The FCM is toggled between on and off when the FCM and LDW ON/OFF switch is pressed and held. When the FCM is toggled, the system will inform the driver of it by the combination meter LCD display*.

*NOTE: *: If the FCM is toggled off, "FCM OFF display" will be shown on the combination meter LCD screen. If the FCM is toggled on, a current warning timing will be shown on the combination meter LCD screen.*

How to switch the FCM warning timing

- The FCM warning timing is toggled when the FCM and LDW ON/OFF switch is pressed briefly with the FCM activated. When the FCM is toggled, the system will inform the driver of it by the combination meter LCD display.

4.3.3. Compliance with requirements1.

M6133000300063

"Not Applicable"

4.4. Direction indicator and hazard warning lamps

4.4.1. Condition and operation

M6134000100062

"Not Applicable"

4.4.2. Switching

M6134000200069

"Not Applicable"

4.4.3. Compliance with requirements1.

M6134000300066

"Not Applicable"

4.4.4. Flashing frequency

M6134000400063

"Not Applicable"

4.5. Front and rear fog lamps

4.5.1. Condition and operation

M6135000100065

"Not Applicable"

4.5.2. Alignment (X)2

M6135000200062

"Not Applicable"

4.5.3. Switching

M6135000300069

"Not Applicable"

4.5.4. Compliance with requirements1.

M6135000400066

"Not Applicable"

4.6. Reversing lamps

4.6.1. Condition and operation

M6136000100068

"Not Applicable"

4.6.2. Compliance with requirements1

M6136000200065

"Not Applicable"

4.6.3. Switching

M6136000300062

"Not Applicable"

4.7. Rear registration plate lamp

4.7.1. Condition and operation

M6137000100061

"Not Applicable"

4.7.2. Compliance with requirements1

M6137000200068

"Not Applicable"

4.8. Retro-reflectors, conspicuity (retro reflecting) markings and rear marking plates

4.8.1. Condition

M6138000100064

"Not Applicable"

4.8.2. Compliance with requirements1

M6138000200061

"Not Applicable"

4.9. Tell-tales mandatory for lighting equipment

4.9.1. Condition and operation

M6139000100067

"Not Applicable"

4.9.2. Compliance with requirements1

M6139000200064

"Not Applicable"

4.10. Electrical connections between towing vehicle and trailer or semi-trailer

M6130100000060

"Not Applicable"

4.11. Electrical wiring

M6131100000063

"Query raised for this content"

4.12. Non obligatory lamps and retro-reflectors (X)2

M6131200000060

Construction diagram

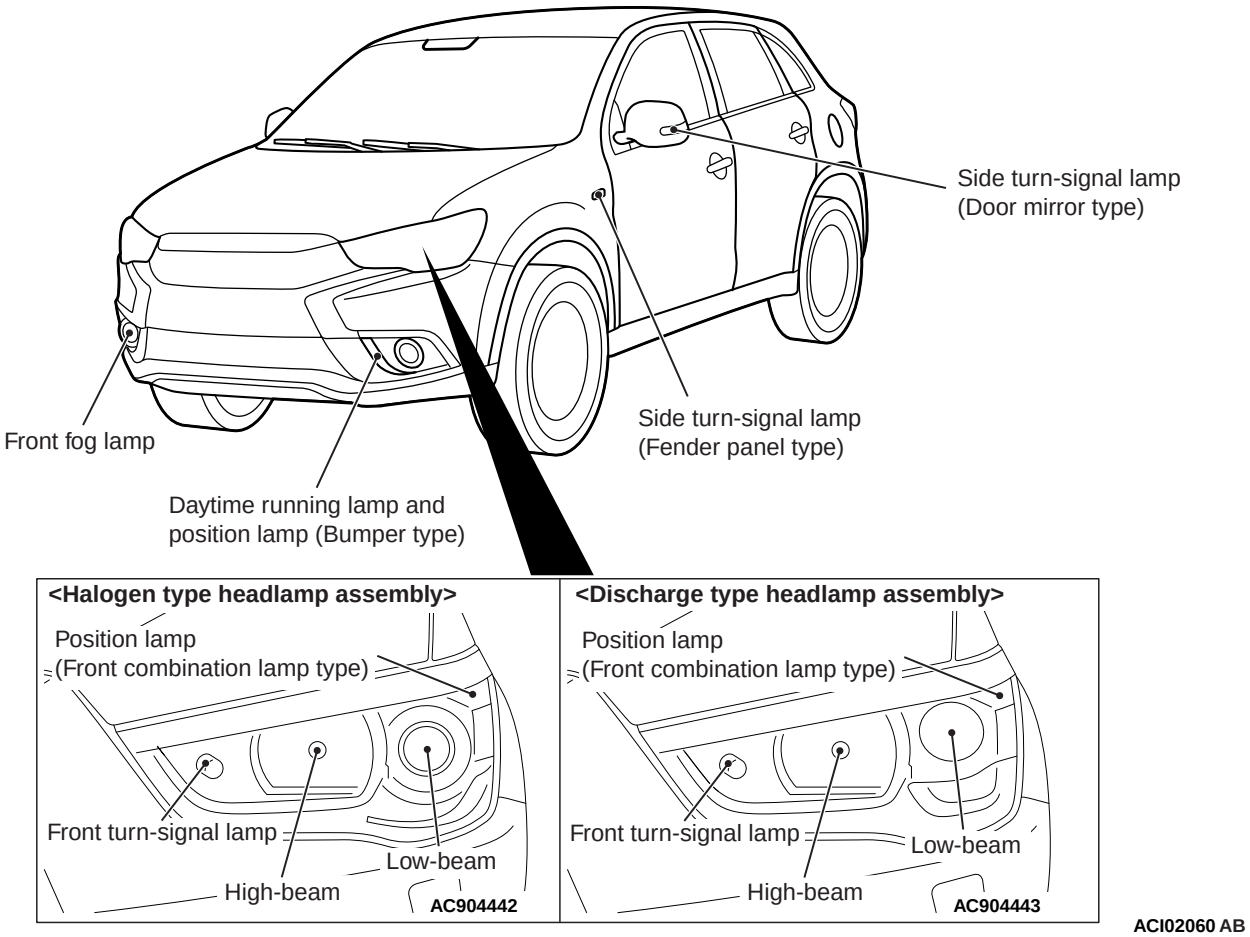

ACI02060 AB

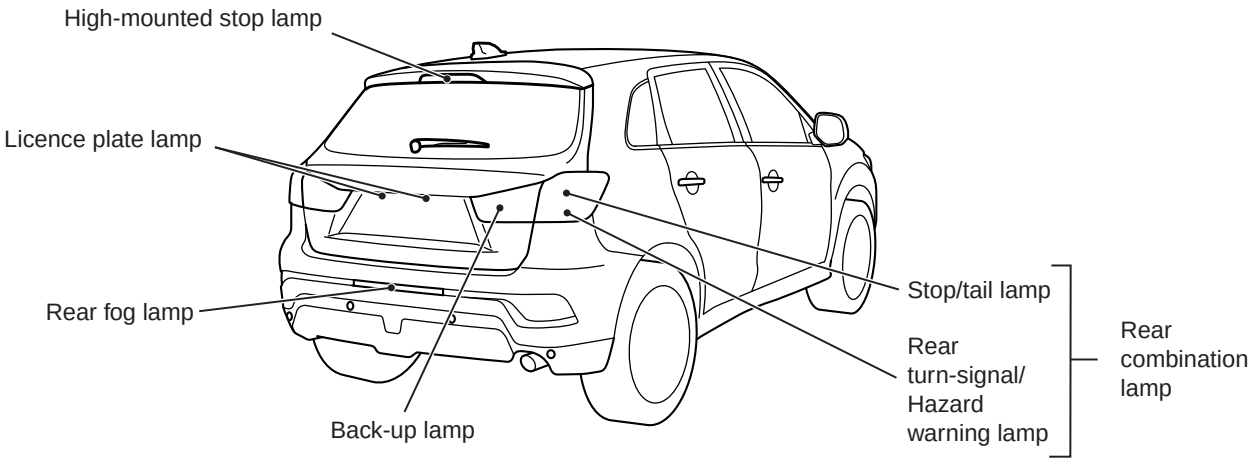

ACI02061AB

4.13. Battery(ies)

M6131300000108

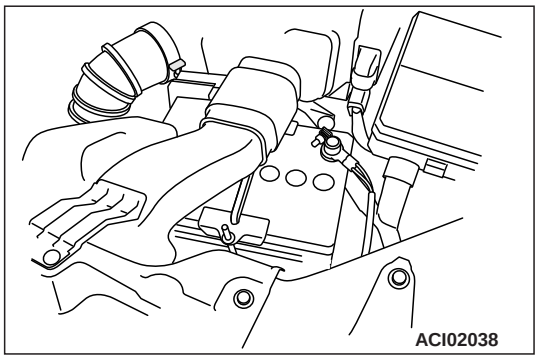

Item	75D23L	Q-85
Voltage V	12	12
Capacity (5-hour rate) Ah	52	55
Electrolytic fluid specific gravity (fully charged state at 20°C)	1.220 – 1.290	1.250 – 1.290

GROUP 5

AXLES, WHEELS, TYRES AND SUSPENSION

CONTENTS

5.1. AXLES 5-2
5.1.1. Axles 5-2
5.1.2. Stub axles 5-7
5.1.3. Wheel bearings 5-7

5.2. WHEELS AND TYRES 5-8
5.2.1. Road wheel hub 5-8
5.2.2. Wheels 5-8
5.2.3. Tyres 5-10

5.3. SUSPENSION SYSTEM 5-16
5.3.1. Springs and stabiliser 5-16
5.3.2. Shock absorbers 5-16
5.3.2.1. efficiency testing of damping (X)2 . 5-16
5.3.3. Torque tubes, radius arms, wishbones and suspension arms 5-16
5.3.4. Suspension joints 5-16
5.3.5. Air suspension 5-16

5.1. Axles

5.1.1. Axles

M6140100100068

FRONT AXLE

GENERAL INFORMATION

For the front axle, the unit ball bearing (double-row angular contact ball bearing) with an integral oil seal is used as a wheel bearing, and constant velocity joint as a driveshaft.
It has the following features:

- The driveshaft incorporates constant velocity joints with high transmission efficiency for low vibration and noise.
- Dynamic damper is mounted on driveshaft to reduce differential gear noise.<2WD-RH>
- The long stem integrated with the differential side constant velocity joint is adopted to streamline the structure.<4WD-RH>
- Lead-free grease for the constant velocity joint is adopted.
- The number of parts is reduced by integrating the magnetic encoder for ABS wheel speed detection into the wheel bearing.

CONSTRUCTION DIAGRAM

<2WD>

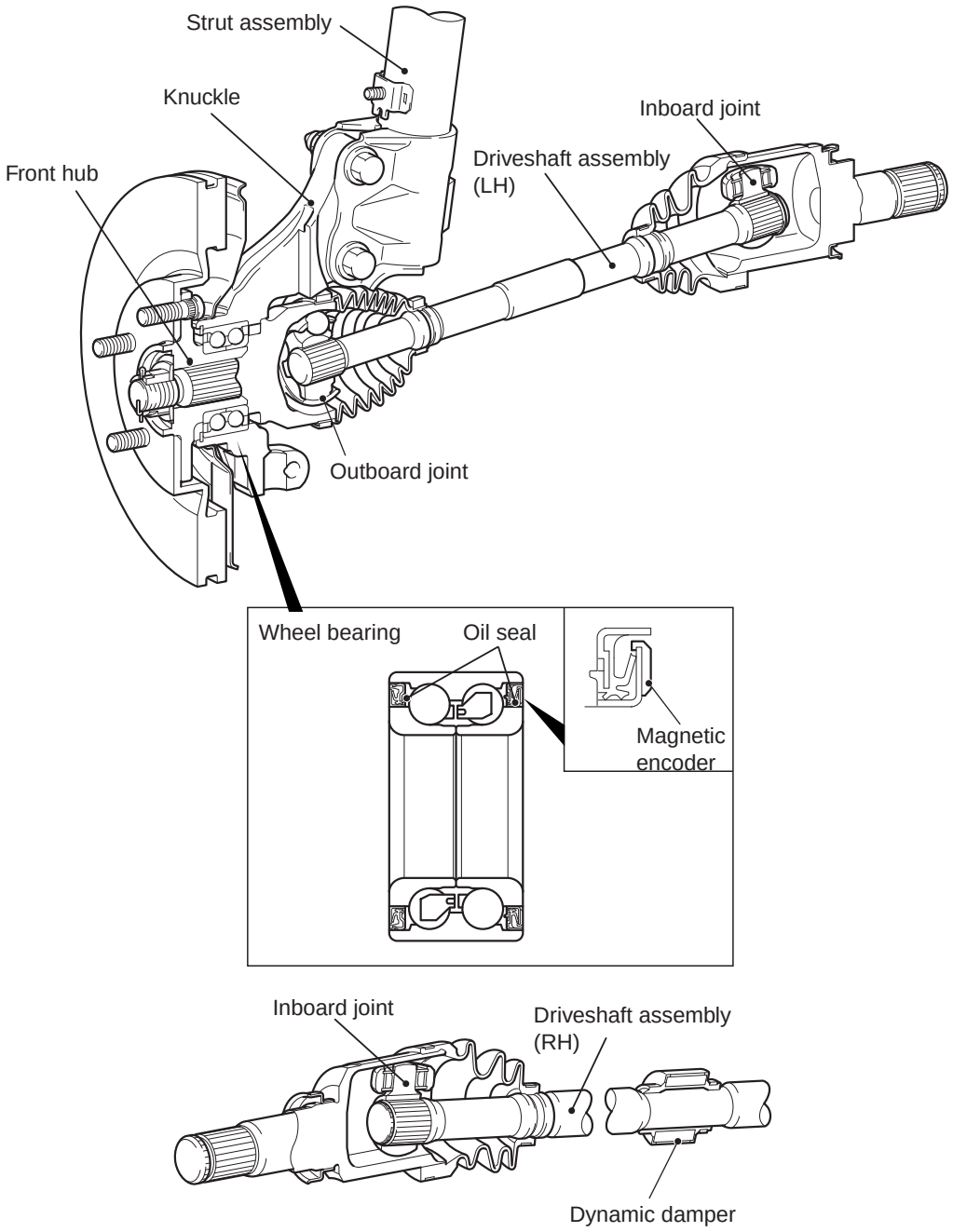

ACI02063 AB

<4WD>

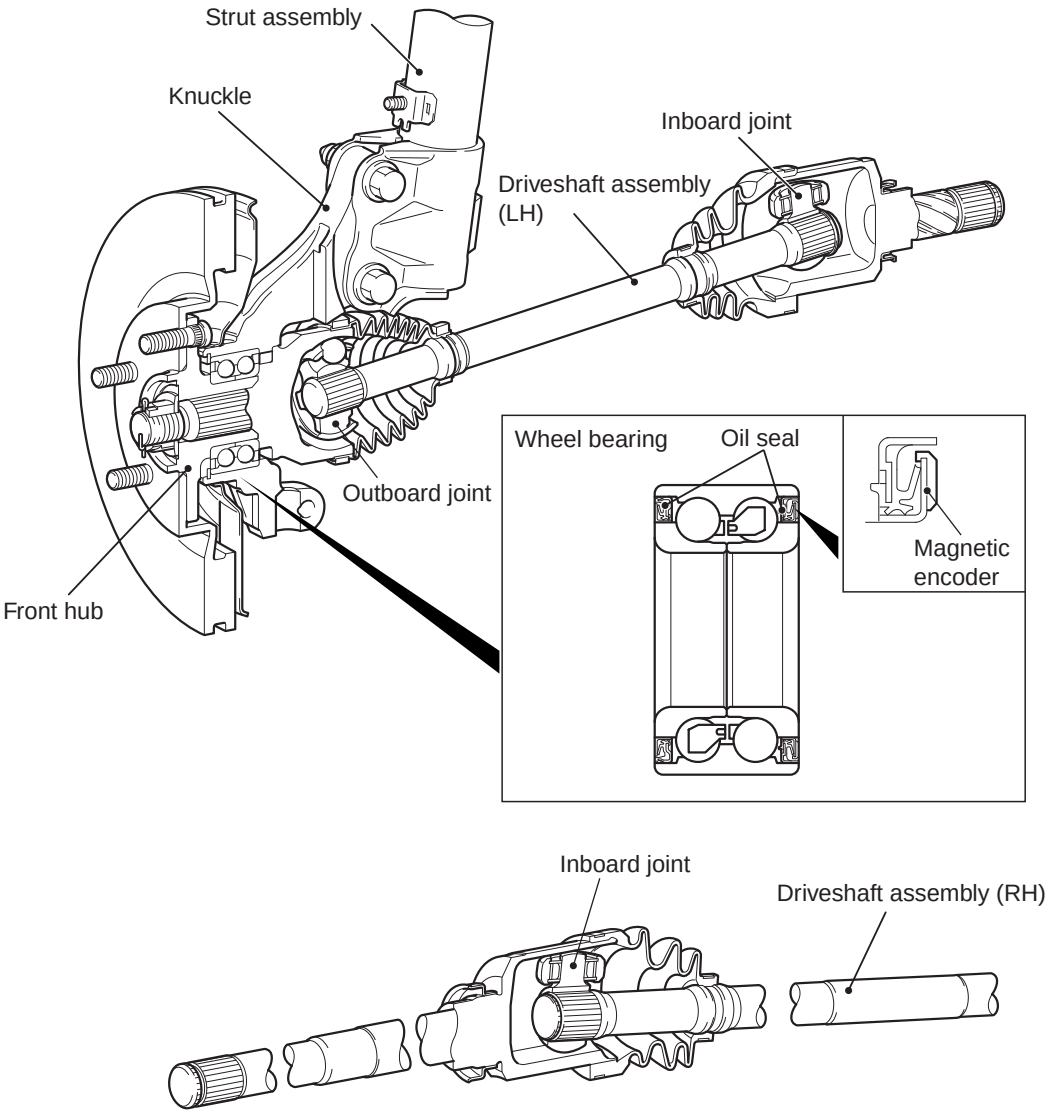

ACI02064 AB

REAR AXLE <2WD>

CONSTRUCTION DIAGRAM

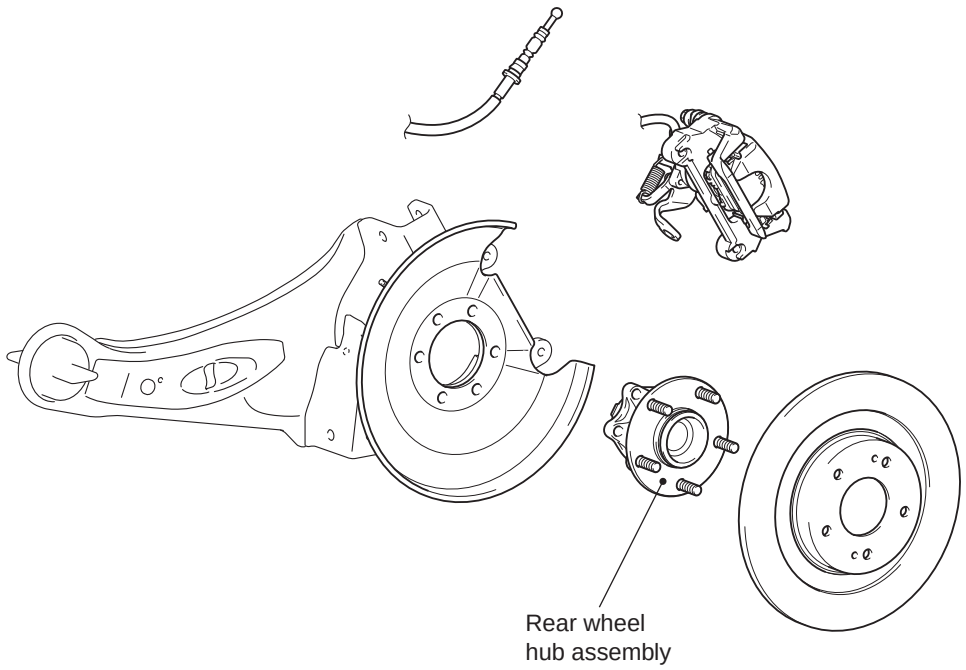

ACI02050 AB

REAR AXLE <4WD>

CONSTRUCTION DIAGRAM

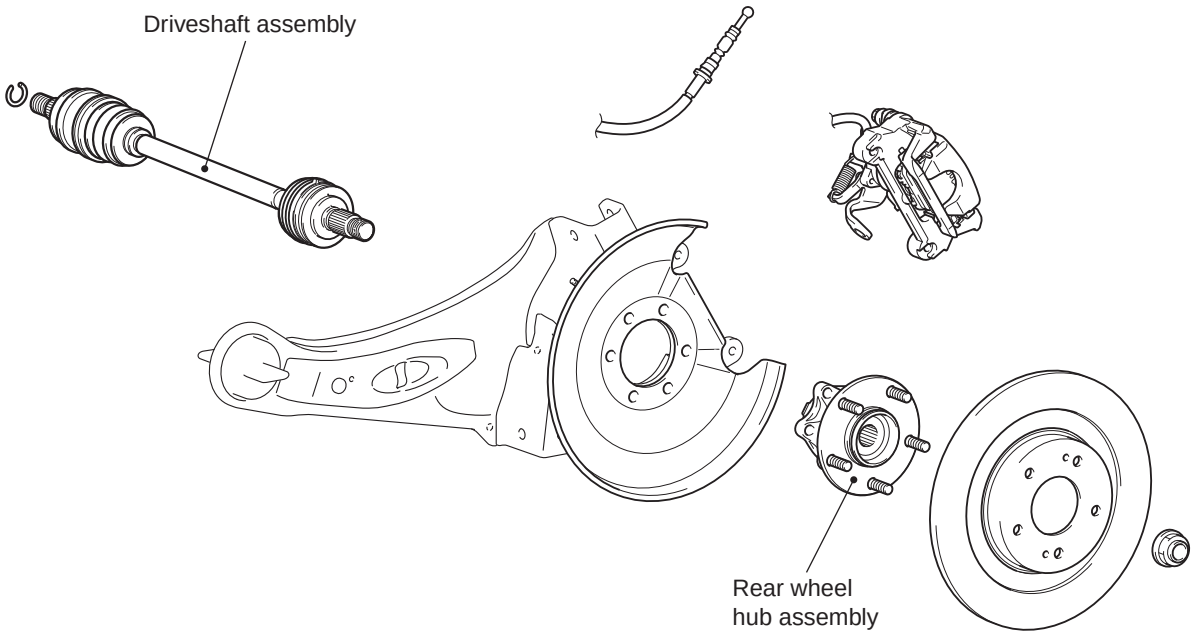

ACI02051 AB

CHECK SUSPENSION SYSTEM FOR DAMAGE AND LOOSENESS

1. Check each portion of suspension for damage visually.
2. Check each installation bolt and nut for looseness by spanner or similar tool.

FRONT SUSPENSION

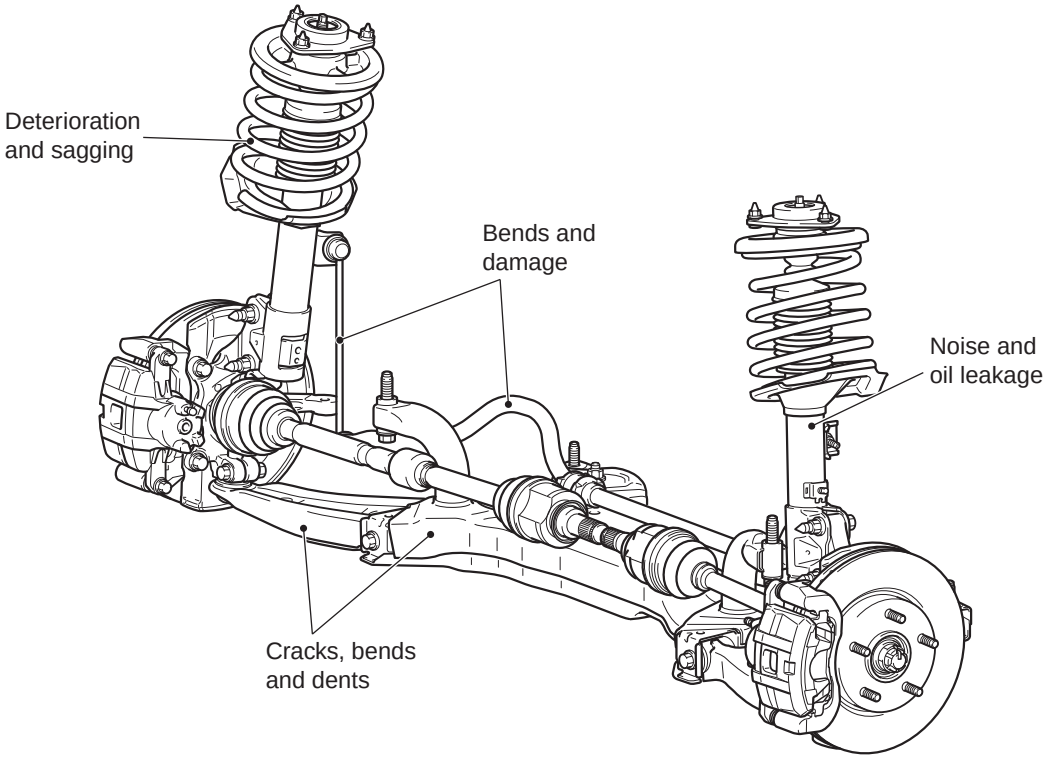

REAR SUSPENSION

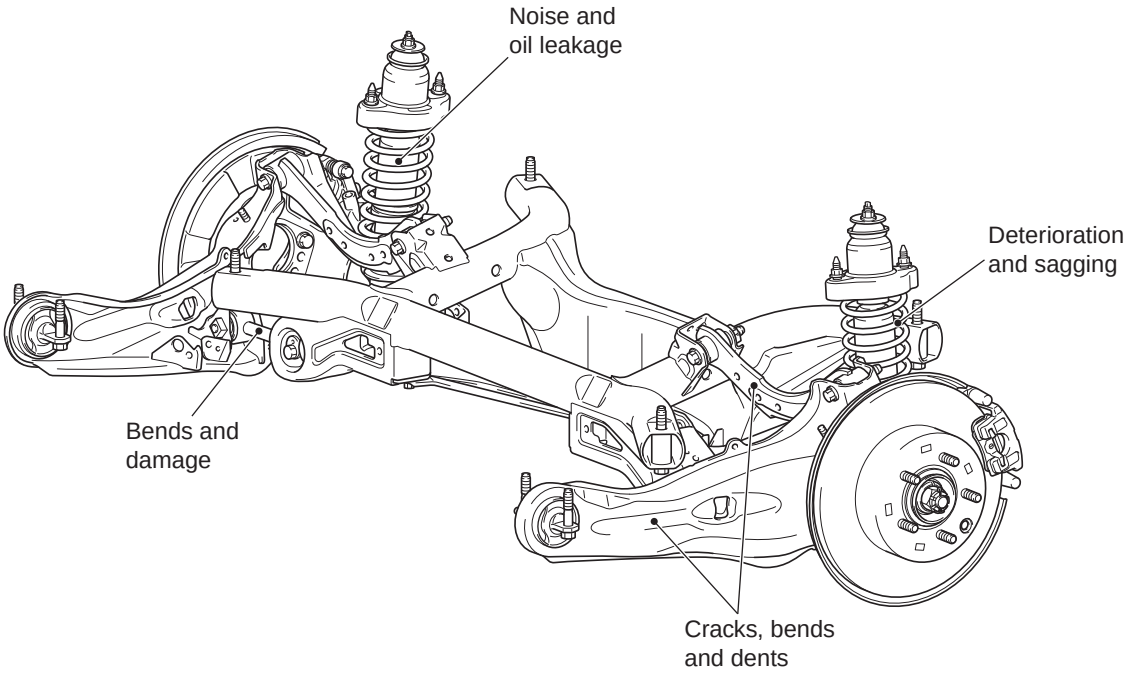

AC700172AB

CHECK SUSPENSION ARM BALL JOINTS FOR PLAY, AND DUST COVERS FOR DAMAGE

LOWER ARM BALL JOINT AXIAL PLAY CHECK

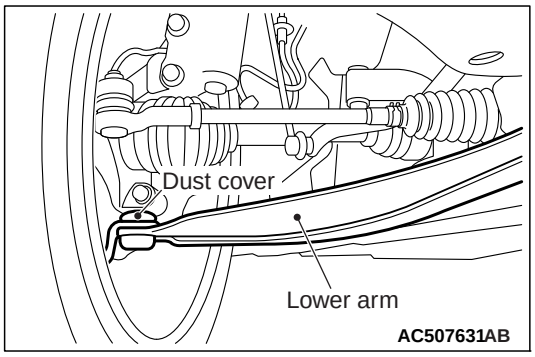

1. Raise the vehicle.
2. Move the lower arm up and down with your hands to check for an excessive play in the axial direction of the ball joint. If there is an excessive play, replace the lower arm assembly.

DUST COVERS FOR DAMAGE

Check dust covers for damage.

CHECK DRIVESHAFT BOOTS FOR DAMAGE

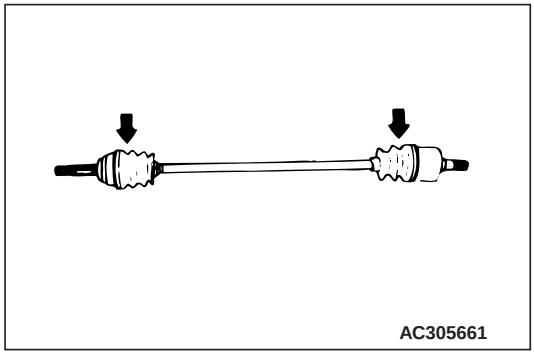

Check the driveshaft boots for damage.

CHECK FRONT AND REAR WHEEL BEARINGS FOR PLAY

1. Remove the wheel assembly and the brake pad assembly.
2. Insert M12 plain washers, and tighten the nuts (M12 × 1.5) diagonally and evenly to the specified torque (98±10N·m) to secure the brake disc to the hub assembly.

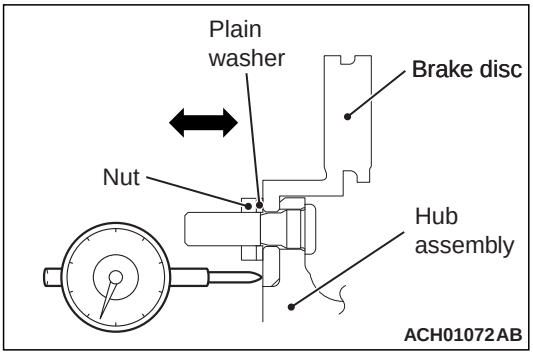

3. Set a dial gauge as shown in the figure. Move the hub in the axial direction and measure the axial play.

   Limit:
   0.05 mm <Front>
   0.05 mm <Rear>

4. On completion, install the wheel assembly and the brake pad assembly.

5.1.2. Stub axles

M6140100200065

"Not Applicable"

5.1.3. Wheel bearings

M6140100300062

"Not Applicable"

5.2. Wheels and tyres

5.2.1. Road wheel hub

"Not Applicable"

M6140200100065

5.2.2. Wheels

M6140200200125

The wheels and tyres of the following specifications have been established. The flat tyre temporary repair kit is standard equipped on some models.

SPECIFICATIONS

Road wheel and tyre

Black Sam

Item		Standard
Wheel	Type	18 × 7.0J
	Size	38
	Amount of wheel offset mm	114.3
	PCD mm	225/55R18 98V
Tyre	Size	18 × 7.0J

NOTE: PCD indicates the pitch circle diameter of the wheel installation holes.

M-line

Item		Standard	Option	Option*2
Wheel	Type	Steel type	Aluminium type	Aluminium type
	Size	16 × 6.5J	16 × 6.5J	17 × 6.5J
	Amount of wheel offset mm	46	46	46
	PCD mm	114.3	114.3	114.3
Tyre	Size	215/70R16 100H*1 215/65R16 98H*2	215/65R16 98H	215/60R17 96H

NOTE:

- **1: Vehicles for Europe.*
- **2: Vehicles for Russia and South Africa.*
- *PCD indicates the pitch circle diameter of the wheel installation holes.*

H-line <Except vehicles for Russia>

Item		Standard	Option
Wheel	Type	Aluminium type	Steel type
	Size	18 × 7.0J	16 × 6.5J
	Amount of wheel offset mm	38	46
	PCD mm	114.3	114.3
Tyre	Size	225/55R18 98V	215/70R16 100H

NOTE: PCD indicates the pitch circle diameter of the wheel installation holes.

H-line <Vehicles for Russia>

Item		Standard	Option	
Wheel	Type	Aluminium type	Aluminium type	Aluminium type
	Size	16 × 6.5J	17 × 6.5J	18 × 7.0J
	Amount of wheel offset mm	46	46	38
	PCD mm	114.3	114.3	114.3
Tyre	Size	215/65R16 98H	215/60R17 96H	225/55R18 98V P225/55R18 97H

NOTE: PCD indicates the pitch circle diameter of the wheel installation holes.

Spare wheel and spare tyre

Black Sam

Item		Option
Wheel	Type	Steel type
	Size	16 × 4.0 T
	Amount of wheel offset mm	46
	PCD mm	114.3
Tyre	Size	T155/90D16 98M

NOTE: PCD indicates the pitch circle diameter of the wheel installation holes.

M-line <Except vehicles for Russia>

Item		Option
Wheel	Type	Steel type
	Size	16 × 4.0 T
	Amount of wheel offset mm	46
	PCD mm	114.3
Tyre	Size	T155/90D16 98M

NOTE: PCD indicates the pitch circle diameter of the wheel installation holes.

M-line <Vehicles for Russia>

Item		Standard	Option
Wheel	Type	Steel type	Aluminium type
	Size	16 × 6.5J	17 × 6.5J
	Amount of wheel offset mm	46	46
	PCD mm	114.3	114.3
Tyre	Size	215/65R16 98H	215/60R17 96H

NOTE: PCD indicates the pitch circle diameter of the wheel installation holes.

H-line <Vehicles for Europe>

Item		Standard	Option
Wheel	Type	Steel type	Steel type
	Size	16 × 4.0 T	16 × 6.5J
	Amount of wheel offset mm	46	46
	PCD mm	114.3	114.3
Tyre	Size	T155/90D16 98M	215/70R16 100H

NOTE: PCD indicates the pitch circle diameter of the wheel installation holes.

H-line <Vehicles for Russia>

Item		Standard	Option	
Wheel	Type	Steel type	Steel type	Aluminium type
	Size	16 × 6.5J	16 × 4.0 T	17 × 6.5J
	Amount of wheel offset mm	46	46	46
	PCD mm	114.3	114.3	114.3
Tyre	Size	215/65R16 98H	T155/90D16 98M	215/60R17 96H

NOTE: PCD indicates the pitch circle diameter of the wheel installation holes.

5.2.3. Tyres

M6140200300122

The wheels and tyres of the following specifications have been established. The flat tyre temporary repair kit is standard equipped on some models.

SPECIFICATIONS

Road wheel and tyre

Black Sam

Item		Standard
Wheel	Type	18 × 7.0J
	Size	38
	Amount of wheel offset mm	114.3
	PCD mm	225/55R18 98V
Tyre	Size	18 × 7.0J

NOTE: PCD indicates the pitch circle diameter of the wheel installation holes.

M-line

Item		Standard	Option	Option*2
Wheel	Type	Steel type	Aluminium type	Aluminium type
	Size	16 × 6.5J	16 × 6.5J	17 × 6.5J
	Amount of wheel offset mm	46	46	46
	PCD mm	114.3	114.3	114.3
Tyre	Size	215/70R16 100H*1 215/65R16 98H*2	215/65R16 98H	215/60R17 96H

NOTE:

- **1: Vehicles for Europe.*
- **2: Vehicles for Russia and South Africa.*
- *PCD indicates the pitch circle diameter of the wheel installation holes.*

H-line <Except vehicles for Russia>

Item		Standard	Option
Wheel	Type	Aluminium type	Steel type
	Size	18 × 7.0J	16 × 6.5J
	Amount of wheel offset mm	38	46
	PCD mm	114.3	114.3
Tyre	Size	225/55R18 98V	215/70R16 100H

NOTE: PCD indicates the pitch circle diameter of the wheel installation holes.

H-line <Vehicles for Russia>

Item		Standard	Option	
Wheel	Type	Aluminium type	Aluminium type	Aluminium type
	Size	16 × 6.5J	17 × 6.5J	18 × 7.0J
	Amount of wheel offset mm	46	46	38
	PCD mm	114.3	114.3	114.3
Tyre	Size	215/65R16 98H	215/60R17 96H	225/55R18 98V P225/55R18 97H

NOTE: PCD indicates the pitch circle diameter of the wheel installation holes.

Spare wheel and spare tyre

Black Sam

Item		Option
Wheel	Type	Steel type
	Size	16 × 4.0 T
	Amount of wheel offset mm	46
	PCD mm	114.3
Tyre	Size	T155/90D16 98M

NOTE: PCD indicates the pitch circle diameter of the wheel installation holes.

M-line <Except vehicles for Russia>

Item		Option
Wheel	Type	Steel type
	Size	16 × 4.0 T
	Amount of wheel offset mm	46
	PCD mm	114.3
Tyre	Size	T155/90D16 98M

NOTE: PCD indicates the pitch circle diameter of the wheel installation holes.

M-line <Vehicles for Russia>

Item		Standard	Option
Wheel	Type	Steel type	Aluminium type
	Size	16 × 6.5J	17 × 6.5J
	Amount of wheel offset mm	46	46
	PCD mm	114.3	114.3
Tyre	Size	215/65R16 98H	215/60R17 96H

NOTE: PCD indicates the pitch circle diameter of the wheel installation holes.

H-line <Vehicles for Europe>

Item		Standard	Option
Wheel	Type	Steel type	Steel type
	Size	16 × 4.0 T	16 × 6.5J
	Amount of wheel offset mm	46	46
	PCD mm	114.3	114.3
Tyre	Size	T155/90D16 98M	215/70R16 100H

NOTE: PCD indicates the pitch circle diameter of the wheel installation holes.

H-line <Vehicles for Russia>

Item		Standard	Option	
Wheel	Type	Steel type	Steel type	Aluminium type
	Size	16 × 6.5J	16 × 4.0 T	17 × 6.5J
	Amount of wheel offset mm	46	46	46
	PCD mm	114.3	114.3	114.3
Tyre	Size	215/65R16 98H	T155/90D16 98M	215/60R17 96H

NOTE: PCD indicates the pitch circle diameter of the wheel installation holes.

TYRE PRESSURE MONITORING SYSTEM (TPMS)

When the tyre pressure becomes under the specified value, the TPMS function warns the driver of that state by illuminating the TPMS warning lamp and the multi-information display in the combination meter warn the driver when there is a TPMS-related problem.

CONSTRUCTION DIAGRAM

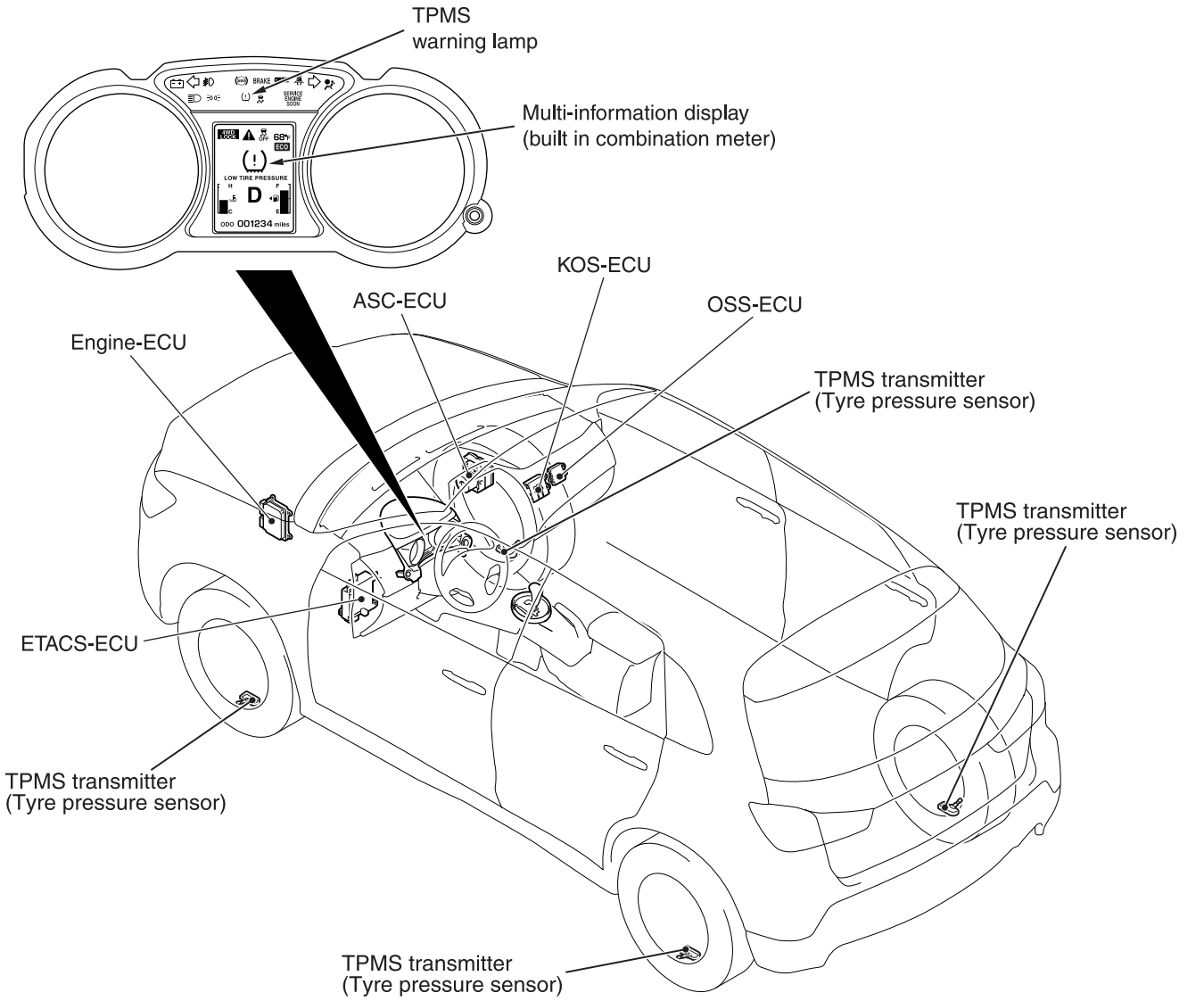

Main components and functions

Parts name	Functional description
KOS-ECU	Wireless communication with the TPMS transmitter <Vehicles with KOS>
WCM-ECU	Wireless communication with the TPMS transmitter <Vehicles with WCM>

Parts name	Functional description
OSS-ECU	Output of ECU back-up power supply via wire communication with KOS-ECU or WCM-ECU.
ETACS-ECU	CAN communication with KOS-ECU, WCM-ECU, ASC-ECU, Engine-ECU, and combination meter
Engine-ECU	Transmit the atmospheric pressure signal to the KOS-ECU or WCM-ECU.
ASC-ECU	Communicates with KOS-ECU or WCM-ECU via CAN. Sends the vehicle speed data.
TPMS transmitter	Measure tyre pressure directly, then send radio frequency signal to receiver antenna module.
Combination meter (Multi information display, TPMS warning lamp, low tyre inflation pressure warning threshold value reset function, tyre ID set changeover function)	Communicates with KOS-ECU,WCM-ECU or ETACS-ECU via CAN. Receives the warning request or warning information from KOS-ECU,WCM-ECU or ETACS-ECU, activates* the warning lamp. Warning symbol and message is additionally displayed on the multi information display. When executing the low tyre inflation pressure warning threshold value reset function and the tyre ID set changeover function, the execution menu is displayed.

*NOTE: *: Illuminates for tyre pressure warning. Flashes for about 1 minute and then continuously illuminated for TPMS malfunction warning.*

System configuration

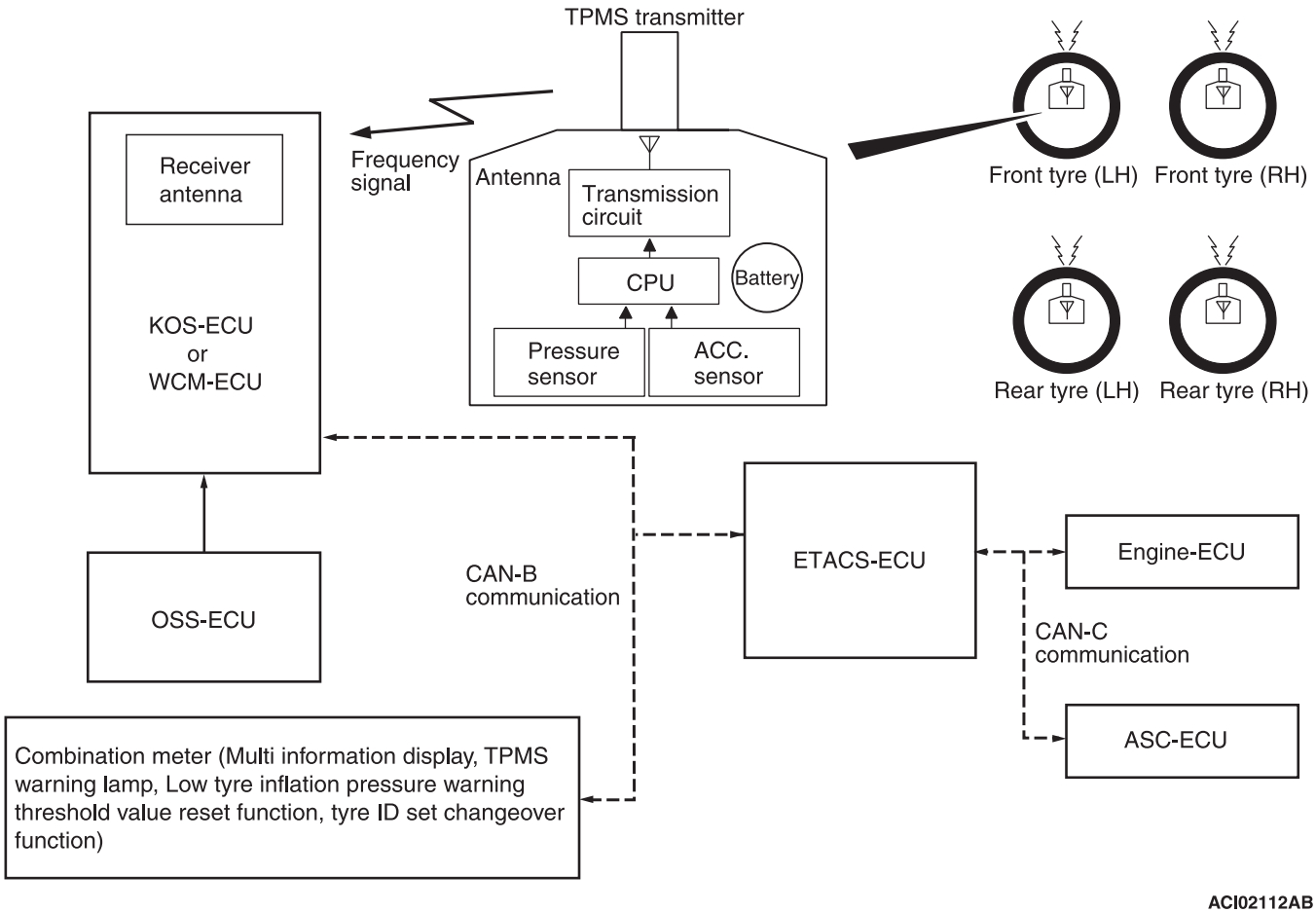

TYRE PRESSURE MONITORING SYSTEM (TPMS) FUNCTION

When the tyre pressure becomes under the specified value, the TPMS function warns the driver of that state by illuminating the TPMS warning lamp.

OPERATION

- The signals from the TPMS transmitter are received by the KOS-ECU or WCM-ECU via receiver antenna.
- KOS-ECU or WCM-ECU processes input signals from each TPMS transmitter as well as vehicle speed signals from the ASC-ECU. It receives the atmospheric pressure signal from engine-ECU, and when the atmospheric pressure is low (such as at high altitude), it calibrates the tyre pressure received from TPMS transmitter and makes a judgement of warning. When the road tyre pressure is low, it sends a warning signal causing the TPMS warning lamp to be illuminated. When the TPMS has problems, it sends a warning signal causing the TPMS warning lamp to be flashed*.

*NOTE: *: Change to continuous illumination after flashing for about 1 minute.*

- For 3 seconds after the engine switch is turned to the "ON" position, KOS-ECU or WCM-ECU illuminates the TPMS warning lamp to check any breaks in the TPMS warning lamp circuit.
- By connecting the M.U.T.-IIISE to the diagnosis connector, data stored in KOS-ECU or WCM-ECU (data of tyre pressure and TPMS transmitter ID, the alarm status and warning history, etc.) can be displayed and TPMS transmitter ID can be registered.
- Two sets of four TPMS transmitters can be registered as sets 1 and 2.

NOTE: If the TPMS transmitter is replaced, register the ID codes of all TPMS transmitters again about the ID set of tyre which includes the replaced transmitter using the M.U.T.-IIISE.

- Low tyre inflation pressure warning threshold value reset and tyre ID set changeover can be performed. (By registering two sets at the dealer in advance, the tyre ID set can be freely switched by operating the combination meter.)

NOTE: When the tyre ID set is switched, the low tyre inflation pressure warning threshold value will be automatically reset.

TPMS TRANSMITTER (TYRE PRESSURE SENSOR)

The TPMS transmitter combines the valve and tyre pressure sensor in a single unit. The TPMS transmitters are mounted inside the tyres. The TPMS transmitter measures tyre pressure directly with its tyre pressure sensor and sends radio frequency signals to KOS-ECU or WCM-ECU. The TPMS transmitter includes acceleration sensor that senses tyre rotation, and change tyre pressure sampling and data transmission timing when vehicle is running.

NOTE: Use only genuine wheels. The use of non-genuine wheels may cause the improper installation of the TPMS transmitters, possibly resulting in air leakage and damage to the TPMS transmitter.

TYRE PRESSURE SAMPLING TIMING

Vehicle status	Sampling timing
At vehicle moving	once every 5 seconds
At vehicle stationary	once every 1 minute

NOTE: Vehicle moving = vehicle speed: approximately 25 km/h or more

DATA TRANSMISSION TIMING

Vehicle status	Transmission timing
At vehicle moving	once every 1 minute*
At vehicle stationary	once every 13 hours

If a sampled pressure varies by ±10 kPa from the last transmitted pressure value, an additional transmission will occur.

*NOTE: *: Once every 15 seconds for first 30 transmission after vehicle starts moving.*

5.3. Suspension system

5.3.1. Springs and stabiliser

M6140300100062

"Not Applicable"

5.3.2. Shock absorbers

M6140300200069

"Not Applicable"

5.3.2.1. efficiency testing of damping (X)2

M6140310100063

"Not Applicable"

5.3.3. Torque tubes, radius arms, wishbones and suspension arms

M6140300300066

"Not Applicable"

5.3.4. Suspension joints

M6140300400063

"Not Applicable"

5.3.5. Air suspension

M6140300500060

"Not Applicable"

GROUP 6

CHASSIS AND CHASSIS ATTACHMENTS

CONTENTS

6.1. CHASSIS OR FRAME AND ATTACHMENTS 6-2

6.1.1. General condition 6-2
6.1.2. Exhaust pipes and silencers 6-2
6.1.3. Fuel tank and pipes (including heating fuel tank and pipes) 6-2
6.1.4. Bumpers, lateral protection and rear underrun devices 6-3
6.1.5. Spare wheel carrier (if fitted) 6-3
6.1.6. Mechanical coupling and towing device 6-3
6.1.7. Transmission 6-3
6.1.8. Engine mountings 6-3
6.1.9 Engine performance (X) 2 6-3

6.2. CAB AND BODYWORK 6-4

6.2.1. Condition 6-4
6.2.2. Mounting 6-4
6.2.3. Doors and door catches 6-4
6.2.4. Floor 6-4
6.2.5. Driver's seat 6-4
6.2.6. Other seats 6-4
6.2.7. Driving controls 6-4
6.2.8. Cab steps 6-4
6.2.9. Other interior and exterior fittings and equipment 6-4
6.2.10. Mudguards (wings), spray suppression devices 6-4
6.2.11. Stand 6-4
6.2.12. Handgrips and footrests 6-4

6.1. Chassis or frame and attachments

6.1.1. General condition

M6150100100069

"Not Applicable"

6.1.2. Exhaust pipes and silencers

M6150100200066

"Not Applicable"

6.1.3. Fuel tank and pipes (including heating fuel tank and pipes)

M6150100300096

<2WD>

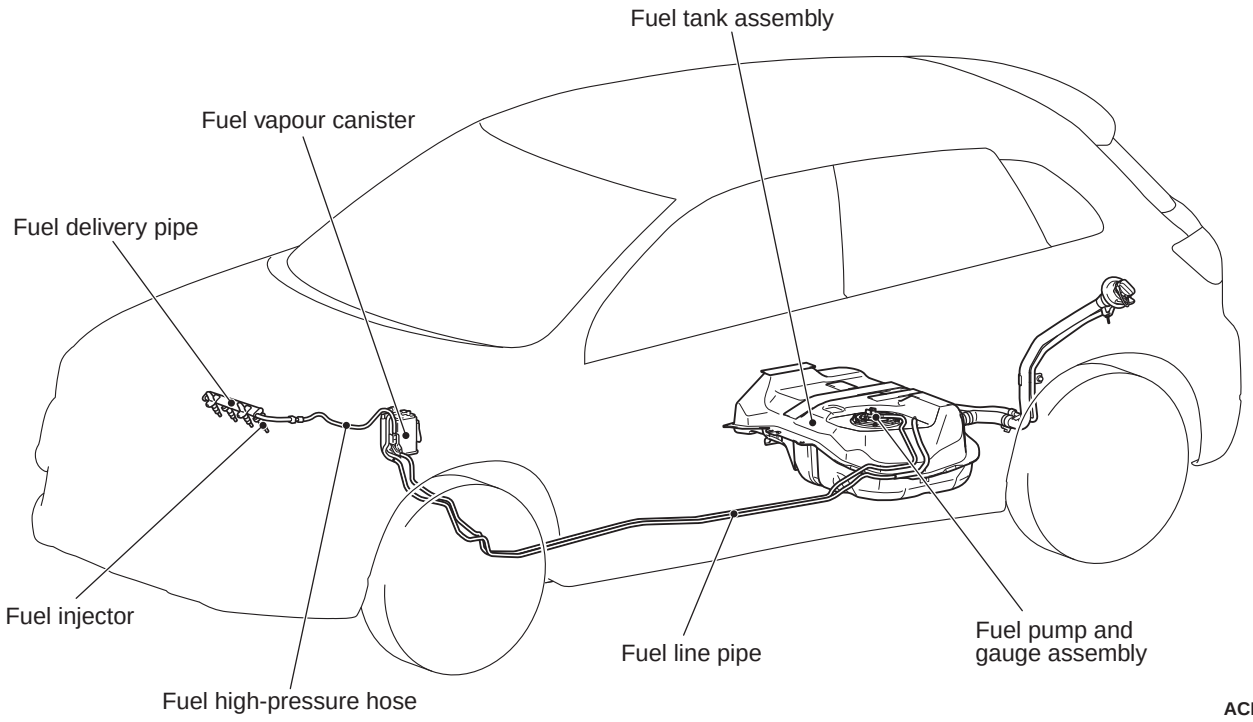

ACI02256 AB

<4WD>

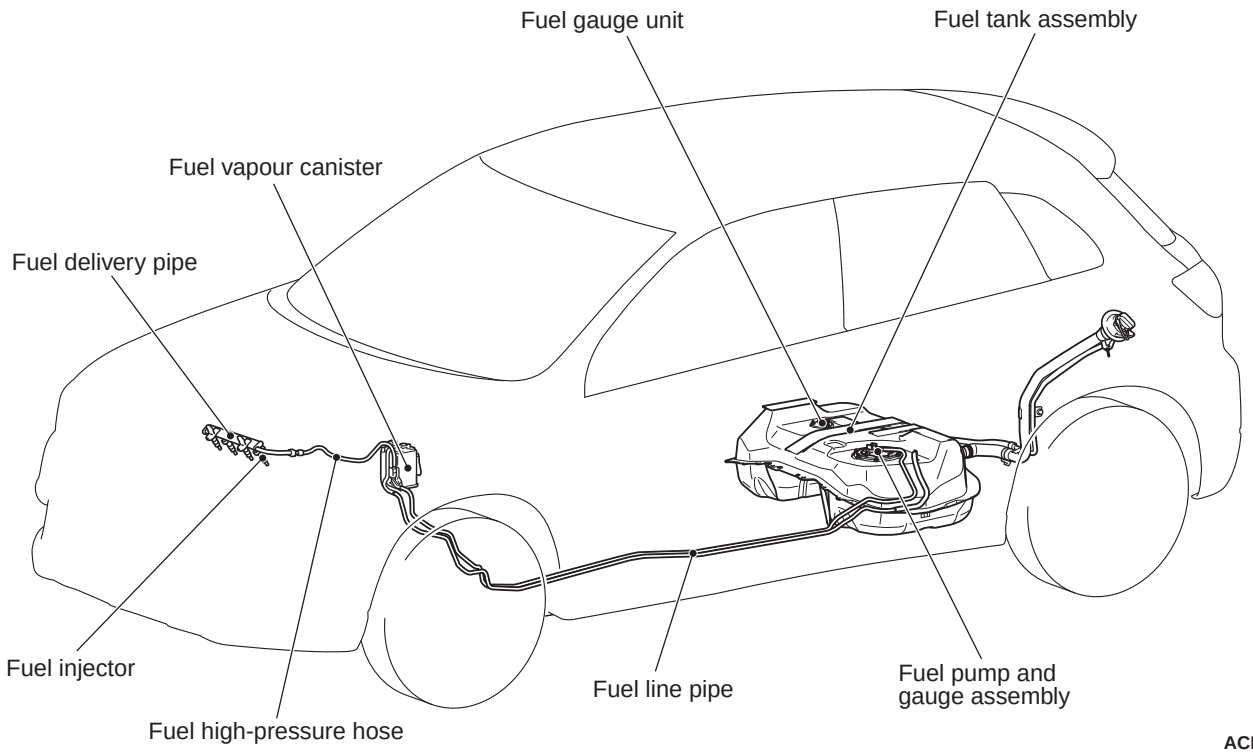

ACI02257 AB

6.1.4. Bumpers, lateral protection and rear underrun devices

M6150100400060

"Not Applicable"

6.1.5. Spare wheel carrier (if fitted)

M6150100500067

"Not Applicable"

6.1.6. Mechanical coupling and towing device

M6150100600064

"Not Applicable"

6.1.7. Transmission

M6150100700061

"Not Applicable"

6.1.8. Engine mountings

M6150100800068

"Not Applicable"

6.1.9 Engine performance (X) 2

M6150100900065

"Query raised for this content"

6.2. Cab and bodywork

6.2.1. Condition

M6150200100066

"Not Applicable"

6.2.2. Mounting

M6150200200063

"Not Applicable"

6.2.3. Doors and door catches

M6150200300060

"Not Applicable"

6.2.4. Floor

M6150200400067

"Not Applicable"

6.2.5. Driver's seat

M6150200500064

"Not Applicable"

6.2.6. Other seats

M6150200600061

- Max Number of seats total (excluding driver's seat) - 4
- Number of rear-facing seats - 0

6.2.7. Driving controls

M6150200700068

"Not Applicable"

6.2.8. Cab steps

M6150200800065

"Not Applicable"

6.2.9. Other interior and exterior fittings and equipment

M6150200900062

"Not Applicable"

6.2.10. Mudguards (wings), spray suppression devices

M6150201000062

"Not Applicable"

6.2.11. Stand

M6150201100069

"Not Applicable"

6.2.12. Handgrips and footrests

M6150201200066

"Not Applicable"

GROUP 7

OTHER EQUIPMENT

CONTENTS

7.1. SAFETY-BELTS/BUCKLES AND RESTRAINT SYSTEMS (AS REGARDS L CATEGORY: L6/L7). 7-2

7.1.1. Security of safety-belts/buckles mounting 7-2

7.1.2. Condition of safety-belts/buckles. . . . 7-3

7.1.3. Safety belt load limiter. 7-4

7.1.4. Safety belt Pre-tensioners. 7-5

7.1.5. Airbag 7-7

7.1.6. SRS Systems 7-9

7.2. FIRE EXTINGUISHER (X)2. 7-11

7.3. LOCKS AND ANTI-THEFT DEVICE 7-11

7.4. WARNING TRIANGLE (IF REQUIRED) (X)2. 7-11

7.5. FIRST AID KIT. (IF REQUIRED) (X)2 7-11

7.6. WHEEL CHOCKS (WEDGES) (IF REQUIRED) (X)2. 7-11

7.7. AUDIBLE WARNING DEVICE. . . 7-11

7.8. SPEEDOMETER 7-11

7.9. TACHOGRAPH (IF FITTED/REQUIRED) 7-11

7.10. SPEED LIMITATION DEVICE (IF FITTED/ REQUIRED) 7-11

7.11 ODOMETER IF AVAILABLE (X)2 7-12

7.12 ELECTRONIC STABILITY CONTROL (ESC) IF FITTED/REQUIRED. 7-13

7.1. Safety-belts/buckles and restraint systems (as regards L category: L6/L7)

7.1.1. Security of safety-belts/buckles mounting

M6160100100060

<Front seat belt>

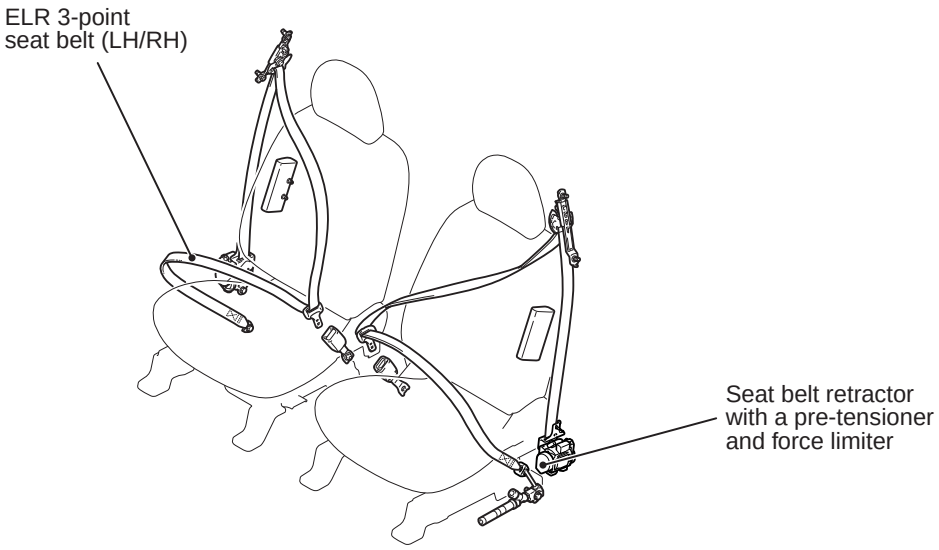

ACI02052 AB

<Rear seat belt>

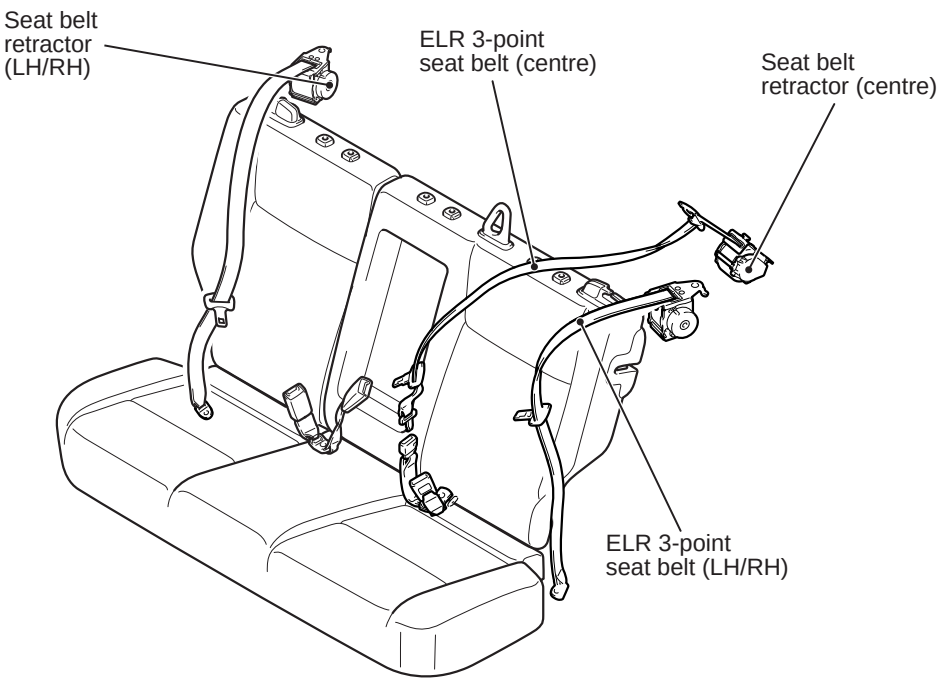

ACI02104 AB

7.1.2. Condition of safety-belts/buckles.

M6160100200067

<Front seat belt>

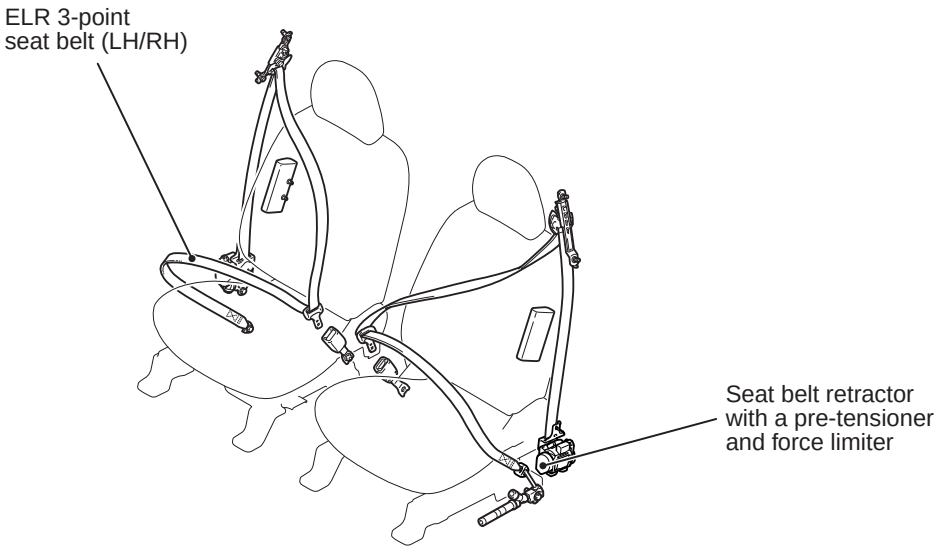

ACI02052 AB

<Rear seat belt>

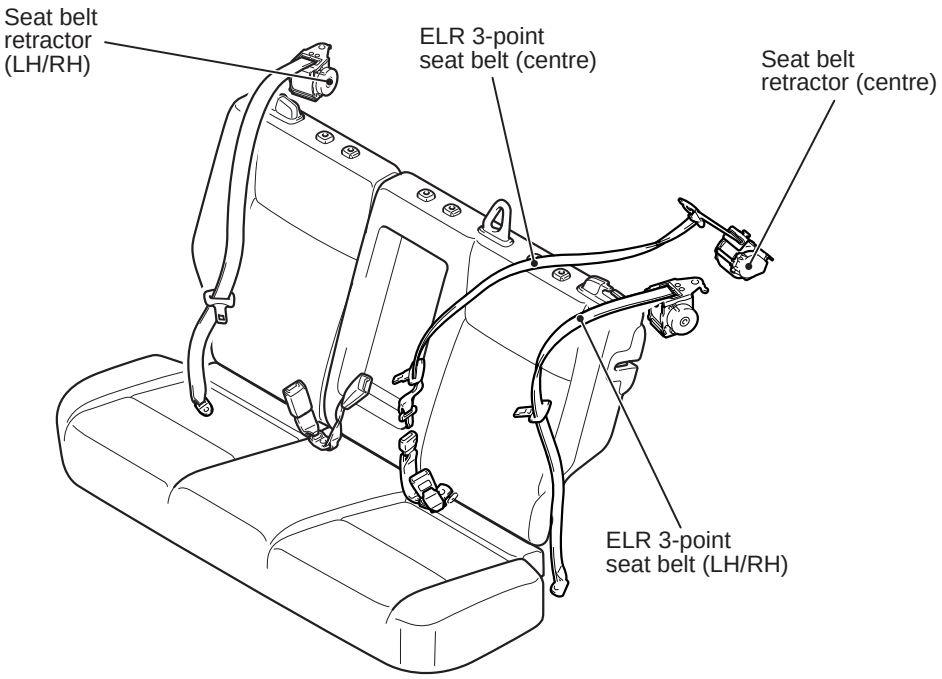

ACI02104 AB

7.1.3. Safety belt load limiter

M6160100300064

<Front seat belt>

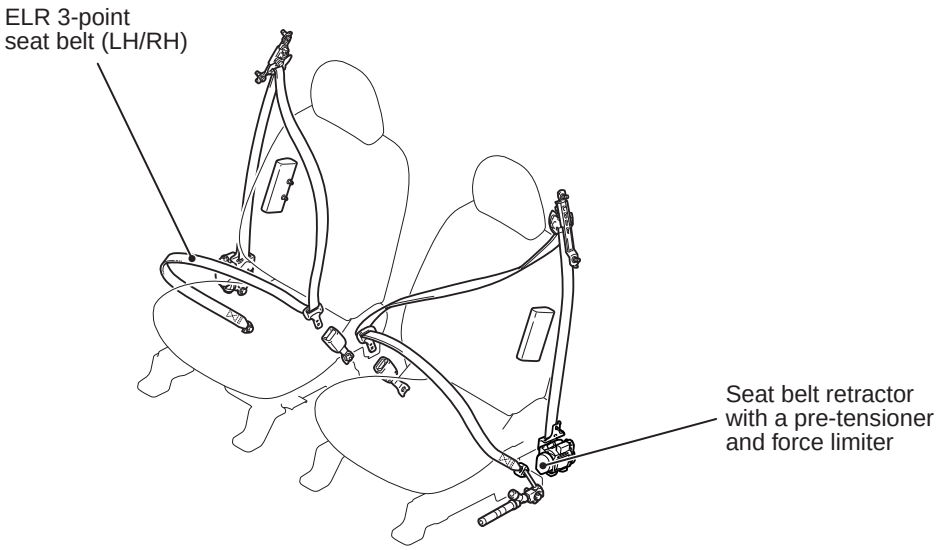

ACI02052 AB

<Rear seat belt>

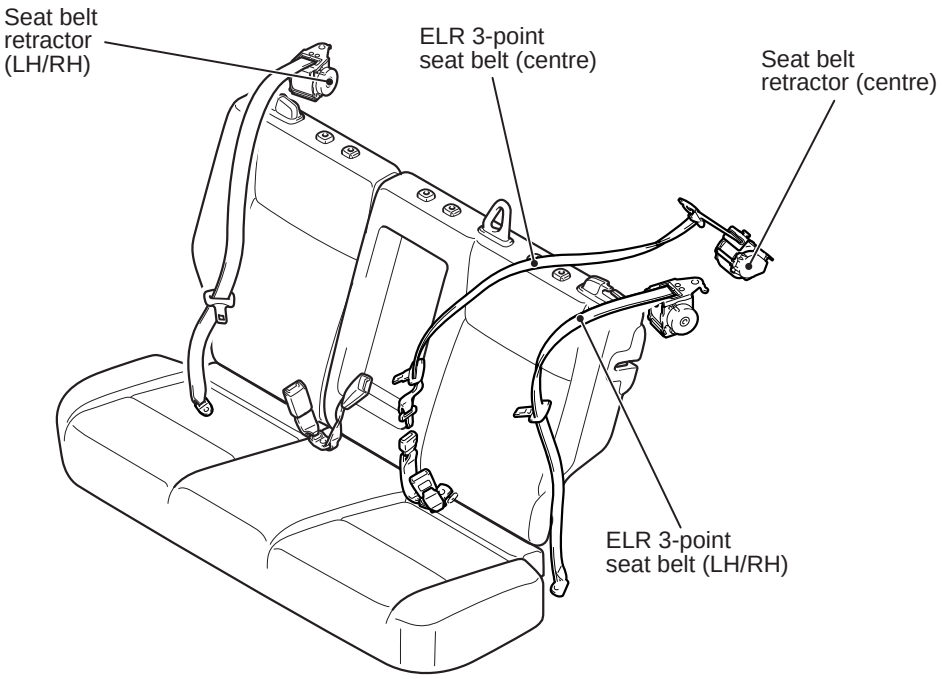

ACI02104 AB

7.1.4. Safety belt Pre-tensioners

M6160100400061

The Supplemental Restraint System (SRS) and seat belt with pre-tensioner is designed to supplement the driver's and front passenger's seat belts to help reduce the risk or severity of injury to the driver and front passenger by activating and deploying both front air bags in certain frontal collisions. The side-air bag and the curtain air bag are activated when an impact exceeds the threshold upon a side collision, and inflates to protect the heads of the occupants in the front and rear seats.
The SRS consists of air bag modules, SRS air bag control unit (SRS-ECU), two front impact sensors, two side impact sensors, SRS warning lamp, clock spring, passenger’s air bag cut off switch <Except vehicles for South Africa>, passenger’s air bag OFF indicator lamp <Except vehicles for South Africa>, lap pre-tensioner <Except vehicles for South Africa> and seat belt pre-tensioner. Front air bags are located in the centre of the steering wheel and above the glove box. Knee air bag is installed under the column cover. Each air bag is made up of a folded air bag and an inflator unit. Side-airbags are located inside the front seatback assemblies. The curtain air bag module consists of an air bag, an inflator, and the fixing gear relating to those parts, and is installed in the roof side sections (from the driver's and the passenger's front pillars to the rear pillars).The SRS-ECU under the front floor console monitors the system and has a front air bag safing G-sensor, front air bag analogue G-sensor and a side (curtain) air bag safing G-sensor. The front impact sensor is installed on the front end upper bar in the engine room and contains an analogue G-sensor and a microcomputer. The side impact sensor is installed in the lower parts of the centre pillars and contains an analogue G-sensor and a microcomputer. The warning lamp on the instrument panel indicates the operational status of the SRS. The clock spring is installed in the steering column. The passenger’s air bag cut off switch is located above inside the glove box. The passenger’s air bag OFF indicator lamp is installed in centre panel assembly. The lap pre-tensioner has been installed on the outer seat belt lower anchor side. The seat belt pre-tensioner is built into the driver's and passenger's front seat belt retractor.
Only authorized service personnel should do work on or around the SRS components. Those service personnel should read this manual carefully before starting any such work.

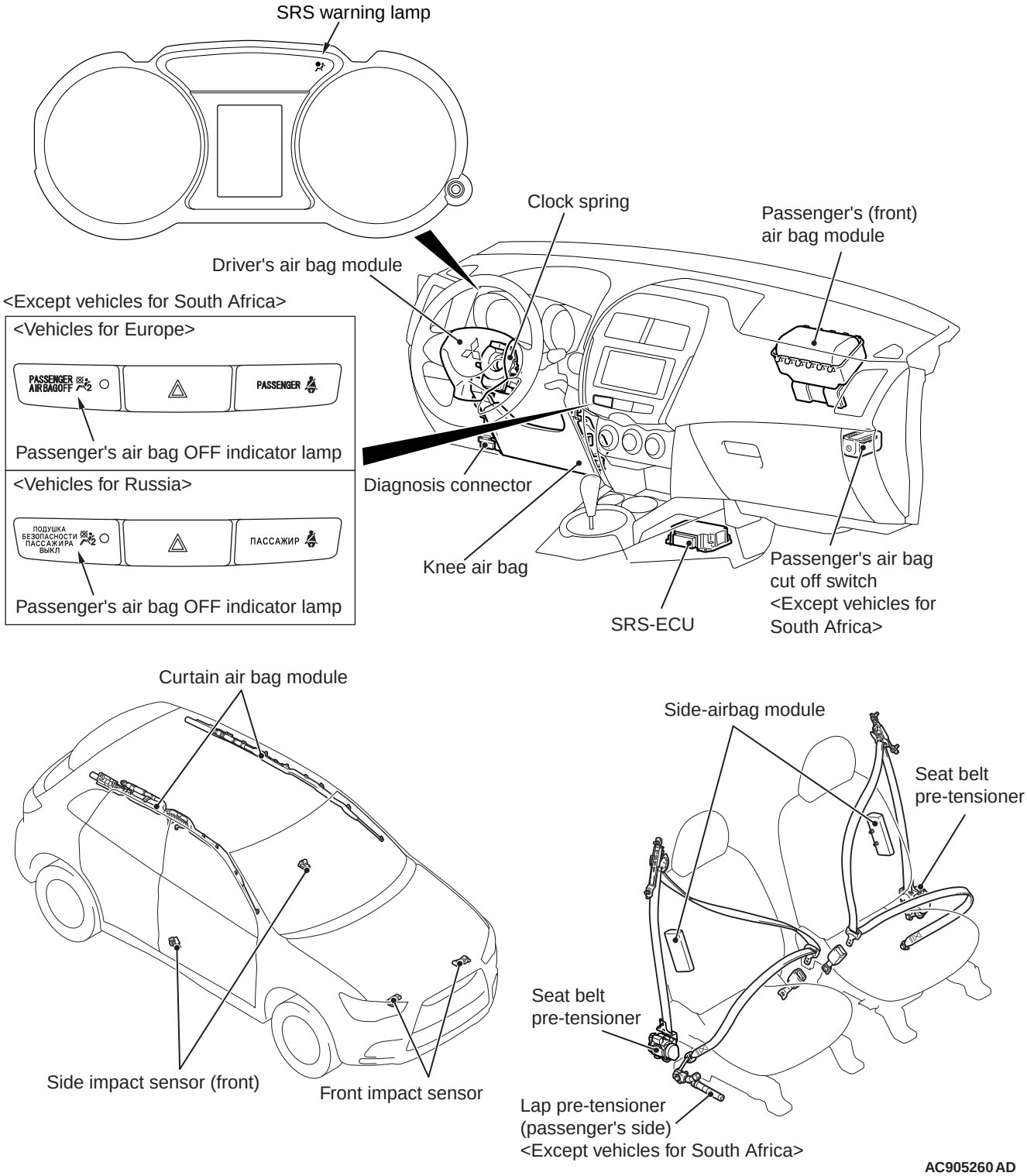
SRS warning lamp
Clock spring
Passenger's (front) air bag module
Driver's air bag module
<Except vehicles for South Africa>
<Vehicles for Europe>
PASSENGER AIRBAGOFF
PASSENGER
Passenger's air bag OFF indicator lamp
<Vehicles for Russia>
ПОДУШКА БЕЗОПАСНОСТИ ПАССАЖИРА ВЫКЛ
ПАССАЖИР
Passenger's air bag OFF indicator lamp
Diagnosis connector
Knee air bag
SRS-ECU
Passenger's air bag cut off switch
<Except vehicles for South Africa>
Curtain air bag module
Side impact sensor (front)
Front impact sensor
Side-airbag module
Seat belt pre-tensioner
Seat belt pre-tensioner
Lap pre-tensioner (passenger's side)
<Except vehicles for South Africa>
AC905260 AD

7.1.5. Airbag

M6160100500068

The Supplemental Restraint System (SRS) and seat belt with pre-tensioner is designed to supplement the driver's and front passenger's seat belts to help reduce the risk or severity of injury to the driver and front passenger by activating and deploying both front air bags in certain frontal collisions. The side-air bag and the curtain air bag are activated when an impact exceeds the threshold upon a side collision, and inflates to protect the heads of the occupants in the front and rear seats.
The SRS consists of air bag modules, SRS air bag control unit (SRS-ECU), two front impact sensors, two side impact sensors, SRS warning lamp, clock spring, passenger’s air bag cut off switch <Except vehicles for South Africa>, passenger’s air bag OFF indicator lamp <Except vehicles for South Africa>, lap pre-tensioner <Except vehicles for South Africa> and seat belt pre-tensioner. Front air bags are located in the centre of the steering wheel and above the glove box. Knee air bag is installed under the column cover. Each air bag is made up of a folded air bag and an inflator unit. Side-airbags are located inside the front seatback assemblies. The curtain air bag module consists of an air bag, an inflator, and the fixing gear relating to those parts, and is installed in the roof side sections (from the driver's and the passenger's front pillars to the rear pillars).The SRS-ECU under the front floor console monitors the system and has a front air bag safing G-sensor, front air bag analogue G-sensor and a side (curtain) air bag safing G-sensor. The front impact sensor is installed on the front end upper bar in the engine room and contains an analogue G-sensor and a microcomputer. The side impact sensor is installed in the lower parts of the centre pillars and contains an analogue G-sensor and a microcomputer. The warning lamp on the instrument panel indicates the operational status of the SRS. The clock spring is installed in the steering column. The passenger’s air bag cut off switch is located above inside the glove box. The passenger’s air bag OFF indicator lamp is installed in centre panel assembly. The lap pre-tensioner has been installed on the outer seat belt lower anchor side. The seat belt pre-tensioner is built into the driver's and passenger's front seat belt retractor.
Only authorized service personnel should do work on or around the SRS components. Those service personnel should read this manual carefully before starting any such work.

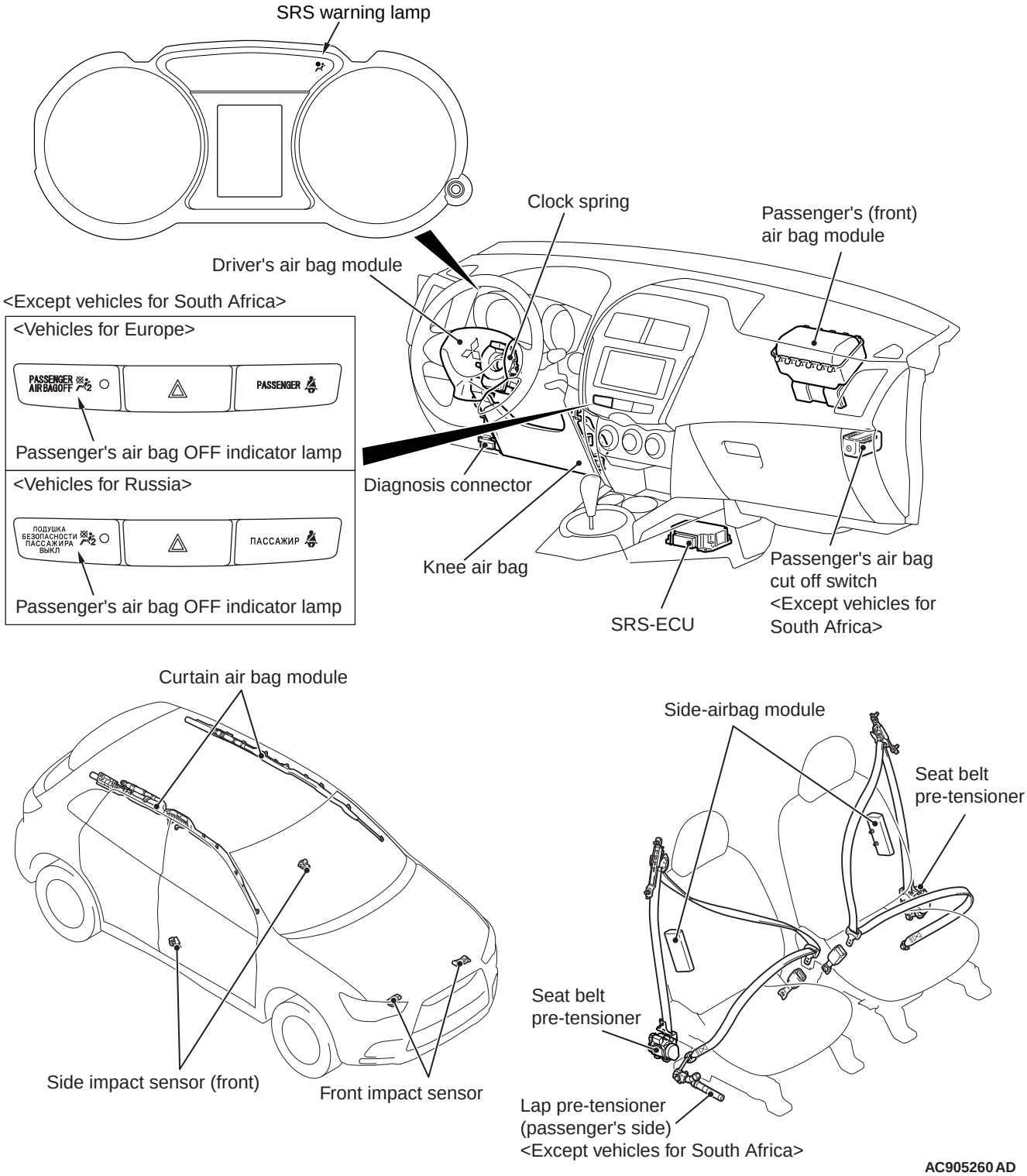
SRS warning lamp
Clock spring
Passenger's (front) air bag module
Driver's air bag module
<Except vehicles for South Africa>
<Vehicles for Europe>
PASSENGER AIRBAGOFF
PASSENGER
Passenger's air bag OFF indicator lamp
<Vehicles for Russia>
ПОДУШКА БЕЗОПАСНОСТИ ПАССАЖИРА ВЫКЛ
ПАССАЖИР
Passenger's air bag OFF indicator lamp
Diagnosis connector
Knee air bag
SRS-ECU
Passenger's air bag cut off switch
<Except vehicles for South Africa>
Curtain air bag module
Side impact sensor (front)
Front impact sensor
Side-airbag module
Seat belt pre-tensioner
Seat belt pre-tensioner
Lap pre-tensioner (passenger's side)
<Except vehicles for South Africa>
AC905260 AD

7.1.6. SRS Systems

M6160100600065

The Supplemental Restraint System (SRS) and seat belt with pre-tensioner is designed to supplement the driver's and front passenger's seat belts to help reduce the risk or severity of injury to the driver and front passenger by activating and deploying both front air bags in certain frontal collisions. The side-air bag and the curtain air bag are activated when an impact exceeds the threshold upon a side collision, and inflates to protect the heads of the occupants in the front and rear seats.
The SRS consists of air bag modules, SRS air bag control unit (SRS-ECU), two front impact sensors, two side impact sensors, SRS warning lamp, clock spring, passenger’s air bag cut off switch <Except vehicles for South Africa>, passenger’s air bag OFF indicator lamp <Except vehicles for South Africa>, lap pre-tensioner <Except vehicles for South Africa> and seat belt pre-tensioner. Front air bags are located in the centre of the steering wheel and above the glove box. Knee air bag is installed under the column cover. Each air bag is made up of a folded air bag and an inflator unit. Side-airbags are located inside the front seatback assemblies. The curtain air bag module consists of an air bag, an inflator, and the fixing gear relating to those parts, and is installed in the roof side sections (from the driver's and the passenger's front pillars to the rear pillars).The SRS-ECU under the front floor console monitors the system and has a front air bag safing G-sensor, front air bag analogue G-sensor and a side (curtain) air bag safing G-sensor. The front impact sensor is installed on the front end upper bar in the engine room and contains an analogue G-sensor and a microcomputer. The side impact sensor is installed in the lower parts of the centre pillars and contains an analogue G-sensor and a microcomputer. The warning lamp on the instrument panel indicates the operational status of the SRS. The clock spring is installed in the steering column. The passenger’s air bag cut off switch is located above inside the glove box. The passenger’s air bag OFF indicator lamp is installed in centre panel assembly. The lap pre-tensioner has been installed on the outer seat belt lower anchor side. The seat belt pre-tensioner is built into the driver's and passenger's front seat belt retractor.
Only authorized service personnel should do work on or around the SRS components. Those service personnel should read this manual carefully before starting any such work.

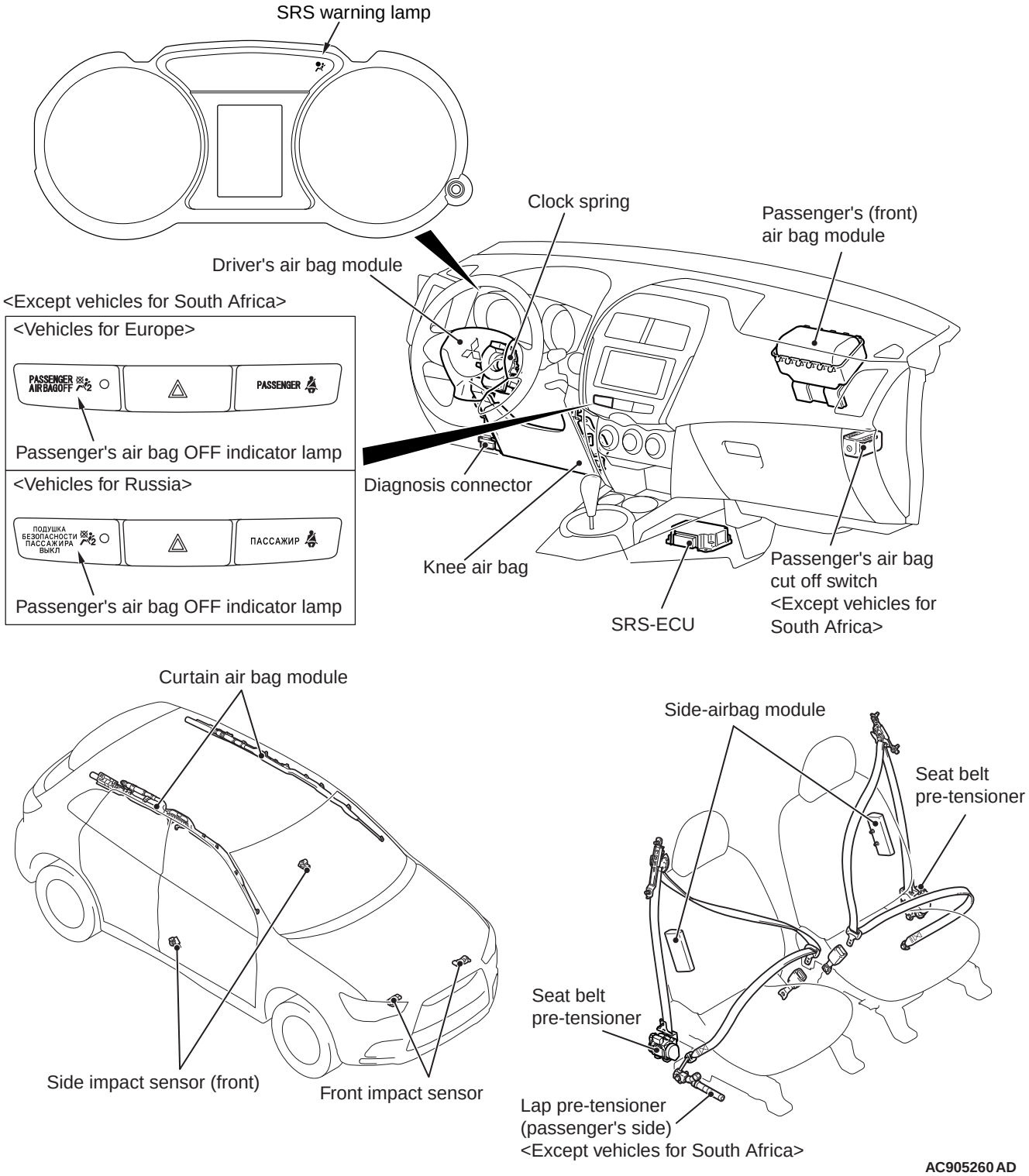
SRS warning lamp
Clock spring
Passenger's (front) air bag module
Driver's air bag module
<Except vehicles for South Africa>
<Vehicles for Europe>
PASSENGER AIRBAGOFF
PASSENGER
Passenger's air bag OFF indicator lamp
<Vehicles for Russia>
ПОДУШКА БЕЗОПАСНОСТИ ПАССАЖИРА ВЫКЛ
ПАССАЖИР
Passenger's air bag OFF indicator lamp
Diagnosis connector
Knee air bag
SRS-ECU
Passenger's air bag cut off switch <Except vehicles for South Africa>
Curtain air bag module
Side impact sensor (front)
Front impact sensor
Side-airbag module
Seat belt pre-tensioner
Seat belt pre-tensioner
Lap pre-tensioner (passenger's side) <Except vehicles for South Africa>
AC905260 AD

7.2. Fire extinguisher (X)2

M6169200000089

"Not Applicable"

7.3. Locks and anti-theft device

M6169300000064

"Not Applicable"

7.4. Warning triangle (if required) (X)2

M6169400000061

"Not Applicable"

7.5. First aid kit. (if required) (X)2

M6169500000068

"Not Applicable"

7.6. Wheel chocks (wedges) (if required) (X)2

M6169600000065

"Not Applicable"

7.7. Audible warning device

M6169700000062

"Not Applicable"

7.8. Speedometer

M6169800000069

"Not Applicable"

7.9. Tachograph (if fitted/required)

M6169900000066

"Not Applicable"

7.10. Speed limitation device (if fitted/required)

M6161100000066

"Not Applicable"

7.11 Odometer if available (X)2

M6160200000060

Visual Inspection

Check the odometer for displaying the total traveling distance of vehicle.

<Standard meter>

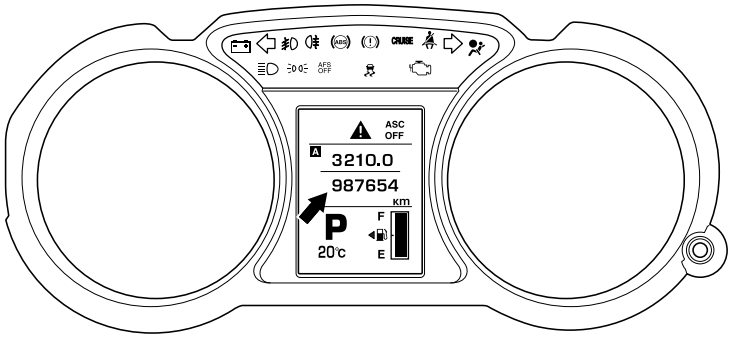

ACI02102 AB

<High contrast meter>

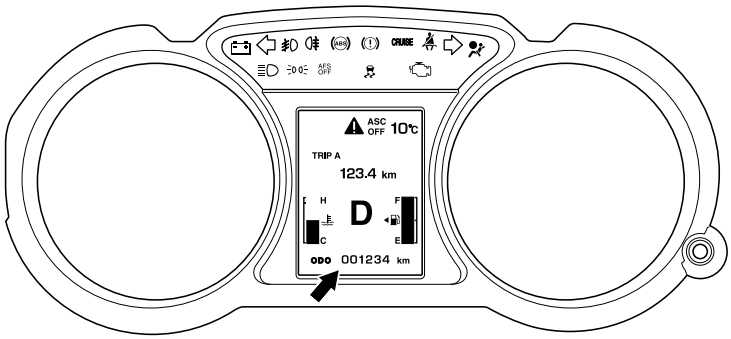

ACI02101AB

7.12 Electronic Stability Control (ESC) if fitted/required

M6161200000063

ABS WARNING LAMP AND BRAKE WARNING LAMP CHECK

Check that ABS and brake warning lamps illuminate as follows.

NOTE: The EBD warning lamp is also used as the brake warning lamp.

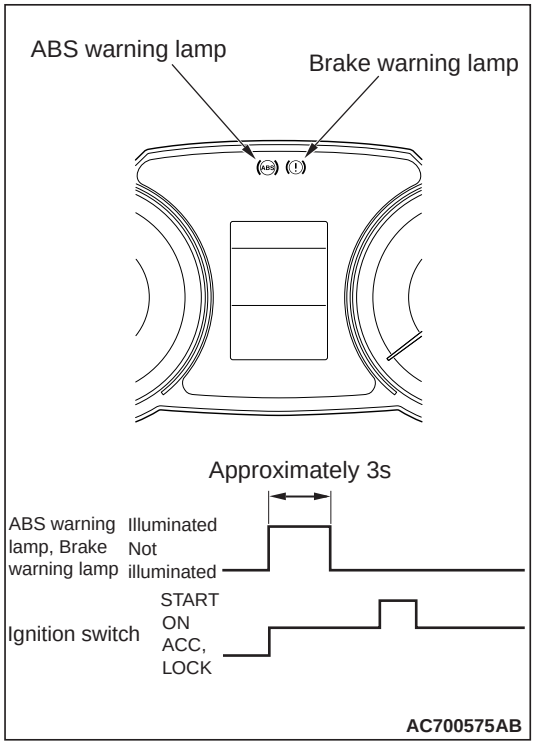

1. When the ignition switch is turned to the ON position, ABS and brake warning lamps illuminate.
2. The ABS and brake warning lamps illuminate for three seconds[*1] and then turn OFF[*2].
3. Otherwise, check the diagnosis code.

NOTE:

- *[*1]: The ABS warning lamp may stay ON until the vehicle speed reaches 10 km/h. As far as ABS-ECU stores any diagnosis code related to the wheel speed sensor malfunction or the motor malfunction as past trouble, ABS-ECU continues illuminating the ABS warning lamp until it verifies that the malfunction for that code is resolved (startup check).*
- *[*2]: The brake warning lamp does not turn OFF when the parking brake is applied or the brake fluid level is lowered.*

GROUP 8

NUISANCE

CONTENTS

8.1. NOISE 8-2
8.1.1 Noise suppression system 8-2

8.2. EXHAUST EMISSIONS. 8-2
8.2.1 Positive ignition engine emissions . . . 8-2
8.2.1.1 Exhaust emissions control equipment 8-2
8.2.1.2 Gaseous emissions. 8-3
8.2.2 Compression ignition engine emissions 8-7
8.2.2.1 Exhaust emission control equipment 8-7
8.2.2.2 Opacity 8-10

8.3. ELECTROMAGNETIC INTERFERENCE SUPPRESSION. 8-12

8.4. OTHER ITEMS RELATED TO THE ENVIRONMENT 8-12
8.4.1. Fluid leaks 8-12

8.1. Noise

8.1.1 Noise suppression system

M6170100100061

"Query raised for this content"

8.2. Exhaust emissions

8.2.1 Positive ignition engine emissions

8.2.1.1 Exhaust emissions control equipment

M6170200200139

CONSTRUCTION DIAGRAM

<Engine room side>

<4B1>

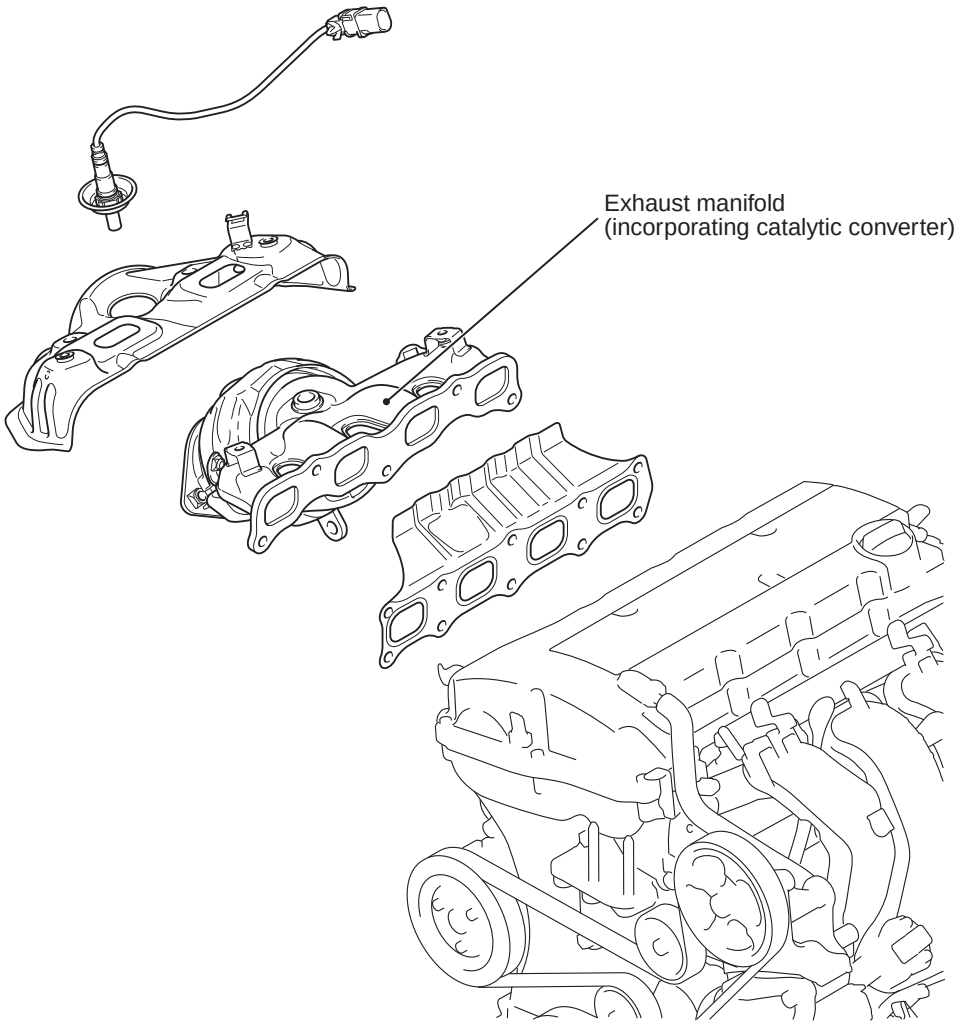

ACI02053 AB

<Under floor side>

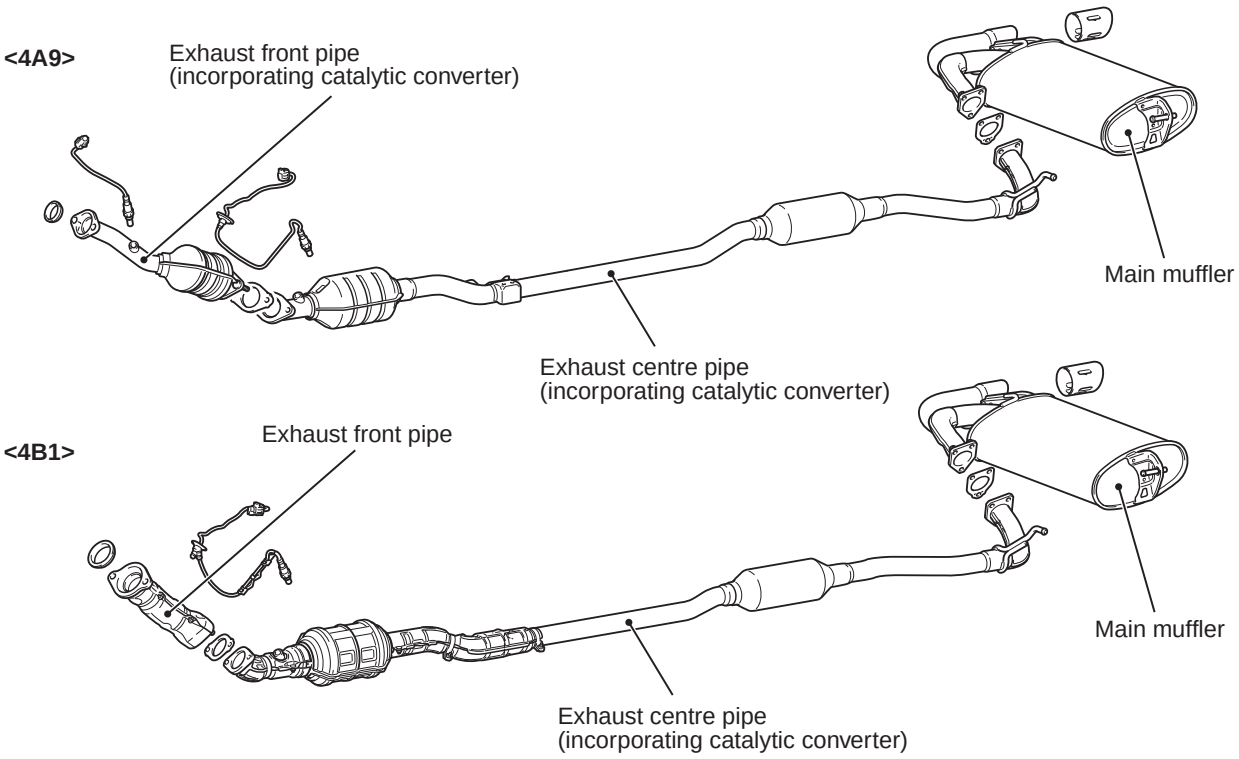

ACI02264 AB

8.2.1.2 Gaseous emissions

M6170200300062

PRE-INSPECTION CONDITION

"Pre-inspection condition" refers to the condition that the vehicle must be in before proper engine inspection can be carried out. If you see the words "Set the vehicle to the pre-inspection condition". In this manual, it means to set the vehicle to the following condition.

- Engine coolant temperature 80 to 90°C
- Lamps, electric cooling fan and all accessories: OFF
- M/T: Neutral
- CVT, A/T: P range

IDLE MIXTURE CHECK

<4A9>

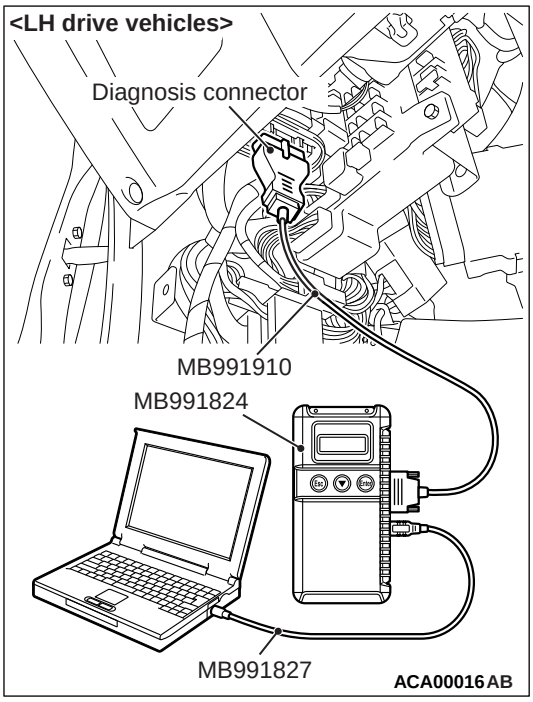

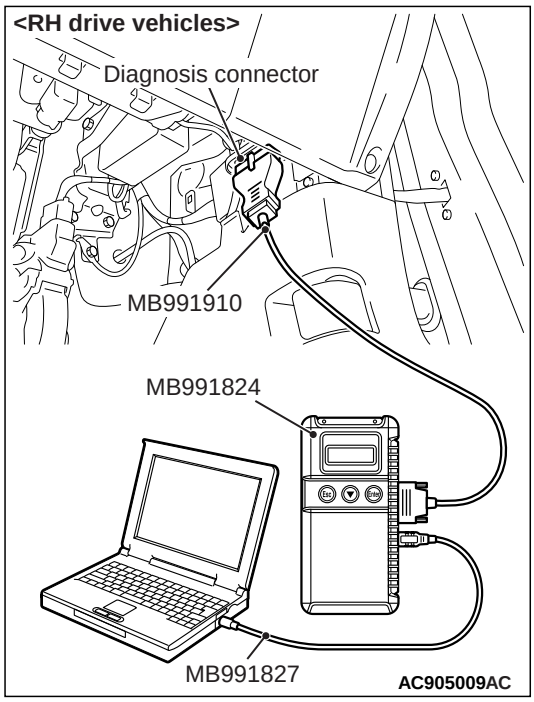

1. Before inspection, set the vehicle to the pre-inspection condition.
2. Turn the ignition switch to "LOCK" (OFF) position.
3. Connect the M.U.T.-III to the diagnosis connector.

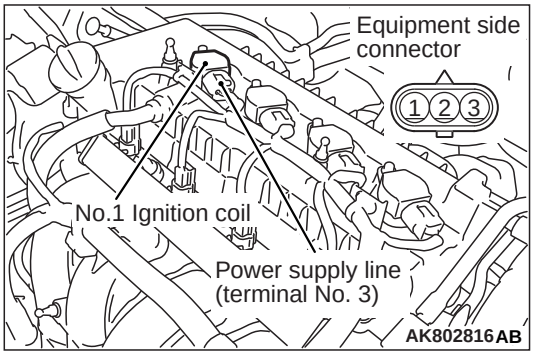

4. Set the timing light to the power supply line (terminal No. 3) of the ignition coil No. 1.

   NOTE: The power supply line is looped and also longer than the other ones.
5. Start the engine and let it run at idle.
6. Check that ignition timing is at the standard value.

   Standard value: approximately 10° BTDC

NOTE:
- *The ignition timing may fluctuate within ±7°. This is normal.*
- *In higher altitude, the ignition timing is more advanced than the standard value by approximately 5°.*
- *Wait till approximately 1 minute passes after the engine started, and check the ignition timing when the engine stabilized.*

7. Run the engine at 2,000 – 3,000 r/min for 2 minutes.
8. Set the CO, HC tester.
9. Check the CO contents and the HC contents at idle.

   Standard value
   CO contents: 0.1 % or less
   HC contents: 100 ppm or less
10. If there is a deviation from the standard value, inspect the MPI system.
11. Remove the timing light and CO, HC tester.
12. Turn the ignition switch to "LOCK" (OFF) position and then disconnect the M.U.T.-III.

<4B1>

1. Before inspection, set the vehicle to the pre-inspection condition.
2. Turn the ignition switch to "LOCK" (OFF) position.

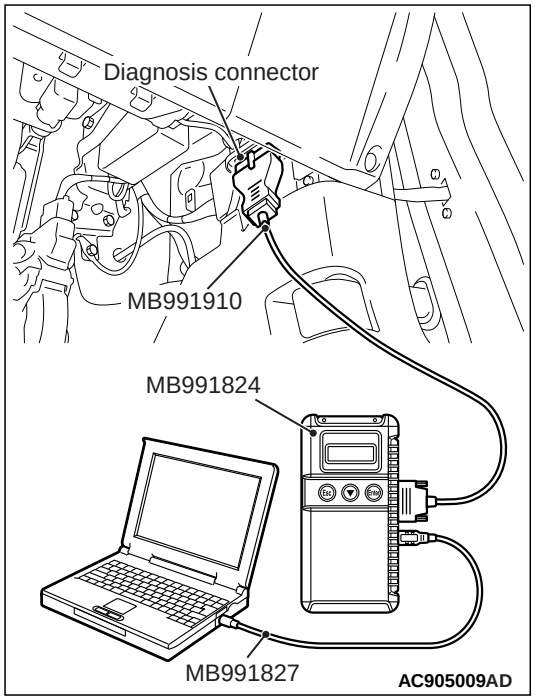

3. Connect the M.U.T.-III to the diagnosis connector.

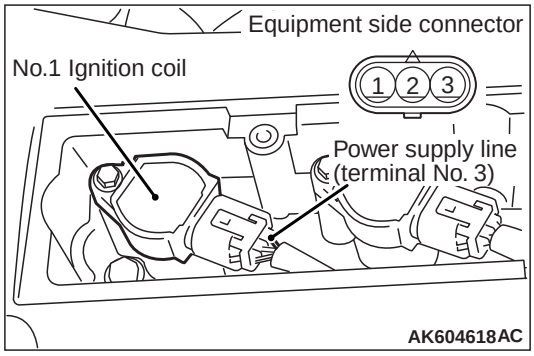

4. Set a timing light to the power supply line (terminal No. 3) of the ignition coil No. 1.
5. Start the engine and let it run at idle.
6. Check that ignition timing is at the standard value.

   Standard value: approximately 10° BTDC

NOTE:

- *The ignition timing may fluctuate within ±7°. This is normal.*
- *In higher altitude, the ignition timing is more advanced than the standard value by approximately 5°.*
- *Wait till approximately 1 minute passes after the engine started, and check the ignition timing when the engine stabilized.*

7. Run the engine at 2,000 – 3,000 r/min for 2 minutes.
8. Set the CO, HC tester.
9. Check the CO contents and the HC contents at idle.

   Standard value
   CO contents: 0.3 % or less
   HC contents: 200 ppm or less

10. If there is a deviation from the standard value, inspect the MPI system.
11. Remove the timing light and CO, HC tester.
12. Turn the ignition switch to "LOCK" (OFF) position and then disconnect the M.U.T.-III.

MULTI USE TESTER (M.U.T.-III) SUB ASSEMBLY

MULTI USE TESTER (M.U.T.-III) sub assembly

Vehicle communication interface (V.C.I.)

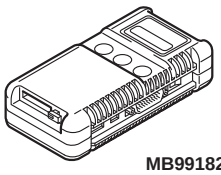

MB991824

M.U.T.-III USB cable

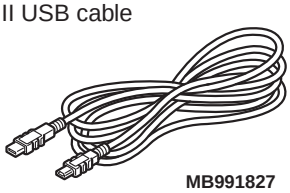

MB991827

M.U.T.-III main harness A

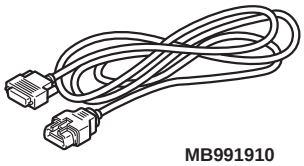

MB991910

M.U.T.-III main harness B

Do not use

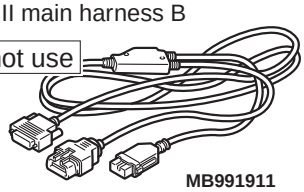

MB991911

M.U.T.-III adapter harness

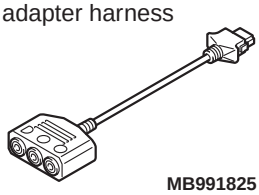

MB991825

M.U.T.-III trigger harness

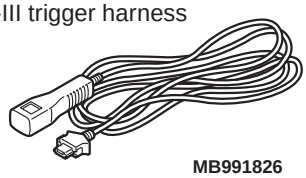

MB991826

AC305090AJ

Refer to the "M.U.T.-III Owner's manual" for instructions on handling the M.U.T.-III.

⚠ CAUTION

Turn the ignition switch to the "LOCK" (OFF) position before connecting or disconnecting the M.U.T.-III.

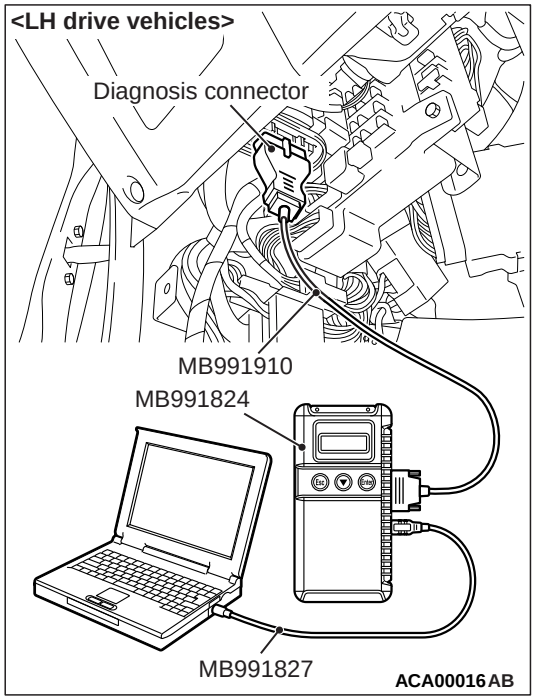

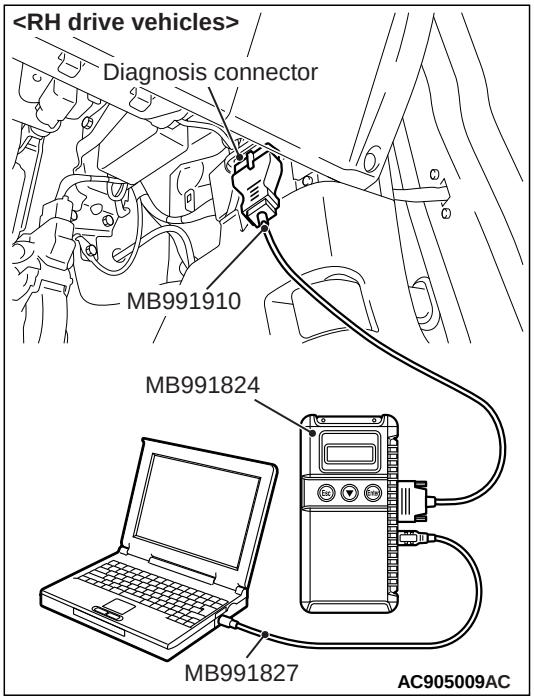

Connect the M.U.T.-III to the diagnosis connector as shown in the illustration.

8.2.2 Compression ignition engine emissions

8.2.2.1 Exhaust emission control equipment

M6170201100124

CONSTRUCTION DIAGRAM

<Engine room side>

<4B1>

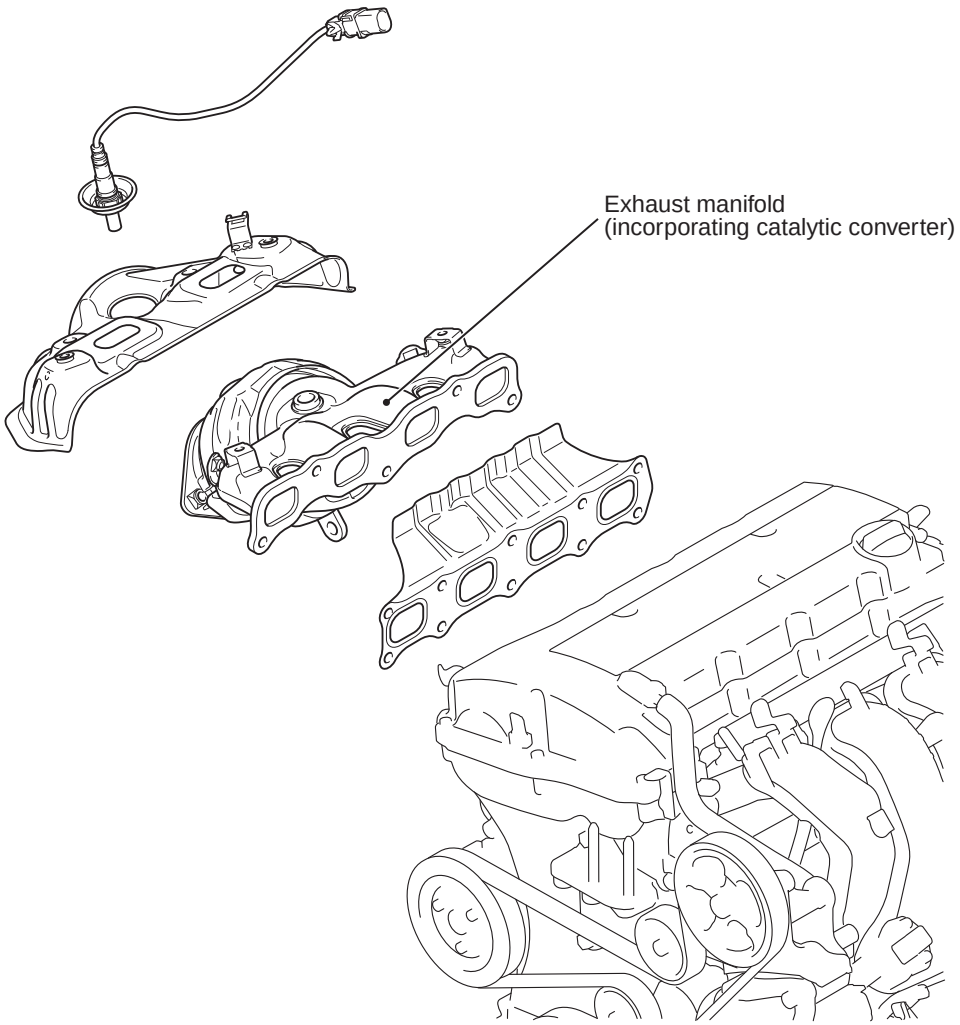

ACI02053 AB

<Under floor side>

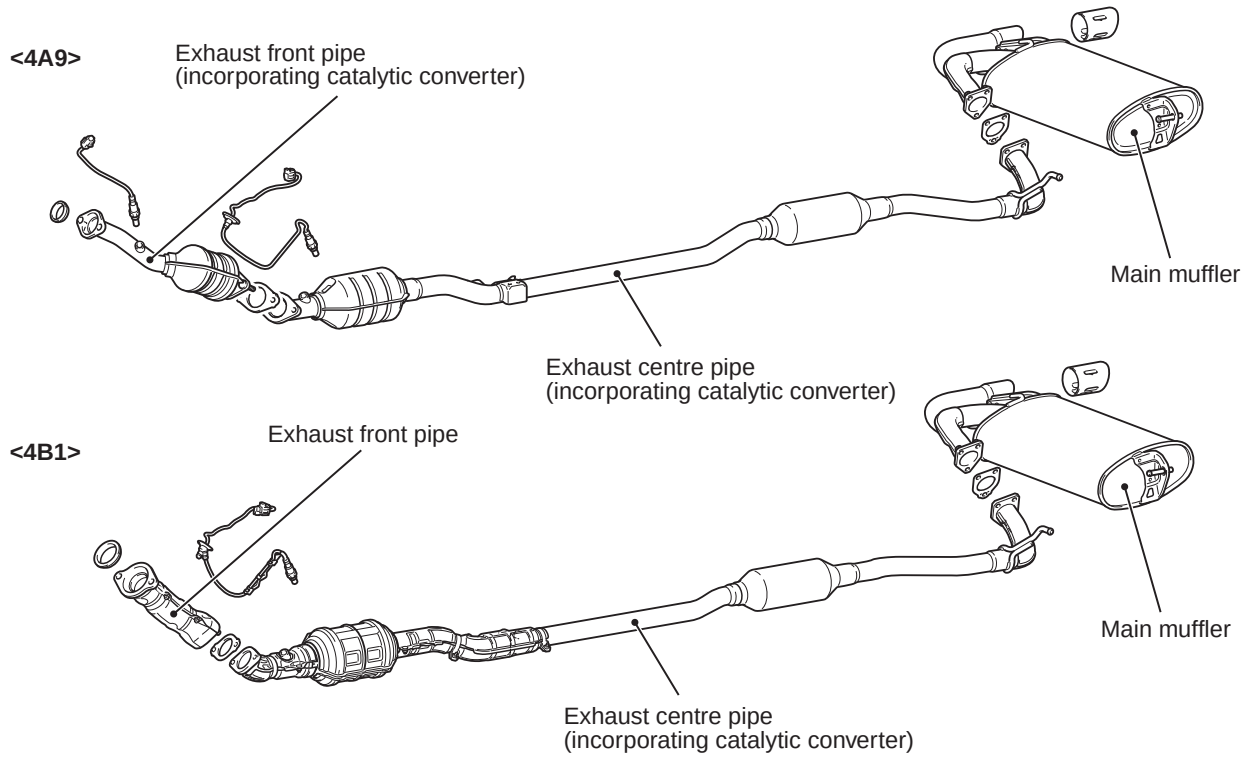

ACI02264 AB

GENERAL INFORMATION (EGR SYSTEM)

The electronically controlled EGR system consists of an EGR valve, engine-ECU and sensors.
The EGR valve aims at reducing the amount of NOx (nitric oxide) discharge that increases with the rise in the exhaust gas temperature. Also, the EGR cooler bypass system is employed. By blocking the exhaust gas flow not to pass through the EGR cooler at the engine cold state, HC (hydrocarbon) emissions are reduced. Thus, the engine-ECU optimally controls the exhaust gas temperature in accordance with the operating conditions of the engine.

To further improve the exhaust gas reduction performance, the system provides the engine-ECU feedback on the EGR valve opening. Thus, it effects EGR control to optimize the operating conditions of the engine.

SYSTEM DIAGRAM (EGR SYSTEM)

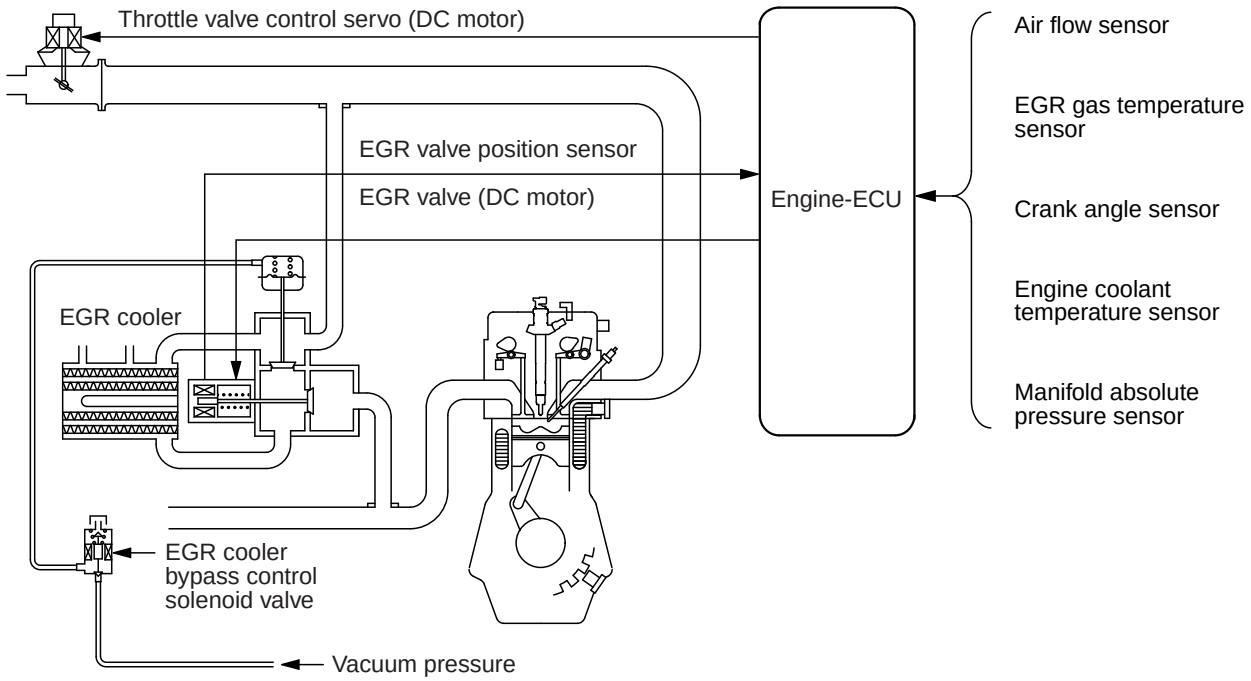

AK802887AC

COMPONENT LOCATION (EGR SYSTEM)

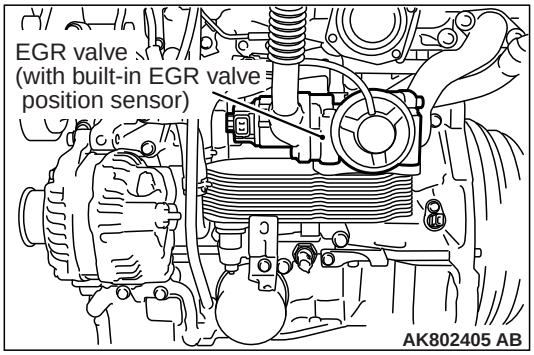

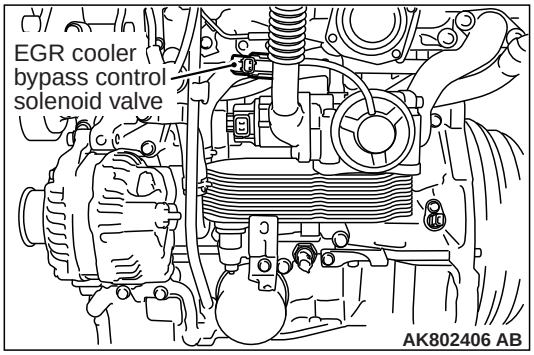

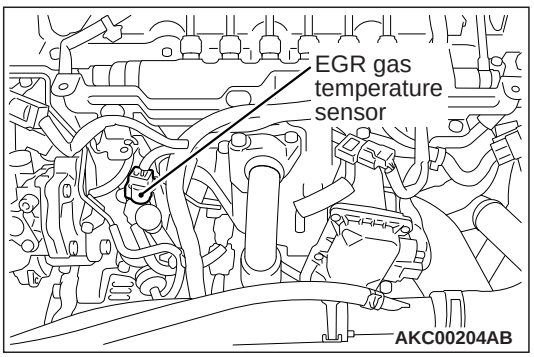

8.2.2.2 Opacity

M6170201200068

PRE-INSPECTION CONDITION

"Pre-inspection condition" refers to the condition that the vehicle must be in before proper engine inspection can be carried out. If you see the words "Set the vehicle to the pre-inspection condition". In this manual, it means to set the vehicle to the following condition.

- Engine coolant temperature 80 to 90°C
- Lamps, electric cooling fan and all accessories: OFF
- M/T: Neutral
- CVT, A/T: P range

MULTI USE TESTER (M.U.T.-III) SUB ASSEMBLY

MULTI USE TESTER (M.U.T.-III) sub assembly

Vehicle communication interface (V.C.I.)

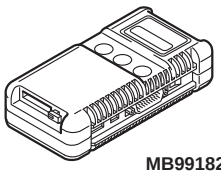

MB991824

M.U.T.-III USB cable

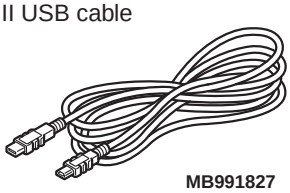

MB991827

M.U.T.-III main harness A

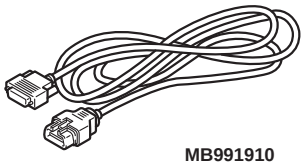

MB991910

M.U.T.-III main harness B

Do not use

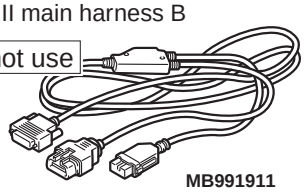

MB991911

M.U.T.-III adapter harness

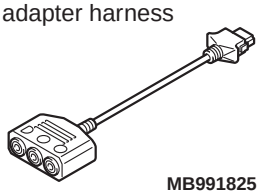

MB991825

M.U.T.-III trigger harness

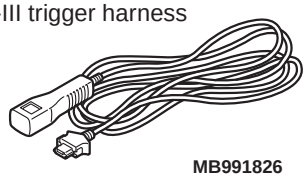

MB991826

AC305090AJ

Refer to the "M.U.T.-III Owner's manual" for instructions on handling the M.U.T.-III.

⚠ CAUTION

Turn the ignition switch to the "LOCK" (OFF) position before connecting or disconnecting the M.U.T.-III.

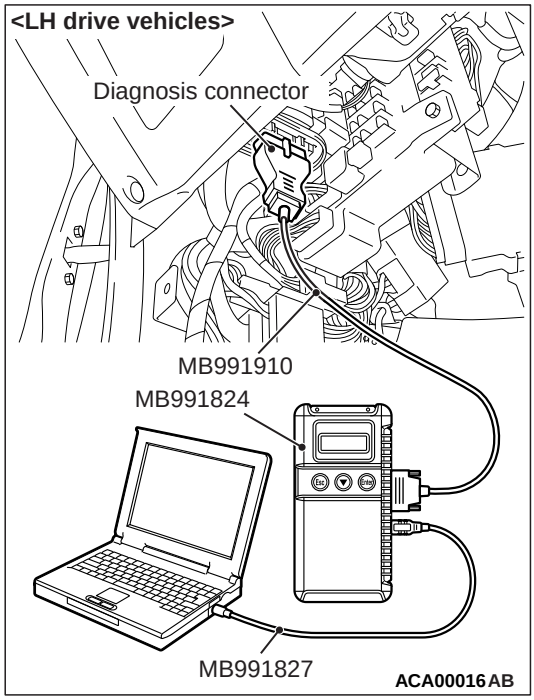

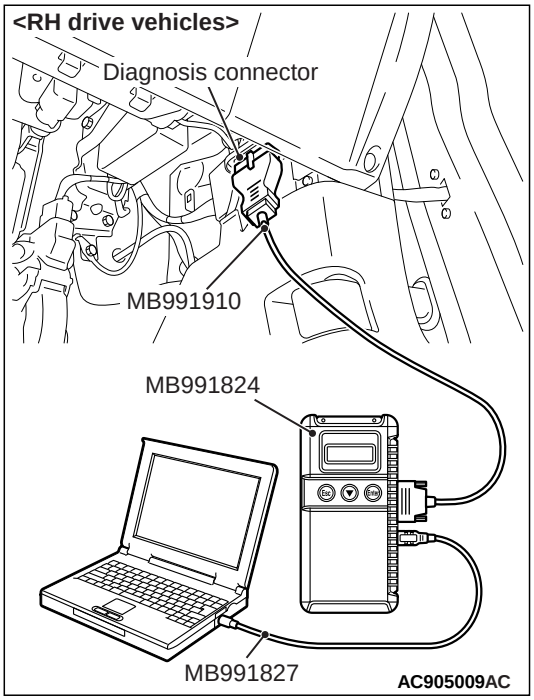

Connect the M.U.T.-III to the diagnosis connector as shown in the illustration.

8.3. Electromagnetic interference suppression

M6170300000079

"Not Applicable"

8.4. Other items related to the environment

8.4.1. Fluid leaks

M6170400100062

"Not Applicable"

GROUP 9

SUPPLEMENTARY TESTS FOR PASSENGER-CARRYING VEHICLES CATEGORIES M2, M3

CONTENTS

9.1. DOORS 9-3
9.1.1. Entrance and exit doors 9-3
9.1.2. Emergency exits 9-3

9.2. DEMISTING AND DEFROSTING SYSTEM (X)2 9-3

9.3. VENTILATION & HEATING SYSTEM (X)2 9-3

9.4. SEATS. 9-3
9.4.1. Passenger seats (including seats for accompanying personnel) 9-3
9.4.2. Driver's seat (additional requirements) 9-3

9.5. INTERIOR LIGHTING AND DESTINATION DEVICES (X)2 9-3

9.6. GANGWAYS, STANDING AREAS 9-3

9.7. STAIRS AND STEPS. 9-3

9.8. PASSENGER COMMUNICATION SYSTEM (X)2 9-3

9.9. NOTICES (X)2 9-3

9.10. REQUIREMENTS REGARDING THE TRANSPORTATION OF CHILDREN. (X)2 9-4
9.10.1. Doors 9-4
9.10.2. Signalling and special equipment . . 9-4

9.11. REQUIREMENTS REGARDING THE TRANSPORTATION OF PERSONS WITH REDUCED MOBILITY (X)2. 9-4

9.11.1. Doors, ramps and lifts 9-4
9.11.2. Wheelchair restraint system 9-4
9.11.3. Signalling and special equipment . . 9-4

9.12. OTHER SPECIAL EQUIPMENT (X)2

. 9-4
9.12.1. Installations for food preparation . . . 9-4
9.12.2. Sanitary installation 9-4
9.12.3. Other devices (e.g. audio-visual systems) 9-4

9.1. Doors

9.1.1. Entrance and exit doors

M6180100100062

"Not Applicable"

9.1.2. Emergency exits

M6180100200069

"Not Applicable"

9.2. Demisting and defrosting system (X)2

M6180200000062

"Not Applicable"

9.3. Ventilation & heating system (X)2

M6180300000069

"Not Applicable"

9.4. Seats

9.4.1. Passenger seats (including seats for accompanying personnel)

M6180400100063

"Not Applicable"

9.4.2. Driver's seat (additional requirements)

M6180400200060

"Not Applicable"

9.5. Interior lighting and destination devices (X)2

M6180500000063

"Not Applicable"

9.6. Gangways, standing areas

M6180600000060

"Not Applicable"

9.7. Stairs and steps

M6180700000067

"Not Applicable"

9.8. Passenger communication system (X)2

M6180800000064

"Not Applicable"

9.9. Notices (X)2

M6180900000061

"Not Applicable"

9.10. Requirements regarding the transportation of children. (X)2

9.10.1. Doors

M6181000100068

"Not Applicable"

9.10.2. Signalling and special equipment

M6181000200065

"Not Applicable"

9.11. Requirements regarding the transportation of persons with reduced mobility (X)2

9.11.1. Doors, ramps and lifts

M6181100100065

"Not Applicable"

9.11.2. Wheelchair restraint system

M6181100200062

"Not Applicable"

9.11.3. Signalling and special equipment

M6181100300069

"Not Applicable"

9.12. Other special equipment (X)2

9.12.1. Installations for food preparation

M6181200100062

"Not Applicable"

9.12.2. Sanitary installation

M6181200200069

"Not Applicable"

9.12.3. Other devices (e.g. audio-visual systems)

M6181200300066

"Not Applicable"