GROUP 1

BRAKING EQUIPMENT

CONTENTS

1.1. MECHANICAL CONDITION AND OPERATION 1-2

1.1.1. Service brake pedal/hand lever pivot 1-2

1.1.2. Pedal/hand lever condition and travel of the brake operating device 1-2

1.1.3. Vacuum pump or compressor and reservoirs 1-2

1.1.4. Low pressure warning gauge or indicator 1-2

1.1.6. Parking brake activator, lever control, parking brake ratchet, electronic parking brake 1-2

1.1.8. Couplings for trailer brakes (electrical & pneumatic) 1-2

1.1.9. Energy storage reservoir pressure tank 1-2

1.1.11. Rigid brake pipes 1-2

1.1.12. Flexible brake hoses 1-2

1.1.13. Brake linings and pads 1-3

1.1.14. Brake drums, brake discs 1-3

1.1.15. Brake cables, rods, levers, linkages 1-5

1.1.16. Brake actuators (including spring brakes or hydraulic cylinders) 1-5

1.1.17. Load sensing valve 1-5

1.1.18. Slack adjusters and indicators 1-5

1.1.19. Endurance braking system (where fitted or required) 1-6

1.1.20. Automatic operation of trailer brakes 1-6

1.1.22. Test connections (where fitted or required) 1-6

1.1.23. Overrun brake 1-6

1.2 SERVICE BRAKING PERFORMANCE AND EFFICIENCY 1-6

1.2.1. Performance 1-6

1.2.2. Efficiency 1-6

1.3. SECONDARY (EMERGENCY) BRAKING PERFORMANCE AND EFFICIENCY (IF MET BY SEPARATE SYSTEM) 1-6

1.3.1. Performance 1-6

1.3.2. Efficiency 1-6

1.4. PARKING BRAKING PERFORMANCE AND EFFICIENCY 1-7

1.4.1. Performance 1-7

1.4.2. Efficiency 1-7

1.5. ENDURANCE BRAKING SYSTEM PERFORMANCE 1-7

1.6. ANTI-LOCK BRAKING SYSTEM (ABS) 1-8

1.7 ELECTRONIC BRAKE SYSTEM (EBS) 1-8

1.8 BRAKE FLUID 1-8

1.1. Mechanical condition and operation

1.1.1. Service brake pedal/hand lever pivot

M6101010100083

"Not Applicable"

1.1.2. Pedal/hand lever condition and travel of the brake operating device

M6101010200080

"Not Applicable"

1.1.3. Vacuum pump or compressor and reservoirs

M6101010300087

"Not Applicable"

1.1.4. Low pressure warning gauge or indicator

M6101010400084

"Not Applicable"

1.1.6. Parking brake activator, lever control, parking brake ratchet, electronic parking brake

M6101000100082

GENERAL

A parking brake lever is used to operate the mechanical rear-wheel acting type parking brake.

CONSTRUCTION DIAGRAM

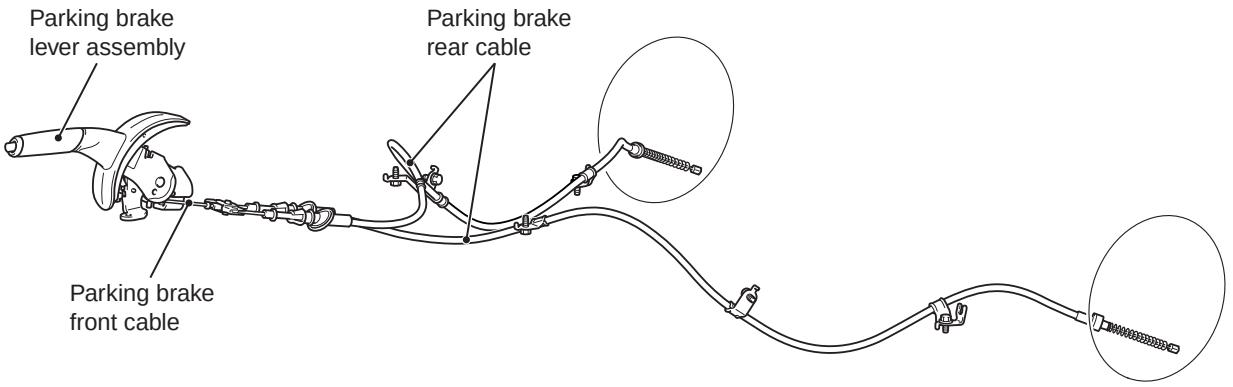

AC901580AB

1.1.8. Couplings for trailer brakes (electrical & pneumatic)

M6101010800082

"Not Applicable"

1.1.9. Energy storage reservoir pressure tank

M6101010900089

"Not Applicable"

1.1.11. Rigid brake pipes

M6101011100086

"Not Applicable"

1.1.12. Flexible brake hoses

M6101011200083

"Not Applicable"

1.1.13. Brake linings and pads

M6101000200089

BRAKE PAD CHECK

⚠ CAUTION

If there is a significant difference in thickness between the brake pads at right and left, check the sliding area of the brake caliper and the brake disc runout.

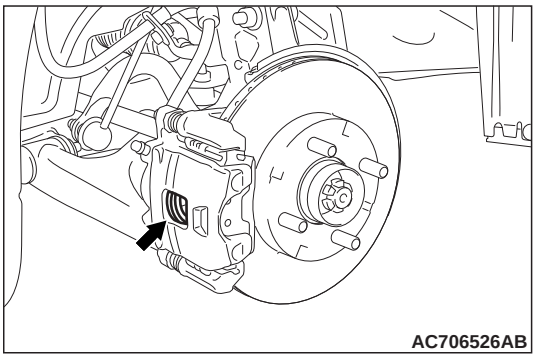

1. Visually check the thickness of brake pad from the inspection hole of the caliper body.

   Standard value: 10.0 mm
   Limit value: 2.0 mm

2. When the thickness is lower than the limit value, replace both brake pads (right and left) as a set.

BRAKE LINING THICKNESS CHECK

1. Remove the brake drum.

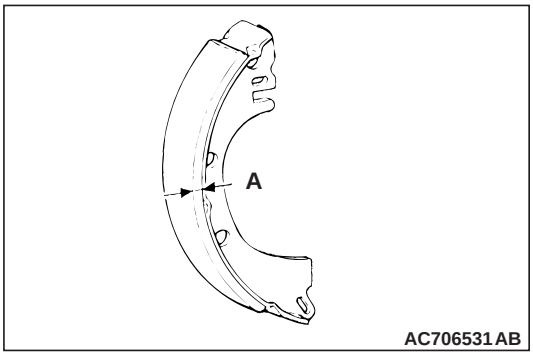

2. Measure the thickness of the brake lining at the area with the worst wear.

   Standard value (A): 4.0 mm
   Limit value (A): 1.0 mm

⚠ CAUTION

If there is a significant difference in thickness between the shoe and lining assemblies in right and left, check the sliding status of the piston.

3. If the thickness of brake lining is less than the limit value, replace both the shoe and lining assemblies as a complete axle set.

1.1.14. Brake drums, brake discs

M6101000300105

BRAKE DISC CHECK

BRAKE DISC THICKNESS CHECK

1. Remove contaminants or corrosion from the brake disc surface.

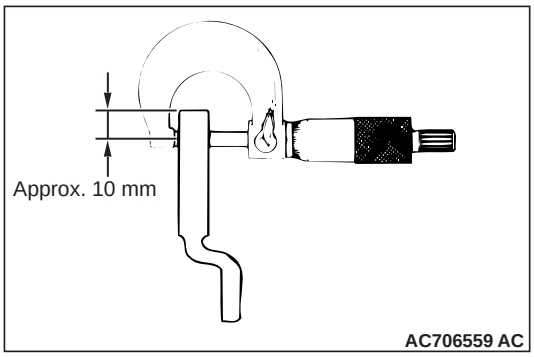

2. Use a micrometer to measure the brake disc thickness at minimum eight points which are 10 mm inward from its circumference.

   Standard value: 17.0 mm
   Limit value: 15.4 mm

3. If the brake disc thickness is worn beyond the limit value at more than one point, replace the brake disc and check its runout.

BRAKE DISC THICKNESS UNEVENNESS CHECK AND CORRECTION

1. Remove contaminants or corrosion from the brake disc surface.

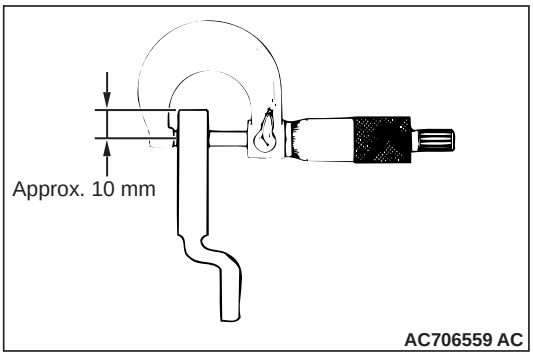

2. Use a micrometer to measure the brake disc thickness at minimum eight points which are 10 mm inward from its circumference. Then record the measurements.

3. If the brake disc thickness unevenness (the difference between the maximum and minimum values measured above) is 0.015 mm or less, it is within the standard value.
4. If the brake disc thickness unevenness exceeds the standard value, grind it according to the procedure below while it is mounted on the vehicle.

   NOTE: If it is suspected that the brake disc thickness will become less than the limit value after the grinding, replace the brake disc and check its runout.

   (1) Check for wheel bearing looseness in the axial direction.

⚠ CAUTION

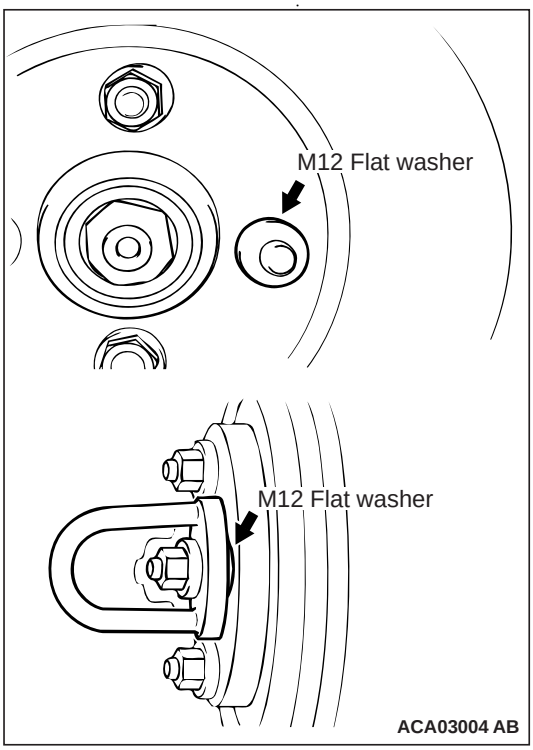

Insert M12 plain washer and then install the adapter as shown before grinding. Failure to use the M12 plain washer will cause the brake disc to be deformed and ground incorrectly.

- **To grind the brake disc, ensure that all the nuts (M12×1.5) are tightened evenly and in a diagonal sequence to the specified torque (100 N·m). Failure to use all the nuts (M12×1.5), excessive or uneven tightening torque will cause the brake disc to deform or judder.**

   (2) Correct the brake disc uneven thickness by grinding it while in place on the vehicle.

BRAKE DISC RUN-OUT CHECK AND CORRECTION

1. Check for wheel bearing looseness in the axial direction.
2. If the axial play is within the limit value, secure the brake disc by tightening the nut (M12×1.5) evenly to the specified torque (100 N·m). If the axial play still exceeds the limit value, replace the wheel bearing. Then secure the brake disc by tightening the nut (M12×1.5) evenly to the specified torque (100 N·m).

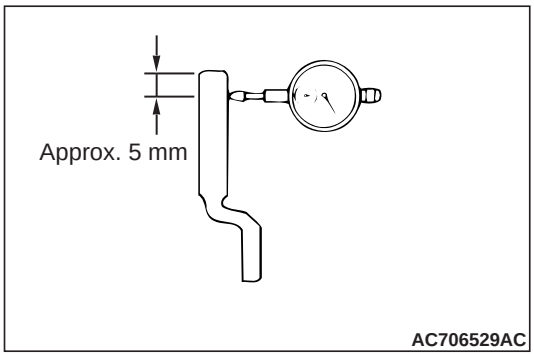

3. Place a dial gauge ca. 5 mm inward from the circumference of the brake disc to measure its runout.

   Limit: 0.06 mm

4. If the brake disc runout exceeds the limit value, rephase the brake disc to the hub so that the minimum brake disc runout is obtained.

⚠ CAUTION

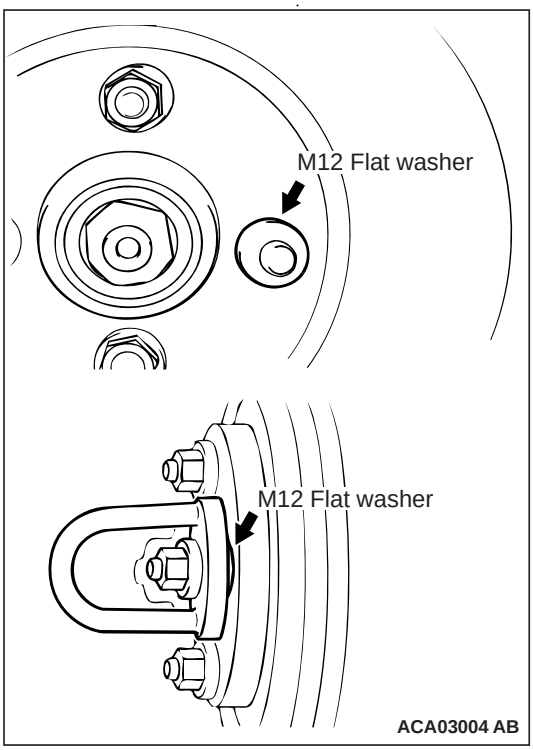

Insert M12 plain washer and then install the adapter as shown before grinding. Failure to use the M12 plain washer will cause the brake disc to be deformed and ground incorrectly.

- **To grind the brake disc, ensure that all the nuts (M12×1.5) are tightened evenly and in a diagonal sequence to the specified torque (100 N·m). Failure to use all the nuts (M12×1.5), excessive or uneven tightening torque will cause the brake disc to deform or judder.**

5. If the brake disc runout exceeds the limit value after rephasing, grind the disc while in place on the vehicle so that the brake disc runout is within the limit value.

NOTE: If it is suspected that the brake disc thickness will be below the limit value, replace the brake disc. Then rephase the brake disc so that the minimum brake disc runout is obtained, or grind the disc while in place on the vehicle so that its runout is below the limit value.

BRAKE DRUM INSIDE DIAMETER CHECK

1. Remove the brake drum.

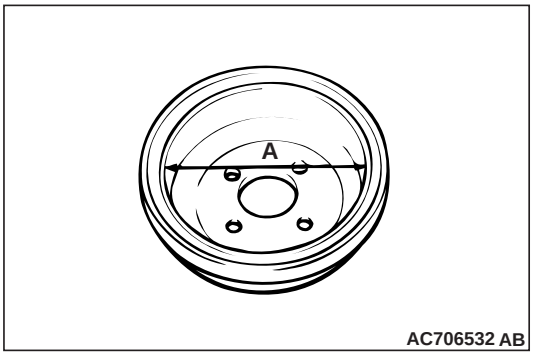

2. Measure the inside diameter of the brake drum at two positions or more.

   Standard value (A): 203.0 mm
   Limit value (A): 205.0 mm

3. If the inside diameter of brake drum is less than the limit value, or if there is a significant uneven wear, replace the brake drum.

1.1.15. Brake cables, rods, levers, linkages

M6101011500084

"Not Applicable"

1.1.16. Brake actuators (including spring brakes or hydraulic cylinders)

M6101011600081

"Not Applicable"

1.1.17. Load sensing valve

M6101011700088

"Not Applicable"

1.1.18. Slack adjusters and indicators

M6101011800085

"Not Applicable"

1.1.19. Endurance braking system (where fitted or required)

M6101011900082

"Not Applicable"

1.1.20. Automatic operation of trailer brakes

M6101012000082

"Not Applicable"

1.1.22. Test connections (where fitted or required)

M6101012200086

"Not Applicable"

1.1.23. Overrun brake

M6101012300083

"Not Applicable"

1.2 Service braking performance and efficiency

1.2.1. Performance

M6102000100085

BRAKE DRAG FORCE CHECK

1. Remove the brake pad assembly, shim, and clip.

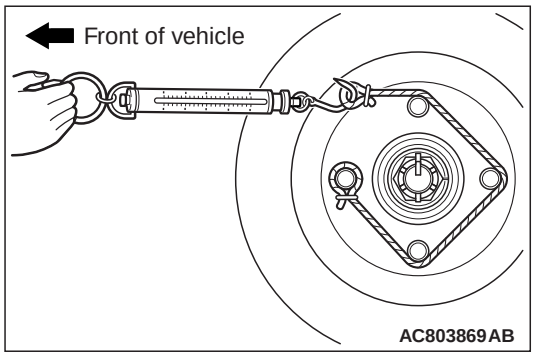

2. Using a spring scale, measure the hub sliding torque in the forward direction with the brake pad, shim and clip removed.
3. Install the brake pad assembly, shim, and clip.
4. Turn the electric motor switch to the "ON" position, and lightly depress the brake pedal two to three times. Then, turn the electric motor switch to the "LOCK" (OFF) position (pedal depressing force: approx. 50 to 100 N).
5. Turn the brake disc forward 10 times.
6. Using a spring scale, measure the hub sliding torque in the forward direction with the brake pad, shim and clip installed.
7. Obtain the disc brake drag force (difference between measured values of item 2 and item 6).

   Standard value: 78 N or less
8. If the brake drag force exceeds the standard value, disassemble the brake caliper assembly to check for fouling/rust on the piston sliding surface and for piston seal deterioration, and confirm whether the guide pin and lock pin slide properly.

1.2.2. Efficiency

M6102010200083

"Not Applicable"

1.3. Secondary (emergency) braking performance and efficiency (if met by separate system)

1.3.1. Performance

M6103000100088

"Not Applicable"

1.3.2. Efficiency

M6103010100089

"Not Applicable"

1.4. Parking braking performance and efficiency

1.4.1. Performance

M6104000100092

BRAKE DRAG FORCE CHECK

1. Remove the brake pad assembly, shim, and clip.

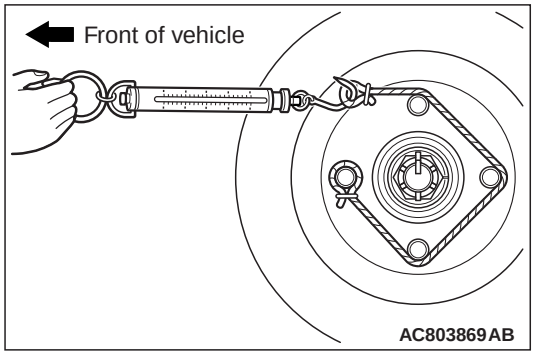

2. Using a spring scale, measure the hub sliding torque in the forward direction with the brake pad, shim and clip removed.
3. Install the brake pad assembly, shim, and clip.
4. Turn the electric motor switch to the "ON" position, and lightly depress the brake pedal two to three times. Then, turn the electric motor switch to the "LOCK" (OFF) position (pedal depressing force: approx. 50 to 100 N).
5. Turn the brake disc forward 10 times.
6. Using a spring scale, measure the hub sliding torque in the forward direction with the brake pad, shim and clip installed.
7. Obtain the disc brake drag force (difference between measured values of item 2 and item 6).

   Standard value: 78 N or less
8. If the brake drag force exceeds the standard value, disassemble the brake caliper assembly to check for fouling/rust on the piston sliding surface and for piston seal deterioration, and confirm whether the guide pin and lock pin slide properly.

1.4.2. Efficiency

M6104010200089

"Not Applicable"

1.5. Endurance braking system performance

M6104500000089

"Not Applicable"

1.6. Anti-lock braking system (ABS)

M6105000000087

ABS WARNING LAMP, ASC WARNING/ OPERATION LAMP AND BRAKE WARNING LAMP CHECK

Check that ABS and brake warning lamps, ASC warning/operation lamp illuminate as follows.

NOTE: The brake warning lamp is used as a warning lamp for parking brake, brake fluid level, brake electric vacuum pump system and EBD control.

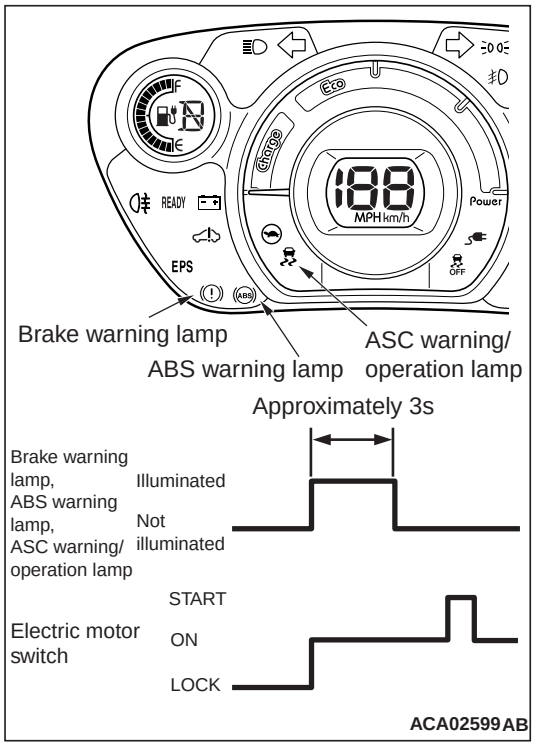

1. When the electric motor switch is turned to the "ON" position, ABS and brake warning lamps, ASC warning/operation lamp illuminate.
2. The ABS and brake warning lamps, ASC warning/ operation lamp illuminate for three seconds[*1] and then turn "OFF"[*2].
3. Otherwise, check the diagnosis code.

NOTE:

- *[*1]: The ABS warning lamp may stay "ON" until the vehicle speed reaches 10 km/h. As far as ABS-ECU stores any diagnosis code related to the wheel speed sensor malfunction or the motor malfunction as past trouble, ABS-ECU continues illuminating the ABS warning lamp until it verifies that the malfunction for that code is resolved (startup check).*
- *[*2]: The brake warning lamp does not turn "OFF" when the parking brake is applied or the brake fluid level is lowered or the brake electric vacuum pump system is troubled.*

1.7 Electronic brake system (EBS)

M6106000000080

"Query raised for this content"

1.8 Brake fluid

M6107000000083

"Not Applicable"

GROUP 2

STEERING

CONTENTS

2.1. MECHANICAL CONDITION 2-2

2.1.1. Steering gear condition 2-2
2.1.2. Steering gear casing attachment . . . 2-2
2.1.3. Steering linkage condition 2-2
2.1.4. Steering linkage operation 2-2
2.1.5. Power steering 2-2

2.2. STEERING WHEEL, COLUMN AND HANDLE BAR 2-2

2.2.1. Steering wheel/handle bar condition . 2-2
2.2.2. Steering column/yokes and forks and steering dampers 2-2

2.3. STEERING PLAY. 2-2

2.4. WHEEL ALIGNMENT (X)2 2-2

2.5. TRAILER STEERED AXLE TURNTABLE 2-2

2.6. ELECTRONIC POWER STEERING (EPS) 2-2

2.1. Mechanical condition

2.1.1. Steering gear condition

M6111000100083

"Not Applicable"

2.1.2. Steering gear casing attachment

M6111010200081

"Not Applicable"

2.1.3. Steering linkage condition

M6111010300088

"Not Applicable"

2.1.4. Steering linkage operation

M6111010400085

"Not Applicable"

2.1.5. Power steering

M6111010500082

"Not Applicable"

2.2. Steering wheel, column and handle bar

2.2.1. Steering wheel/handle bar condition

M6110110100088

"Not Applicable"

2.2.2. Steering column/yokes and forks and steering dampers

M6110110200085

"Not Applicable"

2.3. Steering play

M6110300000084

"Not Applicable"

2.4. Wheel alignment (X)2

M6110400000081

"Not Applicable"

2.5. Trailer steered axle turntable

M6110500000088

"Not Applicable"

2.6. Electronic Power Steering (EPS)

M6110600000085

GENERAL INFORMATION

The electric power steering (EPS+ *) has been adopted which improves the steering feel in all ranges from low to high speed, and enhances the vehicle stability during high speed driving.
This steering system offers the following features:

- The steering gear is mounted on the front suspension frame via the left and right bushings with inner cylinders. This mount method achieves higher rigidity and improves the steering feeling.
- 3-spoke type steering wheel integrated with an SRS airbag has been adopted.

- Shock absorbing mechanism has been adopted with the steering column assembly.

*NOTE: *: EPS+ (Electric Power Steering Plus)*

SPECIFICATIONS

Items		Specifications
Steering wheel	Shape	3-spoke type
	Outside diameter mm	375
	Maximum number of turns	3.49
Power steering type		Electric control type
Steering gear and linkage	Type	Rack & pinion type
	Stroke ratio (rack stroke/number of steering wheel rotation) mm/rev	41.08
	Rack stroke mm	143.4
Steering angle	Inner wheel	45°
	Outer wheel	38°

CONSTRUCTION DIAGRAM

<LHD>

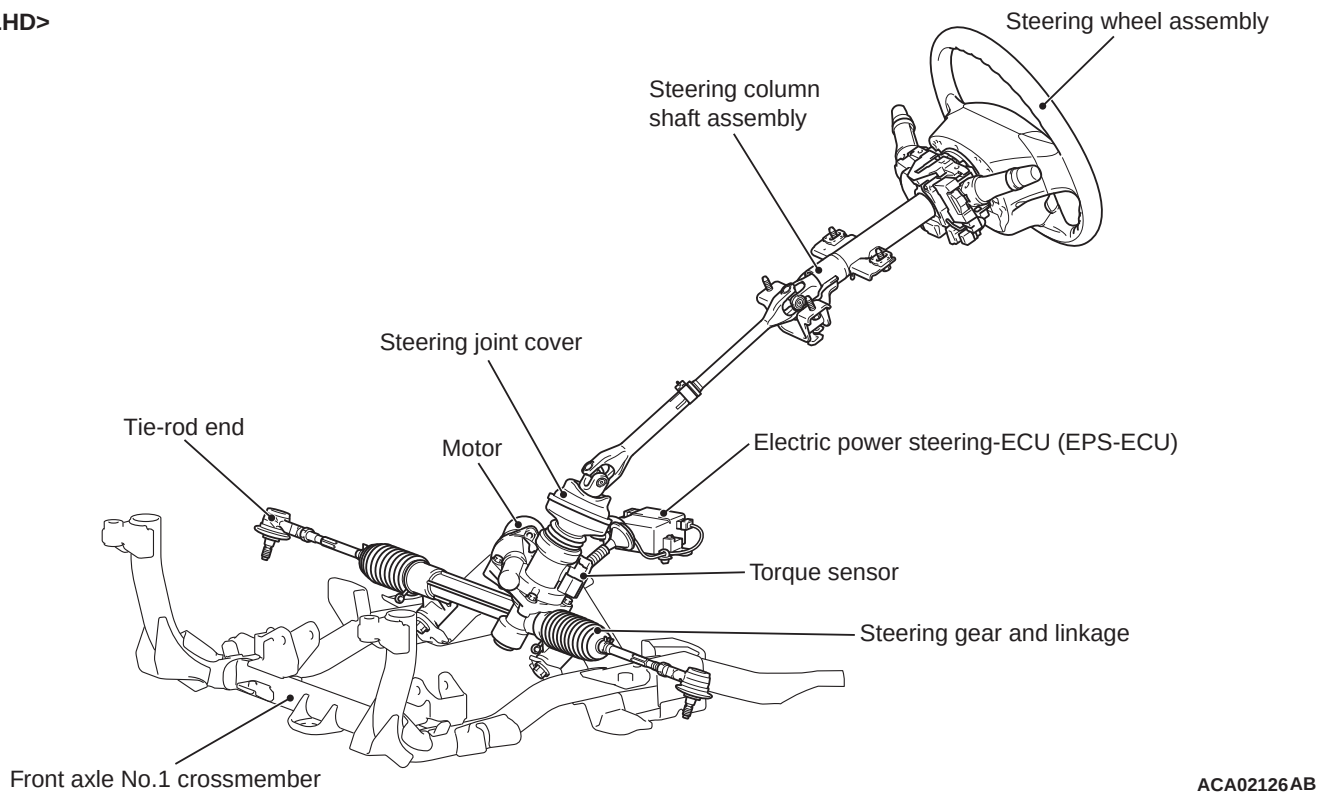

<RHD>

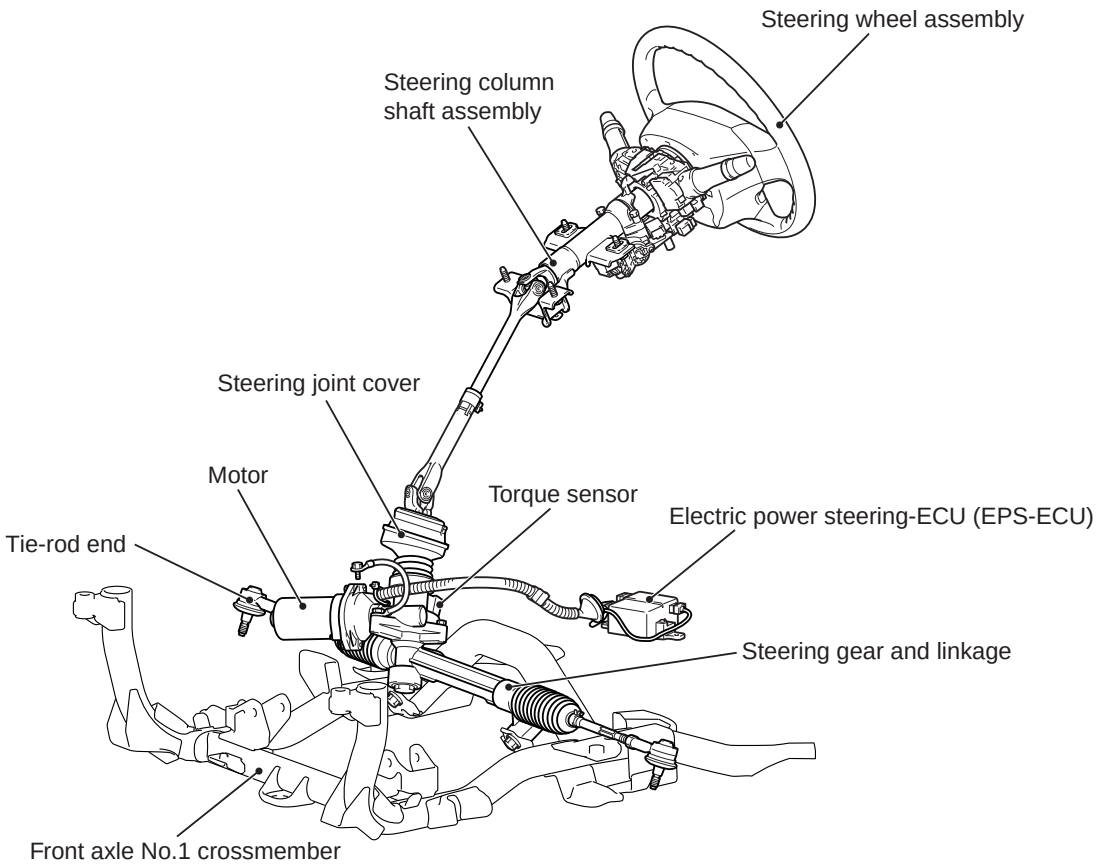

AC708155AB

ELECTRIC POWER STEERING WARNING LAMP CHECK

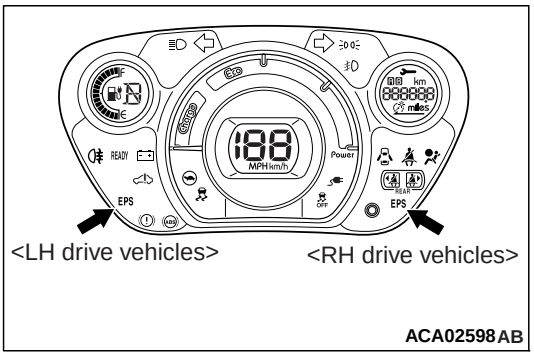

ACA02598AB

1. Check that the electric power steering warning lamp illuminates as follows.
   - When the electric motor switch is turned to the "ON" position, the electric power steering warning lamp illuminates, and goes out after a few seconds.
2. If the electric power steering warning lamp does not illuminate in the above state, the EPS system or combination meter may be defective. Check the diagnosis code, and carry out the diagnosis. If the diagnosis code is not set, carry out the diagnosis while referring to the check items relevant to the EPS warning lamp in the Trouble Symptom Chart.

CHECK STEERING LINKAGE FOR DAMAGE AND LOOSE CONNECTIONS (INCLUDING SEALS AND BOOTS)

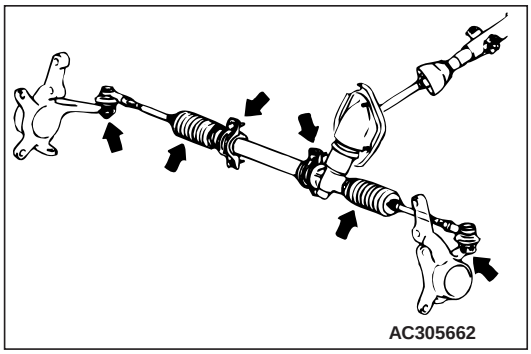

AC305662

1. Move the steering wheel bit by bit to the left or right, and check to be sure that there is no play or looseness in the linkage coupling, that the installation is not loose, and that the rod or arm is not bent or damaged.

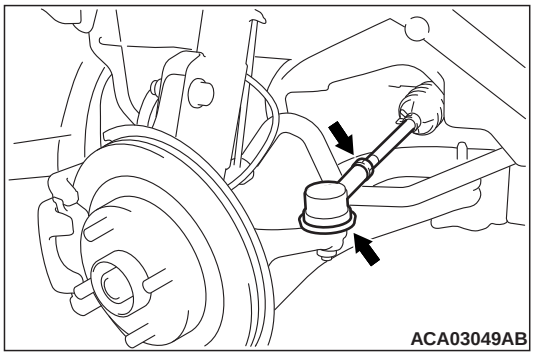

2. Check to be sure that the seal and boot of the ball joint are correctly installed (in the correct position), and that they are not damaged.
3. Check tie-rod end lock nut for looseness. If lock nut is loose, adjust toe-in and then tighten lock nut to the specified torque.

Tightening torque: 34 ± 5 N·m

GROUP 3

VISIBILITY

CONTENTS

3.1. FIELD OF VISION 3-2
3.2. CONDITION OF GLASS 3-2
3.3. REAR-VIEW MIRRORS OR DEVICES 3-2
3.4. WINDSCREEN WIPERS 3-2
3.5. WINDSCREEN WASHERS 3-2
3.6. DEMISTING SYSTEM (X)2 3-2

3.1. Field of vision

M6121100000084

"Not Applicable"

3.2. Condition of glass

M6121200000081

"Not Applicable"

3.3. Rear-view mirrors or devices

M6121300000088

"Not Applicable"

3.4. Windscreen wipers

M6121400000085

"Not Applicable"

3.5. Windscreen washers

M6121500000082

"Not Applicable"

3.6. Demisting system (X)2

M6121600000089

"Not Applicable"

GROUP 4

LAMPS, REFLECTORS AND ELECTRICAL EQUIPMENT

CONTENTS

4.1. HEADLAMPS 4-3
- 4.1.1. Condition and operation 4-3
- 4.1.2. Alignment 4-4
- 4.1.3. Switching 4-6
- 4.1.4. Compliance with requirements1 4-6
- 4.1.5. Levelling devices (where mandatory) 4-7
- 4.1.6. Headlamp cleaning device (where mandatory) 4-8

4.2. FRONT AND REAR POSITION LAMPS, SIDE MARKER LAMPS, END OUTLINE MARKER LAMPS AND DAYTIME RUNNING LAMPS 4-8
- 4.2.1. Condition and operation 4-8
- 4.2.2. Switching 4-9
- 4.2.3. Compliance with requirements1 4-9

4.3. STOP LAMPS 4-10
- 4.3.1. Condition and operation 4-10
- 4.3.2. Switching 4-10
- 4.3.3. Compliance with requirements1 4-10

4.4. DIRECTION INDICATOR AND HAZARD WARNING LAMPS 4-11
- 4.4.1. Condition and operation 4-11
- 4.4.2. Switching 4-11
- 4.4.3. Compliance with requirements1 4-11
- 4.4.4. Flashing frequency 4-11

4.5. FRONT AND REAR FOG LAMPS 4-11
- 4.5.1. Condition and operation 4-11
- 4.5.2. Alignment (X)2 4-11
- 4.5.3. Switching 4-11
- 4.5.4. Compliance with requirements1 4-11

4.6. REVERSING LAMPS 4-11
- 4.6.1. Condition and operation 4-11
- 4.6.2. Compliance with requirements1 4-11
- 4.6.3. Switching 4-11

4.7. REAR REGISTRATION PLATE LAMP 4-12
- 4.7.1. Condition and operation 4-12
- 4.7.2. Compliance with requirements1 4-12

4.8. RETRO-REFLECTORS, CONSPICUITY (RETRO REFLECTING) MARKINGS AND REAR MARKING PLATES 4-12
- 4.8.1. Condition 4-12
- 4.8.2. Compliance with requirements1 4-12

4.9. TELL-TALES MANDATORY FOR LIGHTING EQUIPMENT 4-12
- 4.9.1. Condition and operation 4-12
- 4.9.2. Compliance with requirements1 4-12

4.10. ELECTRICAL CONNECTIONS

BETWEEN TOWING VEHICLE AND TRAILER OR SEMI-TRAILER 4-12

4.11.ELECTRICAL WIRING. 4-12

4.12. NON OBLIGATORY LAMPS AND RETRO-REFLECTORS (X)2. 4-13

4.13. BATTERY(IES) 4-14

4.1. Headlamps

4.1.1. Condition and operation

M6131000100085

CONSTRUCTION DIAGRAM

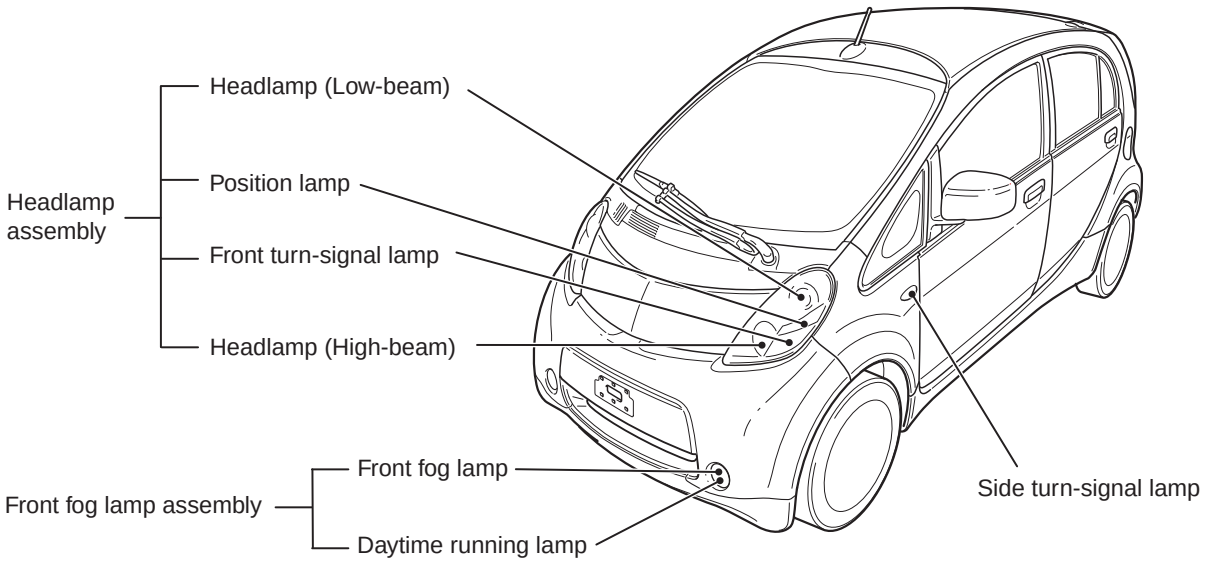

ACA02771 AD

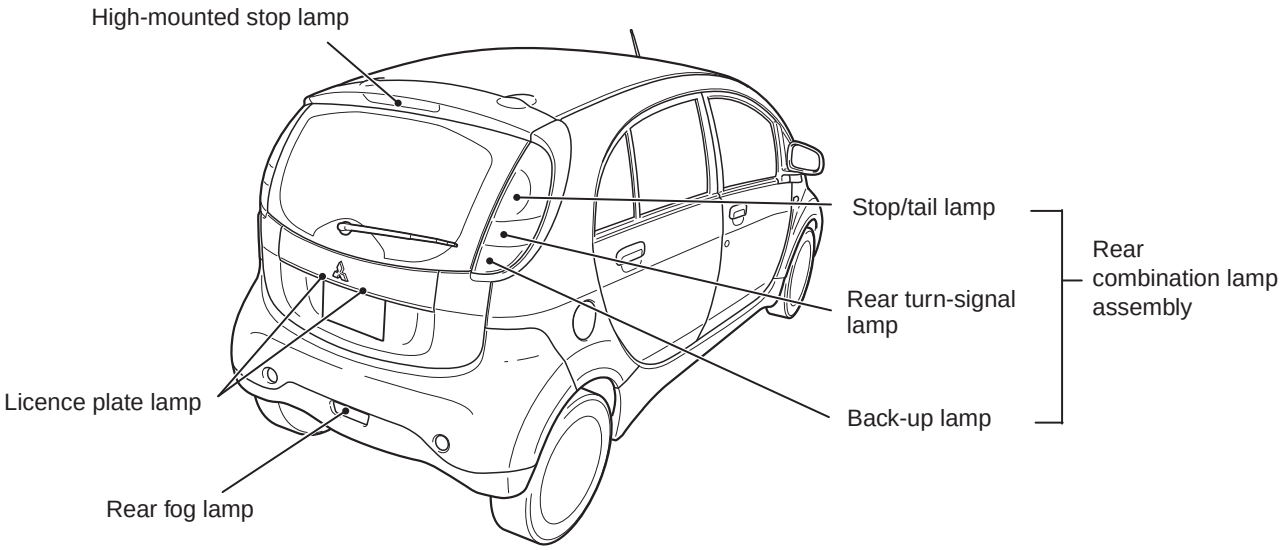

ACA02772AB

- For the low-beam of the headlamp assembly, the projector halogen lamp has been installed. The resin projector lamp has been adopted to reduce weight and to improve design quality.
- The four-lamp system with headlamp (low-beam), headlamp (high-beam), front turn-signal lamp, and position lamp has been adopted for the headlamp assembly.
- For the low-beam of the headlamp, the headlamp manual levelling system has been adopted so that the height adjustment of the optical axis can be performed depending on the vehicle posture.
- The front fog lamp assembly integrated with the daytime running lamp has been installed to the front bumper. <Option>
- The side turn signal lamps have been installed to the fender.
- The rear combination lamp assembly integrates the taillamp/stop lamp, rear turn-signal lamp, and back-up lamp.
- LED has been adopted for the taillamp/stop lamp of rear combination lamp assembly.
- The high-mount stop lamp has been integrated into the tailgate spoiler.

- The licence plate lamp has been installed to above the licence plate.
- The rear fog lamp has been installed to the rear bumper.
- The headlamp automatic-shutdown function and the auto lamp function have been adopted for the lighting system.
- For the flasher timer function of turn-signal lamp, the comfort flasher function has been adopted to improve the operability when changing lanes. When the turn-signal lamp switch (lighting switch) is operated for a short time, this function flashes the turn-signal lamp of the operated direction three times.

SPECIFICATIONS

Items		Specifications
Headlamp assembly	High-beam W	60 (HB3)
	Low-beam W	55 (H11)
	Position lamp W	5 (W5W)
	Front turn-signal lamp W	21 (W21W)
Side turn-signal lamp W		5 (WY5W)
Front fog lamp assembly	Front fog lamp W	35 (H8)
	Daytime running lamp W	13 (P13W)
Rear combination lamp assembly	Taillamp/stop lamp	LED
	Rear turn-signal lamp W	21 (WY21W)
	Back-up lamp W	21 (W21W)
High-mounted stop lamp W x Number of pieces	Integrated into tailgate spoiler	5 (W5W) × 4
Licence plate lamp W		5 (W5W)
Rear fog lamp W		21 (W21W)

NOTE: The brackets ( ) show the bulb type.

4.1.2. Alignment

M6131000200082

PRE-AIMING INSTRUCTION

These conditions must be corrected before a satisfactory adjustment can be made.

- Inspect tyre inflation, and adjust if it is necessary.
- There should be no other load in the vehicle other than driver or substituted weight of approximately 75 kg placed in driver's position.
- Perform the headlamp automatic levelling motor drive test.
- Thoroughly clean the headlamp lenses.

<USING A BEAM SETTING EQUIPMENT>

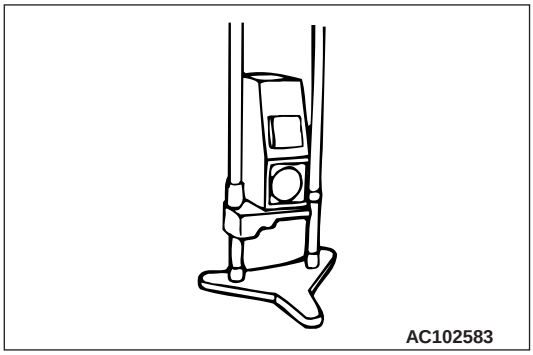

1. The headlamps should be aimed with the proper beam setting equipment, and in accordance with the equipment manufacture’s instructions.
2. Alternately turn the adjusting screw to adjust the headlamp aiming.

<USING A SCREEN> (LOW-BEAM)

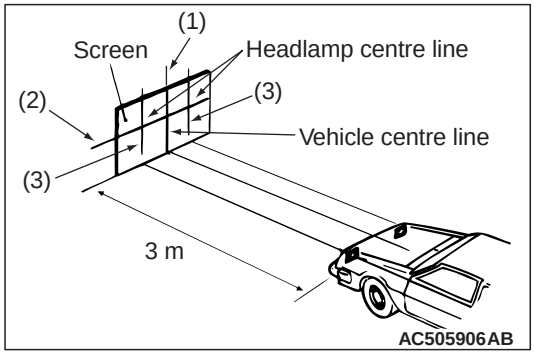

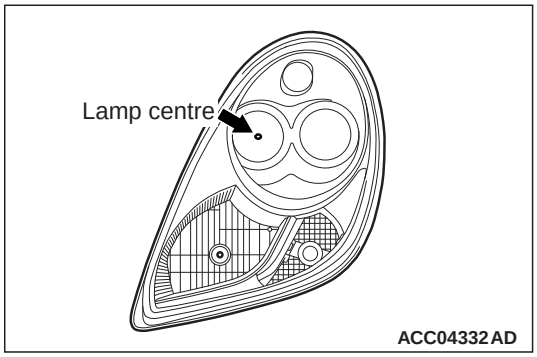

1. Place the vehicle on a level floor, perpendicular to a flat screen 3 m away from the lamp centre position of the low-beam.
2. Rock vehicle sideways to allow vehicle to assume its normal position.
3. To correct for distortion of the suspension, rock the bumpers on the front/rear side of the vehicle up and down three times alternately.
4. Four lines of adhesive tape (or equivalent markings) are required on screen or wall:
   (1) Position a vertical tape or mark so that it is aligned with the vehicle centre line.
   (2) Measure the distance from the lamp centre position to the floor. Transfer the measurement to the screen. Horizontal tape or mark on the screen is for reference of vertical adjustment.
   (3) Measure the distance from the centre line of the vehicle to the centre of each headlamp. Transfer the measurement to the screen. Vertical tape or mark on the screen with reference to the centre line of each headlamp low-beam.

HEADLAMP ADJUSTMENT

⚠ CAUTION

- **Do not cover a headlamp for more than three minutes to prevent the plastic headlamp lens deformation.**
- **Be sure to adjust the aiming adjustment screw in the tightening direction.**

1. The low-beam headlamp should project on the screen upper edge of the beam (cut-off).

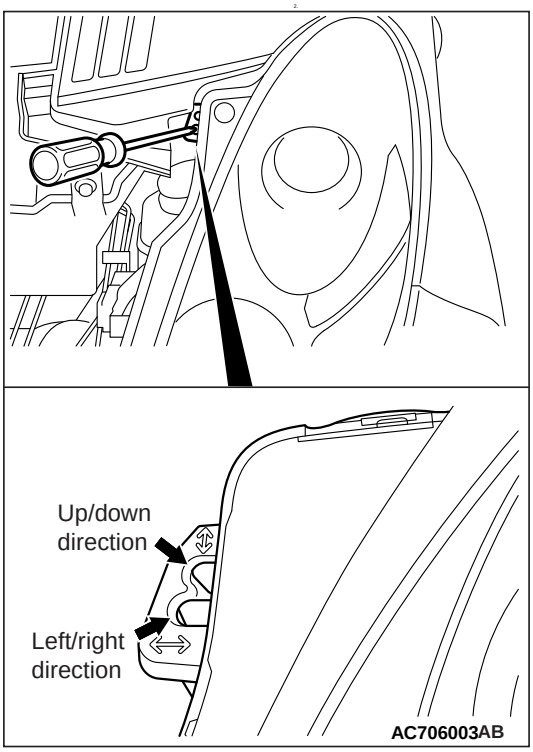

Insert a Philips screwdriver into the horizontal and vertical headlamp adjusting holes. Then adjust the main beam aiming to the standard value by turning the adjusting screws with the screwdriver.

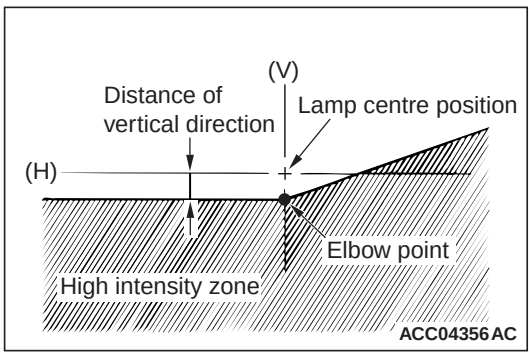

Standard value:
Vertical direction; 36 mm (0.69°) below horizontal (H)
Horizontal direction; Elbow point intersects the vertical line (V)

Limit:
Vertical direction; ±15 mm (±0.29°) from the horizontal cut-off line

Horizontal direction; ± 26 mm (± 0.5°) from the vertical line (V)

4.1.3. Switching

M6131000300089

Headlamps

NOTE:

- *Do not leave the lamps on for a long time while the ready indicator is not illuminated. A run-down auxiliary battery could result.*
- *When it rains, or when the vehicle has been washed, the inside of the lens sometimes becomes foggy, but this does not indicate a functional problem. When the lamp is switched on, the heat will remove the fog. However, if water gathers inside the lamp, we recommend you to have checked.*

Rotate the switch to turn on the lamps.

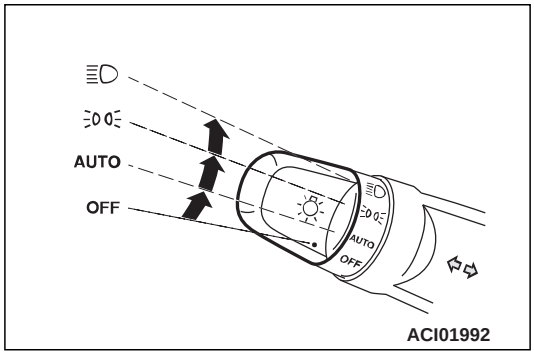

OFF	All lamps off
AUTO	With the electric motor switch in the "ON" position, head-lamps, position, tail, licence plate, and instrument panel lamps turn on and off automatically in accordance with outside light level. All lamps turn off automatically when the electric motor switch is turned to "OFF" position.
	Position, tail, licence plate and instrument panel lamps on
	Headlamps and other lamps go on

NOTE:

- *The sensitivity of the automatic on/off control can be adjusted. For further information, contact a MITSUBISHI MOTORS Authorised Service Point.*
- *When the headlamps are turned off by the automatic on/off control with the electric motor switch in the "ON" position, the front fog lamps (if so equipped) and rear fog lamps also go off. When the headlamps are subsequently turned back on by the automatic on/off control, the front fog lamps also come on but the rear fog lamp stay off. If you wish to turn the rear fog lamp back on, operate the switch again.*

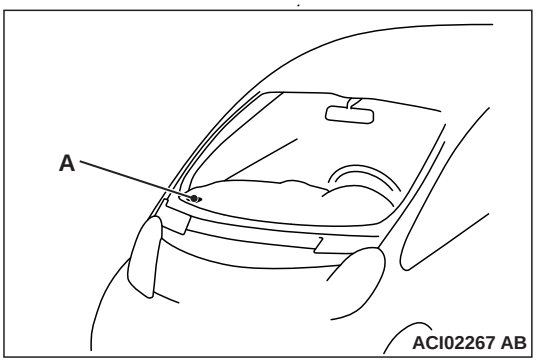

Do not place anything on the automatic light sensor (A), and do not clean with a glass cleaner.

- *If the lamps do not turn on or off with the switch in the "AUTO" position, manually operate the switch and we recommend you to have your vehicle checked.*

4.1.4. Compliance with requirements1.

M6131000400086

"Not Applicable"

4.1.5. Levelling devices (where mandatory)

M6131000500094

Headlamp automatic levelling system

CONSTRUCTION DIAGRAM

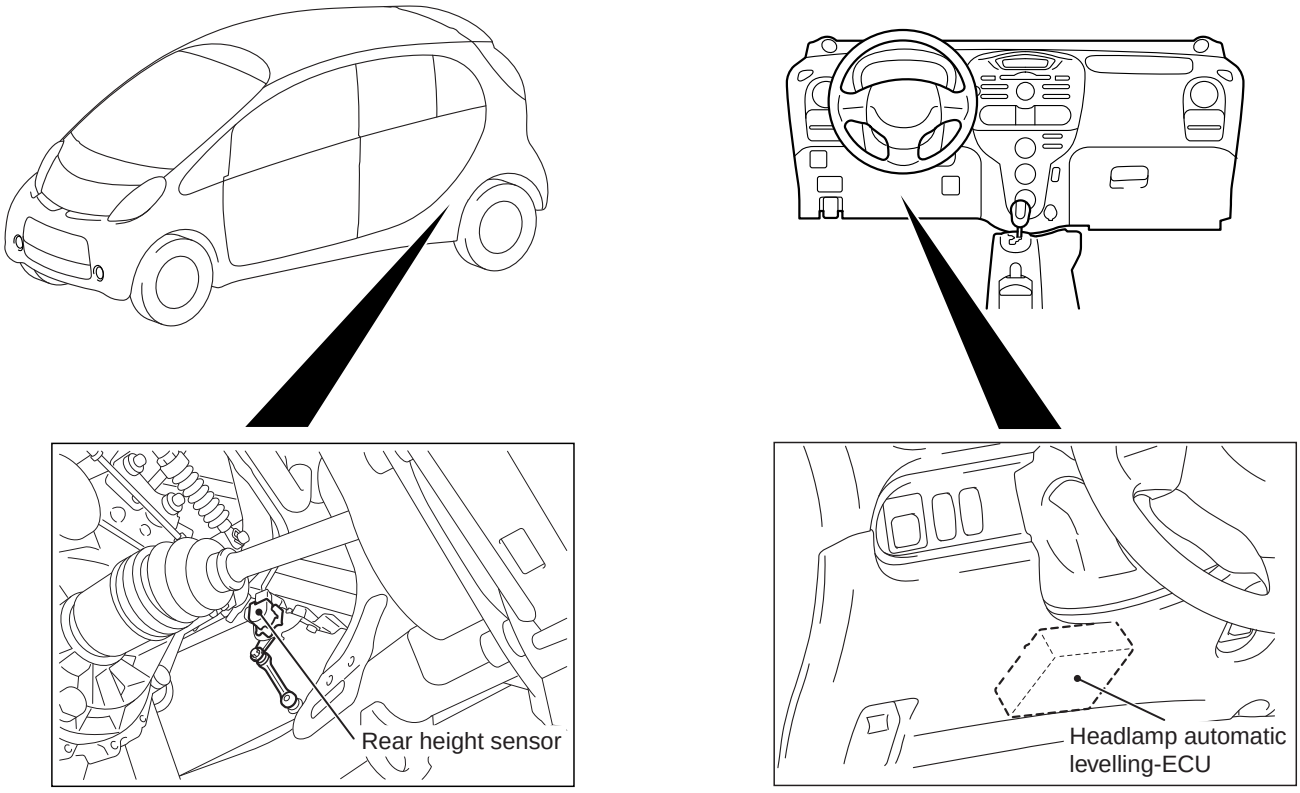

REAR HEIGHT SENSOR CHECK

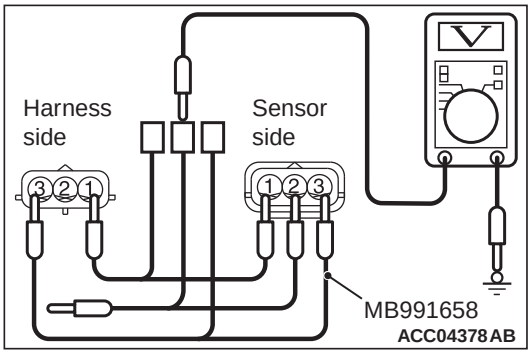

1. Disconnect the sensor connector and connect the special tool test harness (MB991658) as shown.
2. Turn the electric motor switch to the "ON" position.
3. Measure the voltage of sensor connector terminal No. 2.

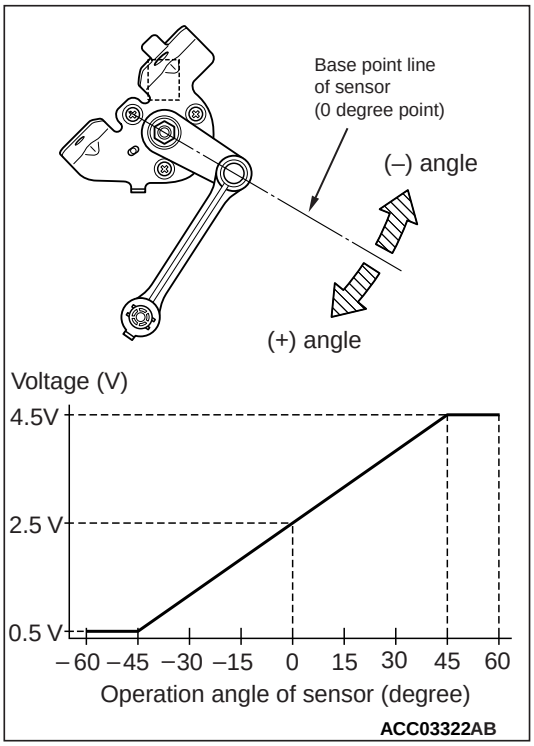

4. Check that voltages show the values described in the graph according to the sensor operation angle.

4.1.6. Headlamp cleaning device (where mandatory)

M6131000600080

"Not Applicable"

4.2. Front and rear position lamps, side marker lamps, end outline marker lamps and daytime running lamps

4.2.1. Condition and operation

M6132000100088

CONSTRUCTION DIAGRAM

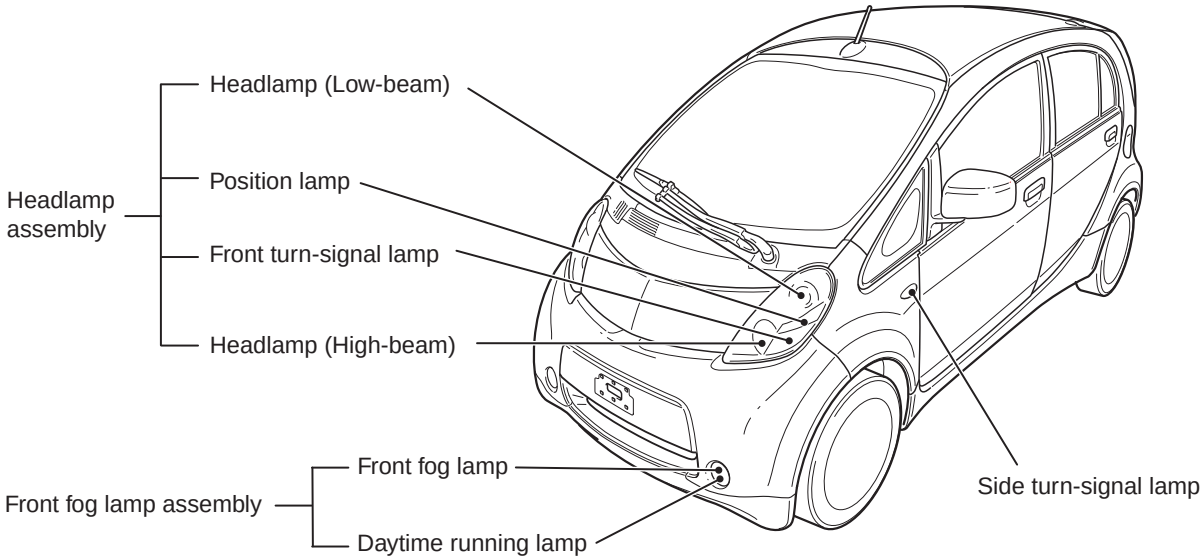

ACA02771 AD

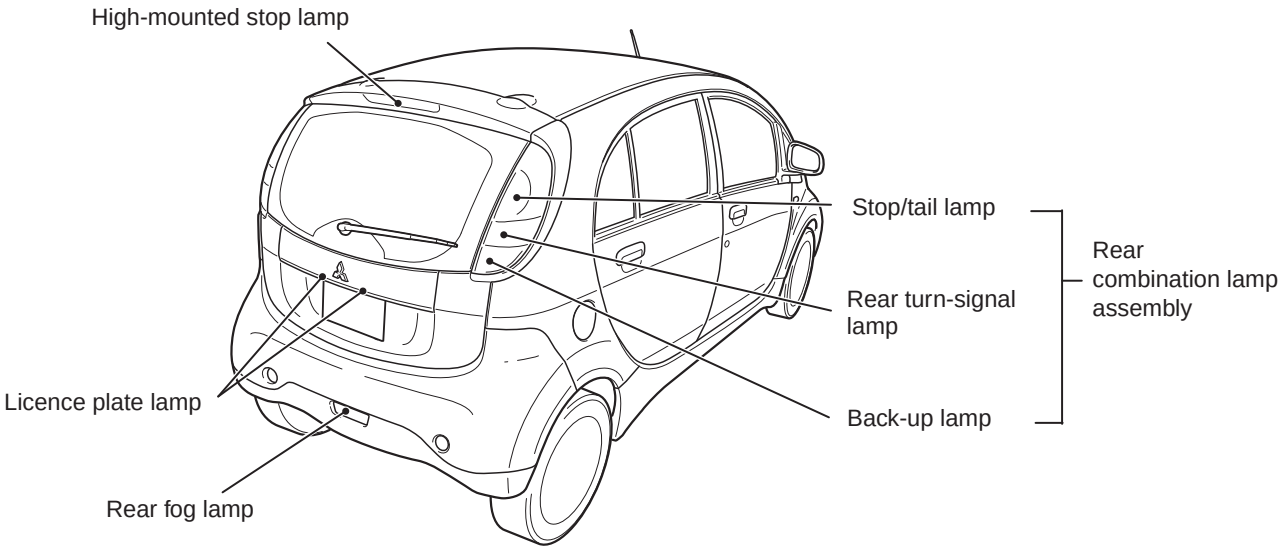

ACA02772AB

- For the low-beam of the headlamp assembly, the projector halogen lamp has been installed. The resin projector lamp has been adopted to reduce weight and to improve design quality.
- The four-lamp system with headlamp (low-beam), headlamp (high-beam), front turn-signal lamp, and position lamp has been adopted for the headlamp assembly.
- For the low-beam of the headlamp, the headlamp manual levelling system has been adopted so that the height adjustment of the optical axis can be performed depending on the vehicle posture.
- The front fog lamp assembly integrated with the daytime running lamp has been installed to the front bumper. <Option>
- The side turn signal lamps have been installed to the fender.
- The rear combination lamp assembly integrates the taillamp/stop lamp, rear turn-signal lamp, and back-up lamp.
- LED has been adopted for the taillamp/stop lamp of rear combination lamp assembly.
- The high-mount stop lamp has been integrated into the tailgate spoiler.
- The licence plate lamp has been installed to above the licence plate.
- The rear fog lamp has been installed to the rear bumper.
- The headlamp automatic-shutdown function and the auto lamp function have been adopted for the lighting system.
- For the flasher timer function of turn-signal lamp, the comfort flasher function has been adopted to improve the operability when changing lanes. When the turn-signal lamp switch (lighting switch) is operated for a short time, this function flashes the turn-signal lamp of the operated direction three times.

SPECIFICATIONS

Items		**Specifications**
Headlamp assembly	High-beam W	60 (HB3)
	Low-beam W	55 (H11)
	Position lamp W	5 (W5W)
	Front turn-signal lamp W	21 (W21W)
Side turn-signal lamp W		5 (WY5W)
Front fog lamp assembly	Front fog lamp W	35 (H8)
	Daytime running lamp W	13 (P13W)
Rear combination lamp assembly	Taillamp/stop lamp	LED
	Rear turn-signal lamp W	21 (WY21W)
	Back-up lamp W	21 (W21W)
High-mounted stop lamp W x Number of pieces	Integrated into tailgate spoiler	5 (W5W) × 4
Licence plate lamp W		5 (W5W)
Rear fog lamp W		21 (W21W)

NOTE: The brackets ( ) show the bulb type.

4.2.2. Switching

M6132000200085

"Not Applicable"

4.2.3. Compliance with requirements1

M6132000300082

"Not Applicable"

4.3. Stop Lamps

4.3.1. Condition and operation

M6133000100081

"Not Applicable"

4.3.2. Switching

M6133000200088

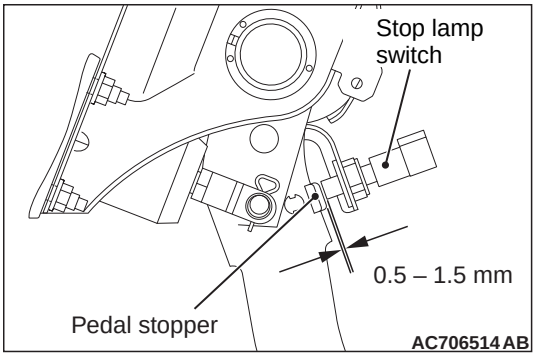

1. Check that the clearance between the stop lamp switch and the pedal stopper is as shown in the figure.

⚠ CAUTION
Make sure that the stop lamp is not illuminated when the brake pedal is not depressed.

STOP LAMP SWITCH CHECK

⚠ CAUTION
Do not apply grease or lubricant to the switch and the switch installation section to avoid malfunction of the switch. In addition, do not use gloves which have grease on them.

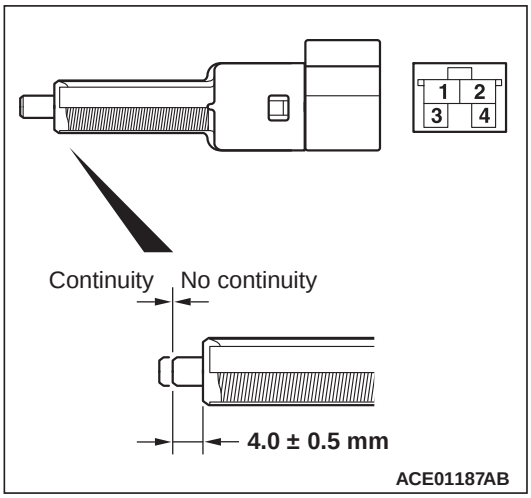

Check for continuity between the terminals of the switch.

Check condition	Terminal connector of tester	Normal condition
At free position	1 – 2	Continuity exists (2 Ω or less)
Press the plunger from the edge of the outer case by the dimension shown in the figure.	1 – 2	No continuity

4.3.3. Compliance with requirements1.

M6133000300085

"Not Applicable"

4.4. Direction indicator and hazard warning lamps

4.4.1. Condition and operation

M6134000100084

"Not Applicable"

4.4.2. Switching

M6134000200081

"Not Applicable"

4.4.3. Compliance with requirements1.

M6134000300088

"Not Applicable"

4.4.4. Flashing frequency

M6134000400085

"Not Applicable"

4.5. Front and rear fog lamps

4.5.1. Condition and operation

M6135000100087

"Not Applicable"

4.5.2. Alignment (X)2

M6135000200084

"Not Applicable"

4.5.3. Switching

M6135000300081

"Not Applicable"

4.5.4. Compliance with requirements1.

M6135000400088

"Not Applicable"

4.6. Reversing lamps

4.6.1. Condition and operation

M6136000100080

"Not Applicable"

4.6.2. Compliance with requirements1

M6136000200087

"Not Applicable"

4.6.3. Switching

M6136000300084

"Not Applicable"

4.7. Rear registration plate lamp

4.7.1. Condition and operation

M6137000100083

"Not Applicable"

4.7.2. Compliance with requirements1

M6137000200080

"Not Applicable"

4.8. Retro-reflectors, conspicuity (retro reflecting) markings and rear marking plates

4.8.1. Condition

M6138000100086

"Not Applicable"

4.8.2. Compliance with requirements1

M6138000200083

"Not Applicable"

4.9. Tell-tales mandatory for lighting equipment

4.9.1. Condition and operation

M6139000100089

"Not Applicable"

4.9.2. Compliance with requirements1

M6139000200086

"Not Applicable"

4.10. Electrical connections between towing vehicle and trailer or semi-trailer

M6130100000082

"Not Applicable"

4.11. Electrical wiring

M6131100000085

"Query raised for this content"

4.12. Non obligatory lamps and retro-reflectors (X)2

M6131200000082

CONSTRUCTION DIAGRAM

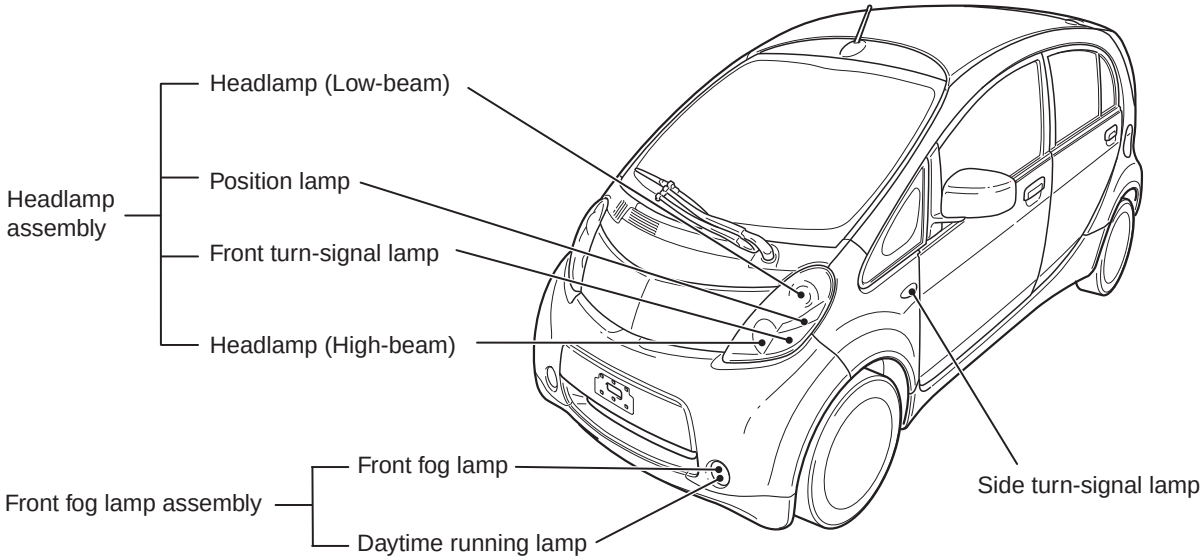

ACA02771 AD

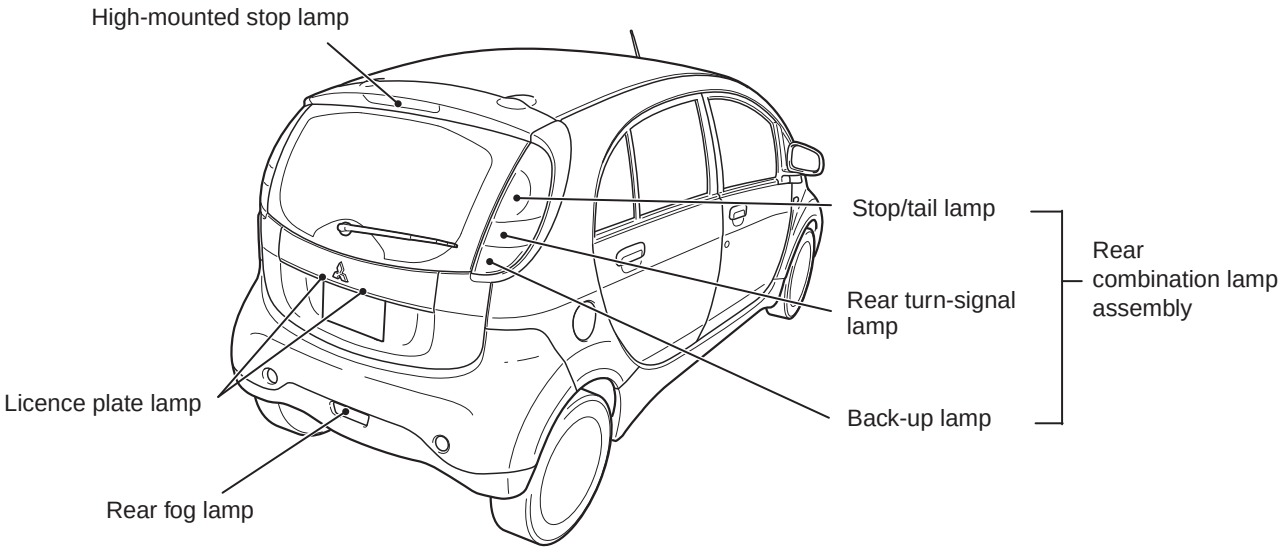

ACA02772AB

- For the low-beam of the headlamp assembly, the projector halogen lamp has been installed. The resin projector lamp has been adopted to reduce weight and to improve design quality.
- The four-lamp system with headlamp (low-beam), headlamp (high-beam), front turn-signal lamp, and position lamp has been adopted for the headlamp assembly.
- For the low-beam of the headlamp, the headlamp manual levelling system has been adopted so that the height adjustment of the optical axis can be performed depending on the vehicle posture.
- The front fog lamp assembly integrated with the daytime running lamp has been installed to the front bumper. <Option>
- The side turn signal lamps have been installed to the fender.
- The rear combination lamp assembly integrates the taillamp/stop lamp, rear turn-signal lamp, and back-up lamp.
- LED has been adopted for the taillamp/stop lamp of rear combination lamp assembly.
- The high-mount stop lamp has been integrated into the tailgate spoiler.

- The licence plate lamp has been installed to above the licence plate.
- The rear fog lamp has been installed to the rear bumper.
- The headlamp automatic-shutdown function and the auto lamp function have been adopted for the lighting system.
- For the flasher timer function of turn-signal lamp, the comfort flasher function has been adopted to improve the operability when changing lanes. When the turn-signal lamp switch (lighting switch) is operated for a short time, this function flashes the turn-signal lamp of the operated direction three times.

SPECIFICATIONS

Items		Specifications
Headlamp assembly	High-beam W	60 (HB3)
	Low-beam W	55 (H11)
	Position lamp W	5 (W5W)
	Front turn-signal lamp W	21 (W21W)
Side turn-signal lamp W		5 (WY5W)
Front fog lamp assembly	Front fog lamp W	35 (H8)
	Daytime running lamp W	13 (P13W)
Rear combination lamp assembly	Taillamp/stop lamp	LED
	Rear turn-signal lamp W	21 (WY21W)
	Back-up lamp W	21 (W21W)
High-mounted stop lamp W x Number of pieces	Integrated into tailgate spoiler	5 (W5W) × 4
Licence plate lamp W		5 (W5W)
Rear fog lamp W		21 (W21W)

NOTE: The brackets ( ) show the bulb type.

4.13. Battery(ies)

M6131300000090

TRACTION BATTERY

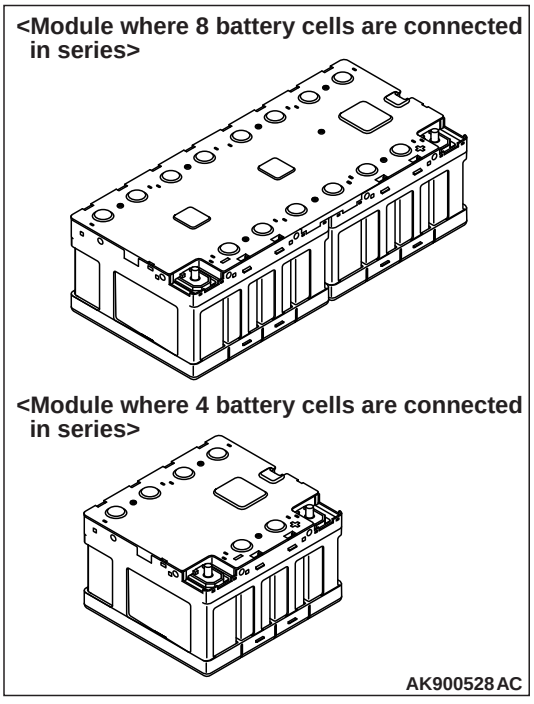

The traction battery consists of lithium ion battery that is small and lightweight and also has a high energy density. The motor (electric motor unit) and the air conditioning system are powered by the traction battery. The traction battery is in the glass-reinforced plastic case that has high water-resistant properties, vibration-resistant properties, dust-resistant properties and high heat-resistant properties. The case is placed under the floor. The battery consists of two kind of modules, 8-cell modules in which 8 battery cells are in series, and 4-cell modules in which 4 battery cells are in series. 10 of 8-cell modules and 2 of 4-cell modules are used. In total, the 88 battery cells are connected in series, which produces the total voltage as 330 V.

CHARACTERISTICS OF TRACTION BATTERY AND PRECAUTIONS IN USE

<Characteristics>

- The traction battery, which is based on lithium ion battery, can be charged before the stored energy is used up.
- The traction battery capacity gradually decreases with the lapse of time, depending on the operating/stored conditions.
- The traction battery performance can be varied with ambient temperature. Especially in the lower temperature, the cruising range may become shorter and the required time for charging may also become longer.
- If the vehicle is stored in extremely high or low temperature, the battery capacity may decrease rapidly.
- Even if the vehicle is not in use, the traction battery may be gradually discharged and the energy stored in the traction battery will be reduced.

<Precautions in use>

- Storage of the vehicle for a long time with zero state on the energy level gauge would make it infeasible to charge the traction battery due to the over-discharge and in some cases the traction battery needs to be replaced.
- When the vehicle is parked for a long time without use, charge the traction battery fully every 3 months to avoid the over-discharge.

PRECAUTIONS ON HOW TO USE THE HIGH-VOLTAGE VEHICLE

This vehicle has a high-voltage (330 V) circuit. If the vehicle is handled incorrectly, electric leakage or shock may result. Also, the service technicians/engineers who perform inspection and service related to the high-voltage circuit of the electric vehicles are obligated to observe national legal requirements.

INSPECTION/TEST OF PROTECTIVE EQUIPMENT, BLOTTER STORAGE

Check and store the protective equipment in accordance with national legal requirements.

PROTECTIVE EQUIPMENT (REFERENCE ONLY)

⚠ CAUTION

Use protective equipment which complies with national legal requirements.

Protective equipment	Number	Name	Use
 B992640 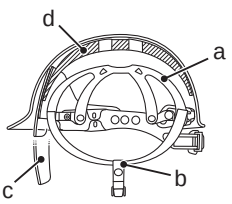 AC903299AB	MB992640 a. MB992641 b. MB992642 c. MB992643 d. MB992644	Electric insulation helmet (with shield) a. Helmet suspension b. Chin strap c. Visor d. Liner	• When you may contact with the exposed live wirings while handling the damaged vehicle • Alternatively, when you prevent the electric shock according to need
 B992645	MB992645	Electric insulation jacket	• When you may contact with the exposed live wirings while handling the damaged vehicle • Alternatively, when you prevent the electric shock according to need

Protective equipment	Number	Name	Use
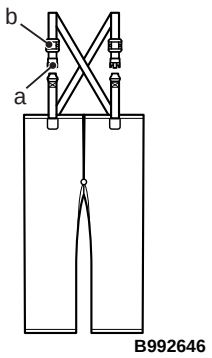 B992646	MB992646 a. MB992669 b. MB992670	Electric insulation trousers a. Electric insulation trousers buckle b. Electric insulation trousers adjuster	• When you may contact with the exposed live wirings while handling the damaged vehicle • Alternatively, when you prevent the electric shock according to need
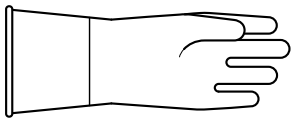 B992647	a. MB992647 b. MB992648 c. MB992649 d. MB992650	a. Electric insulation glove (LL) b. Electric insulation glove (L) c. Electric insulation glove (M) d. Electric insulation glove (S)	• Service plug removal and installation • Work on live wirings when there is a problem • When you may contact with the exposed live wirings while handling the damaged vehicle • Alternatively, when you prevent the electric shock according to need
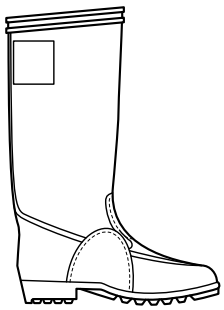 B992651	a. MB992651 b. MB992652 c. MB992653 d. MB992654 e. MB992655 f. MB992656 g. MB992657 h. MB992658	a. Electric insulation boots (24.0) b. Electric insulation boots (24.5) c. Electric insulation boots (25.0) d. Electric insulation boots (25.5) e. Electric insulation boots (26.0) f. Electric insulation boots (26.5) g. Electric insulation boots (27.0) h. Electric insulation boots (28.0)	• When you may contact with the exposed live wirings while handling the damaged vehicle • Alternatively, when you prevent the electric shock according to need

TESTER AND SPECIAL TOOL

Be sure to use the tester and special tools specified in this manual.

HIGH-VOLTAGE COMPONENTS

The high-voltage components are described below. Also, wiring harness and connectors of high-voltage circuit are unified with a colour of orange.

- Traction battery
- Inverter [Electric motor control unit (EMCU)]
- On board charger (OBC) /DC-DC converter
- Motor (electric motor unit)
- Heater
- A/C compressor
- Traction battery cable
- EV charger cable (regular charging)
- EV charger cable (quick charging)
- Service plug
- Wiring harness and connector

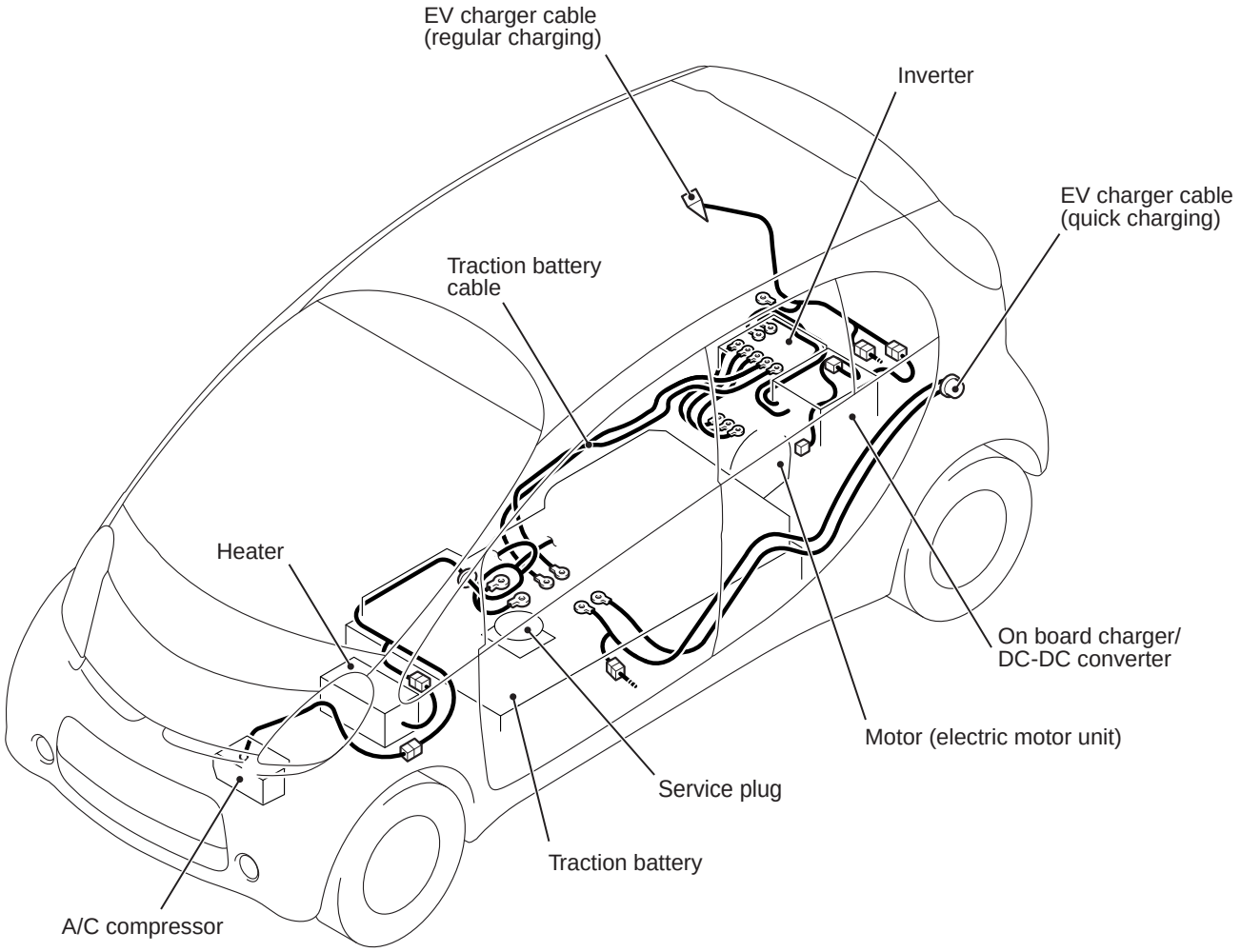

ACC01807AB

SERVICE PRECAUTIONS

⚠ DANGER

When adjusting the high-voltage components, be sure to disconnect the service plug in order to shut off the high voltage. If the high voltage cannot be shut off after the following work, or if the high-voltage shut-off work is difficult because of the accidental damages.

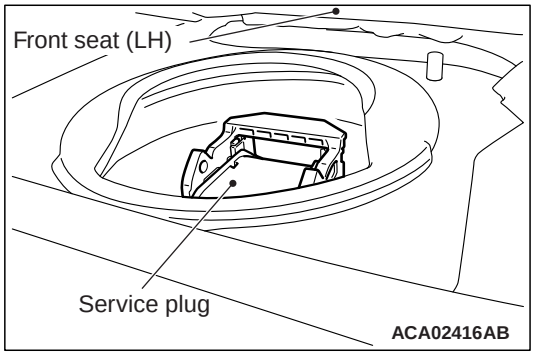

Remove the service plug under the front seat (LH) according to the following procedure, which shuts off the high voltage to the high-voltage system. Also, when installing the service plug and the service lid, follow the service plug and service lid installation steps.

FOUR&EIGHT-CELL MODULE REMOVAL AND INSTALLATION SERVICE PRECAUTIONS

⚠ CAUTION

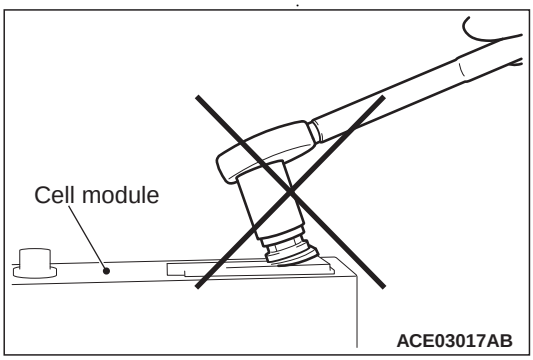

When removing or installing the nut which tightens the cell module and the bus bar, do not apply force in the improper direction, otherwise the terminal of the cell module may be deformed.

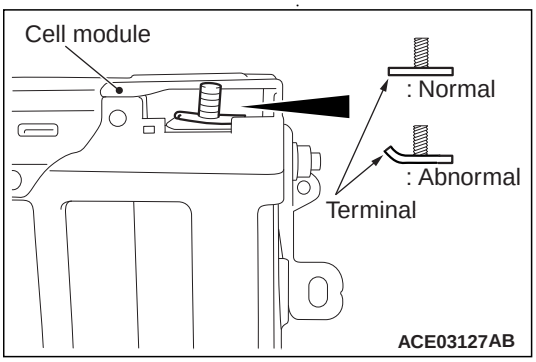

If the terminal is deformed, do not reuse the cell module. Always replace the cell module with a new one.

SERVICE PLUG AND SERVICE LID REMOVAL STEPS

Prepare the service plug removal steps check sheet.

NOTE: After each service step, fill in the check column of the service plug removal steps check sheet.

1. Turn the electric motor switch to "LOCK" (OFF).

⚠ WARNING

- ***To avoid causing any trouble to the electric motor unit components, do not disconnect the auxiliary battery negative terminal for 1 minute after turning the electric motor switch to "LOCK" (OFF).***
- ***The voltage of the smooth condenser in the inverter must be decreased thoroughly. Therefore, do not remove the service plug for 5 minutes after the negative terminal of the auxiliary battery is disconnected.***

2. Disconnect the negative terminal of the auxiliary battery.

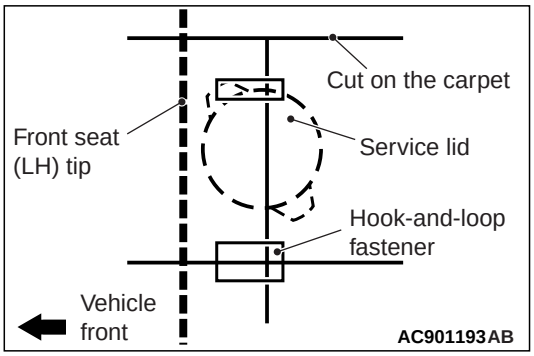

3. Slide the front seat (LH) to the end, and turn up the carpet under the front seat (LH).

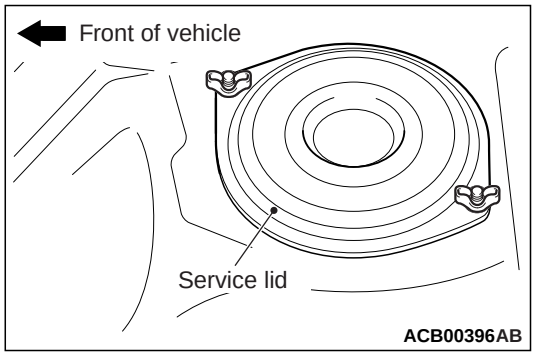

4. Remove the service lid mounting nut, and then remove the service lid.

⚠ DANGER

- ***Wear the electric insulation gloves when removing out the service plug.***
- ***Do not lift the lever of service plug by halve. It is dangerous because the current is supplied during the lifting operation. Be sure to remove the service plug all at once.***

⚠ WARNING

The voltage of the smooth condenser in the inverter must be decreased thoroughly. Therefore, do not remove the service plug for 5 minutes after the negative terminal of the auxiliary battery is disconnected.

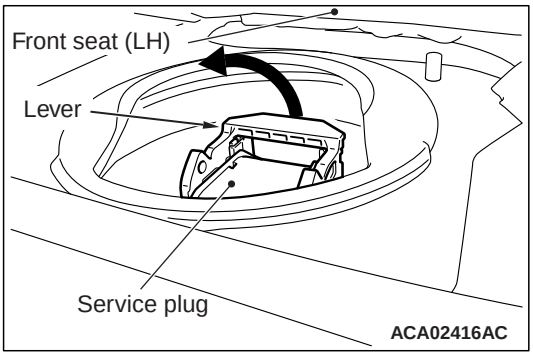

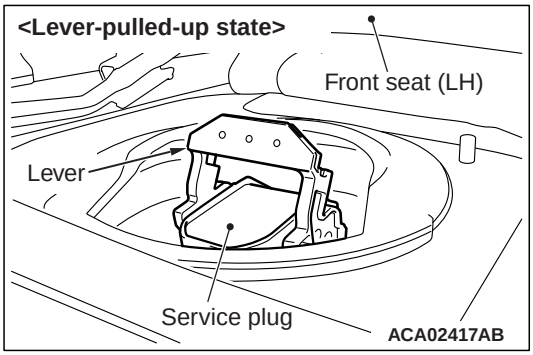

5. Lift the service plug lever.

⚠ DANGER

After removing the service plug, insulate the plug installed part of the traction battery securely.

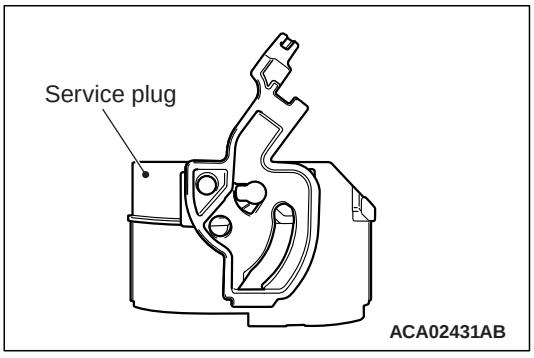

6. Remove the service plug.

⚠ DANGER

During inspection, wear the electric insulation gloves. If the high voltage cannot be shut off after the inspection.

7. When removing and installing each high-voltage part, be sure to perform the following inspection beforehand.

When the traction battery is removed and installed

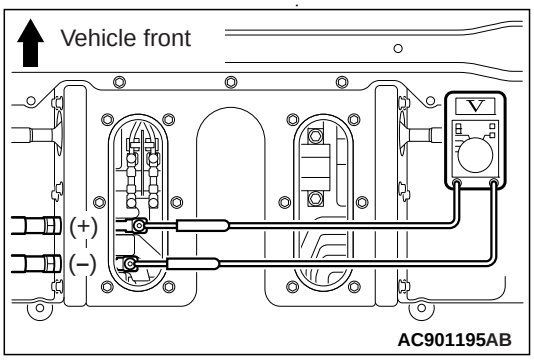

Remove the work hole lid at the bottom of the traction battery, and carry out the voltage inspection as shown in the figure, using a high-voltage multimeter.

Normal voltage: Approx. 0 V

When the other high-voltage parts are removed and installed

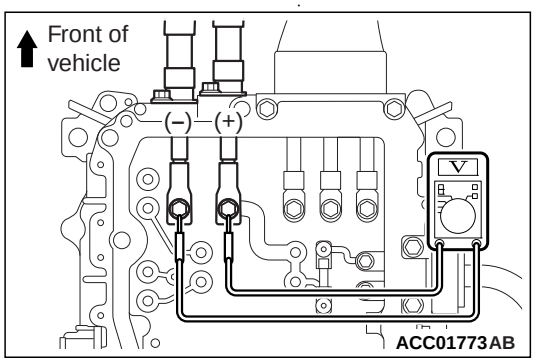

Remove the service lid at the top of the inverter in the electric motor unit room, and carry out the voltage inspection as shown in the figure using a high-voltage multimeter.

Normal voltage: Approx. 0 V

SERVICE PLUG AND SERVICE LID INSTALLATION STEPS

⚠ *DANGER*

Wear the electric insulation gloves when installing the service plug.

⚠ CAUTION

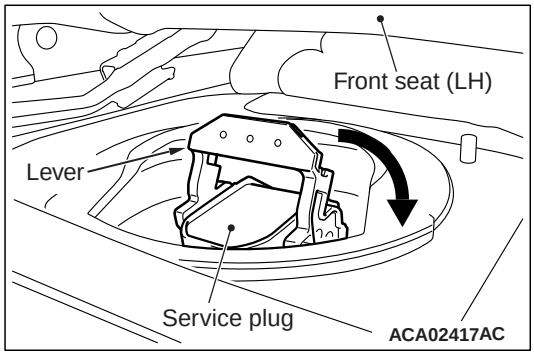

Remove the service plug lever down until it clicks, because the interlock switch does not operate unless the service plug lever is pulled down properly.

1. Install the service plug.

⚠ CAUTION

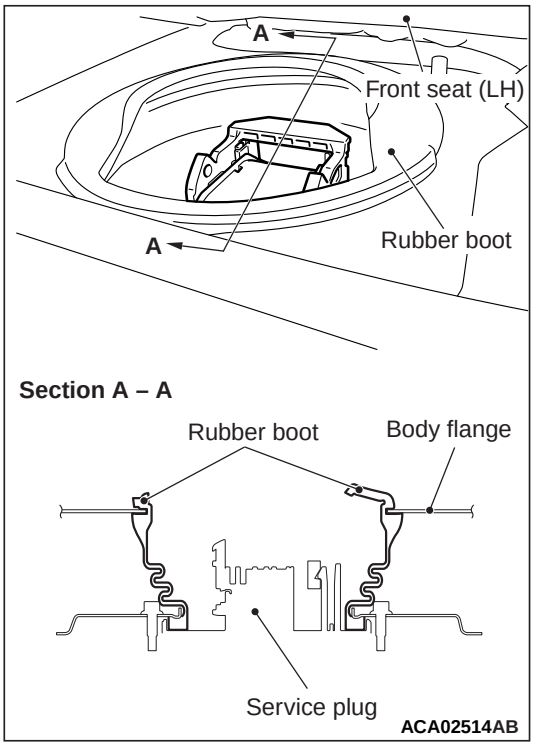

If the rubber boot around the service plug is released, water may enter the inside of the traction battery, resulting in short-circuit. Therefore, check that the rubber boot is engaged with the body flange before installing the service lid.

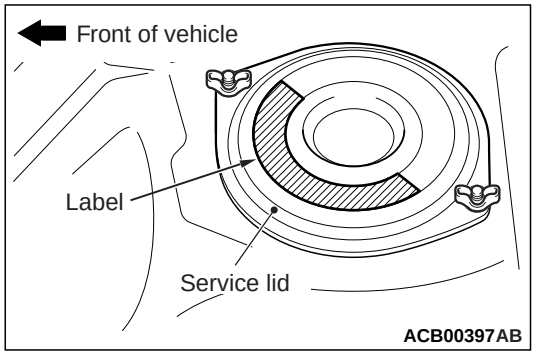

2. Install the service lid with the label on it facing the front of the vehicle, and then tighten the mounting nut.

ACTION WHEN HIGH VOLTAGE CANNOT BE SHUT OFF

SPECIAL TOOL (REFERENCE ONLY)

Tool	Number	Name	Use
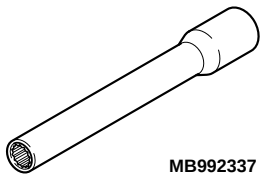 MB992337	MB992337	Electric insulation socket	**⚠ CAUTION** **This tool is the insulation tool which prevents the circuit of the equipment from shorting caused by tool dropping, etc. It does not isolate the operator from the equipment. When using this tool, be sure to wear the electric insulation gloves.** • When shutoff of the high voltage is difficult, and the traction battery cable and the EV charger cable (quick charging) connected to the traction battery are removed • When shutoff of the high voltage is difficult, and the traction battery cable and the motor (electric motor unit) cable connected to inverter are removed • Alternatively, when a short circuit of the equipment may be present with the damaged vehicle, etc.

⚠ DANGER

Be sure to wear the electric insulation gloves (special tool) during this work.

⚠ DANGER

Use protective equipment which complies with national legal requirements.

⚠ DANGER

Be sure to wear the electric insulation socket (MB992337) during this work.

When the high voltage remains even after the shut-off of the high voltage is performed, or when the high voltage shut-off work itself is difficult because of the accidental damages, perform the security according to the following procedure.

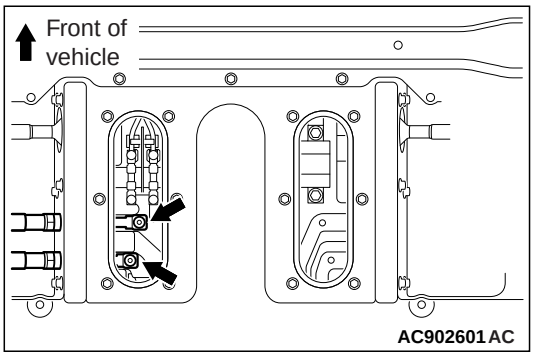

1. Remove the work hole lid at the bottom of the traction battery, and then remove the traction battery cable.

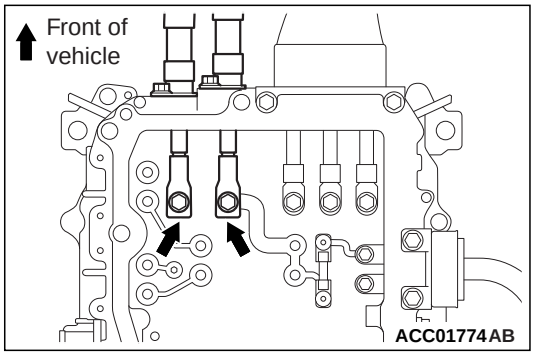

2. When the work No. 1 is difficult or when the maintenance work of the electric motor unit room must be necessarily performed, remove the traction battery cable of the inverter.

ACTION WHEN HIGH-VOLTAGE SHUT-OFF SYSTEM IS OPERATED

To prevent an electric shock during a collision, the system which shuts off the high voltage is adopted. When this system operates, diagnose the post-collision vehicles. After the diagnosis, erase the diagnosis code of EV-ECU.

HIGH-VOLTAGE CONNECTOR REMOVAL STEPS

⚠ DANGER

When adjusting the high-voltage parts, remove the service plug.

⚠ DANGER

When the lock of the connector is damaged, be sure to replace the wiring harness assembly.

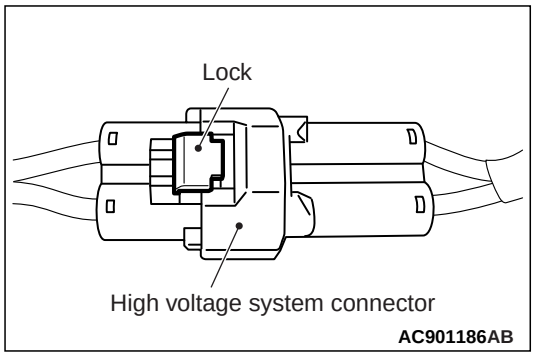

The connector with lock mechanism is adopted.

⚠ CAUTION

Be sure to release the lock of the connector with your hands, because use of a tool or others may damage the connector.

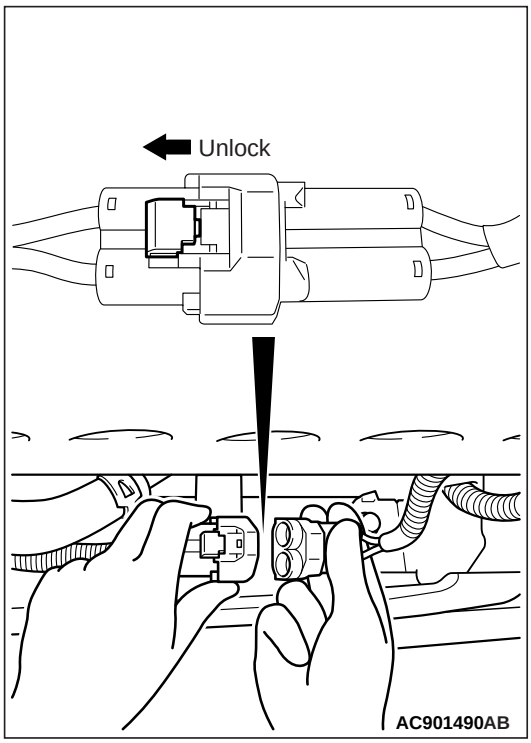

Unlock the connector by sliding the lock, and then remove it.

AUXILIARY BATTERY

The light weight and compact auxiliary battery has been adopted.

<LHD>

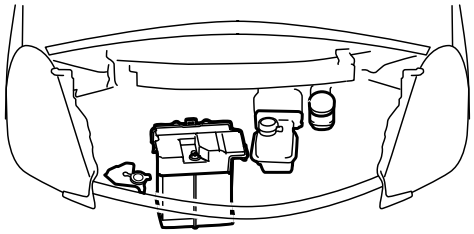

<RHD>

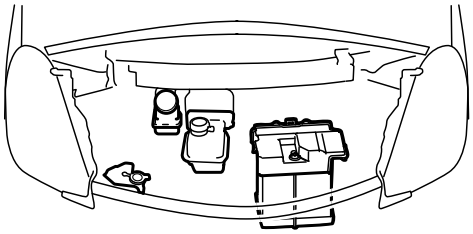

ACI02266AB

Item	Specifications
Type	34B19L (S)
Voltage V	12
Capacity (5 hours average Ah)	27
Specific gravity of battery electrolyte (fully charged at 20°C)	1.290

GROUP 5

AXLES, WHEELS, TYRES AND SUSPENSION

CONTENTS

5.1. AXLES 5-2
5.1.1. Axles 5-2
5.1.2. Stub axles 5-6
5.1.3. Wheel bearings 5-7

5.2. WHEELS AND TYRES 5-7
5.2.1. Road wheel hub 5-7
5.2.2. Wheels 5-7
5.2.3. Tyres 5-7

5.3. SUSPENSION SYSTEM 5-9
5.3.1. Springs and stabiliser 5-9
5.3.2. Shock absorbers 5-9
5.3.2.1. efficiency testing of damping (X)2 . 5-9
5.3.3. Torque tubes, radius arms, wishbones and suspension arms 5-9
5.3.4. Suspension joints 5-9
5.3.5. Air suspension 5-9

5.1. Axles

5.1.1. Axles

M6140100100080

FRONT AXLE

The front axle is composed of the front hub, knuckle, and wheel bearing, and it offers the following characteristics.

- New wheel bearing has been equipped with which the rotating resistance is reduced.
- Split pin has been used in the hub joint.

SPECIFICATIONS

Items		Specifications
Wheel bearing	Bearing type	Double row angular contact ball bearing
	Bearing (O/D × I/D) mm	64 × 35

CONSTRUCTION DIAGRAM

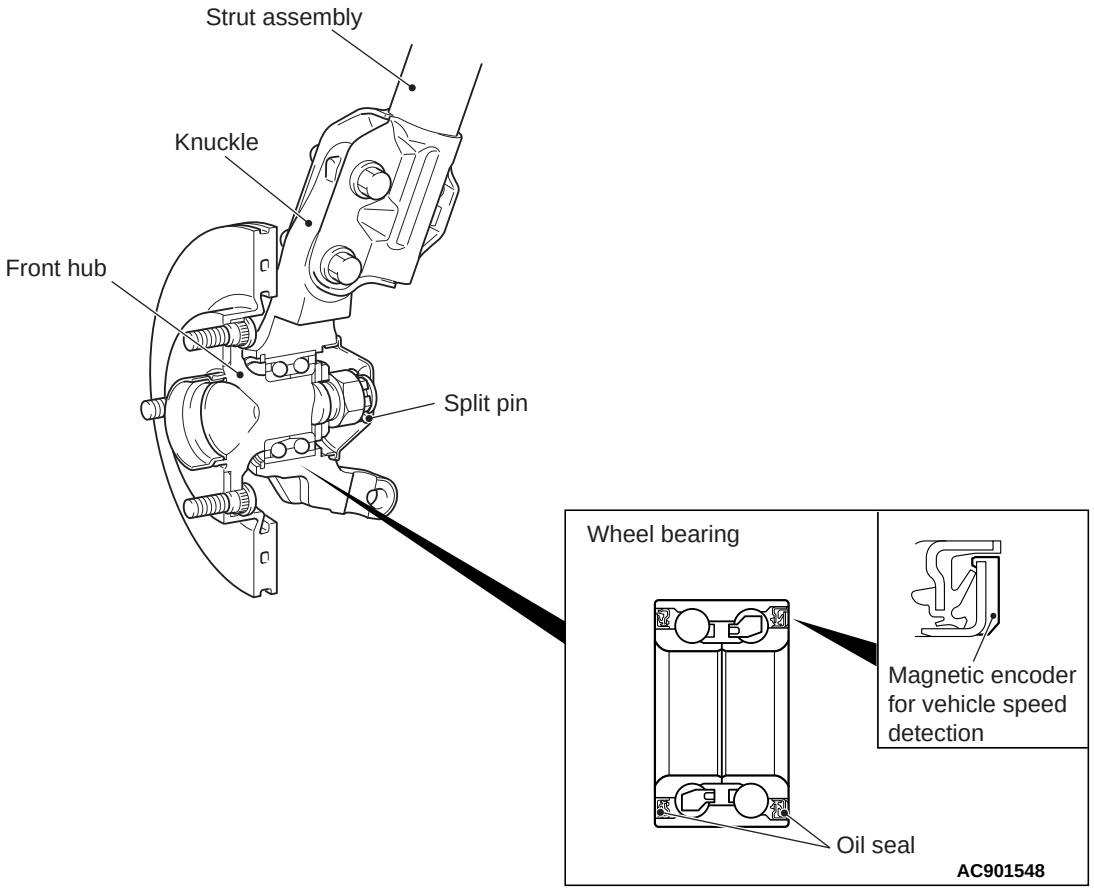

AC901183AB

REAR AXLE

The rear axle is composed of the rear hub, wheel bearing, unit bearing (double row angular contact ball bearing), and drive shaft, and it offers the following characteristics.

- The ETJ type with small sliding resistance has been adopted in the left hand side of the drive shaft transmission-side constant velocity joint, and the EDJ type is adopted in the right hand side which has a small torque variation even when the crossing angle is large. As a result, the idle vibration and driving vibration have been reduced.

- To the wheel side constant velocity joint of drive shaft, a light-weight and compact the EUJ type has been adopted.
- The lead-free grease for the constant velocity joint has been adopted.
- The hexavalent chromium has been eliminated from the dust cover material.
- The vehicle speed detection magnetic encoder for ABS has been integrated into the drive shaft, reducing the number of parts.
- The split pin has been employed in the joint between the drive shaft and hub.

NOTE:

- *EUJ (High Efficiency Compact Undercut Joint): Joint which is lighter and more compact than BJ (Birfield Joint) by increasing the number of balls from six to eight*
- *ETJ (High Efficiency Compact Tripod Joint): Joint which is lighter and more compact than TJ (Tripod Joint)*
- *EDJ (High Efficiency Compact Double Offset Joint): Joint which is lighter and more compact than DOJ(Double Offset Joint) by increasing the number of balls from six to eight*

SPECIFICATIONS

Items			**Specifications**
Wheel bearing	Bearing type		Unit bearing (Double row angular contact ball bearing)
	Bearing (Inner diameter) *1 mm		35
Drive shaft	Joint type	Wheel side	EUJ
		Transmission side – LH	ETJ
		Transmission side – RH	EDJ
	Shaft length *2× Shaft diameter mm	LH	360 × 20.1
		RH	492 × 20.1

NOTE:

- **1: The wheel bearing is of a unit type, and only the inner diameter is indicated with the dimensions.*
- **2: Indicates the length between centre points of joints.*

CONSTRUCTION DIAGRAM

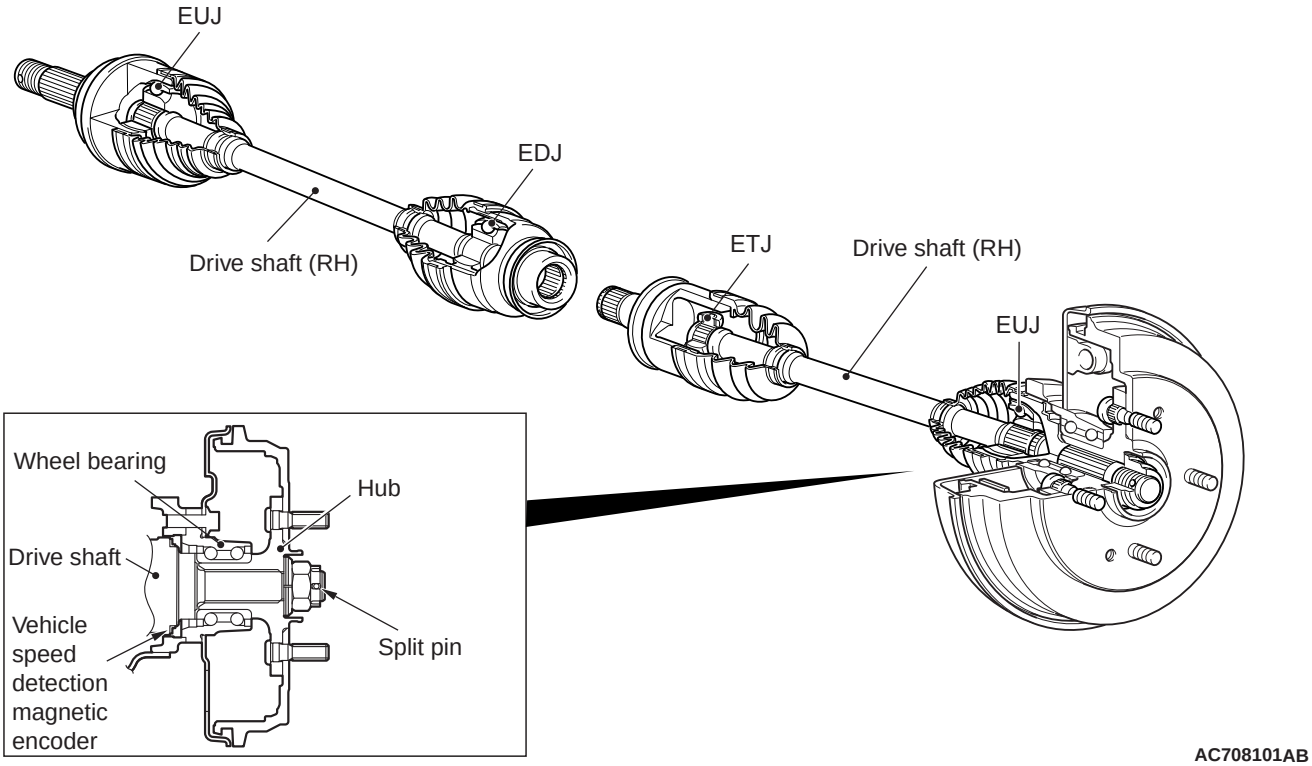
EUJ
EDJ
Drive shaft (RH)
ETJ
Drive shaft (RH)
EUJ
Wheel bearing
Hub
Drive shaft
Vehicle speed detection magnetic encoder
Split pin
AC708101AB

CHECK SUSPENSION SYSTEM FOR DAMAGE AND LOOSENESS

1. Check each portion of suspension for damage visually.
2. Check each installation bolt and nut for looseness by spanner or similar tool.

FRONT SUSPENSION

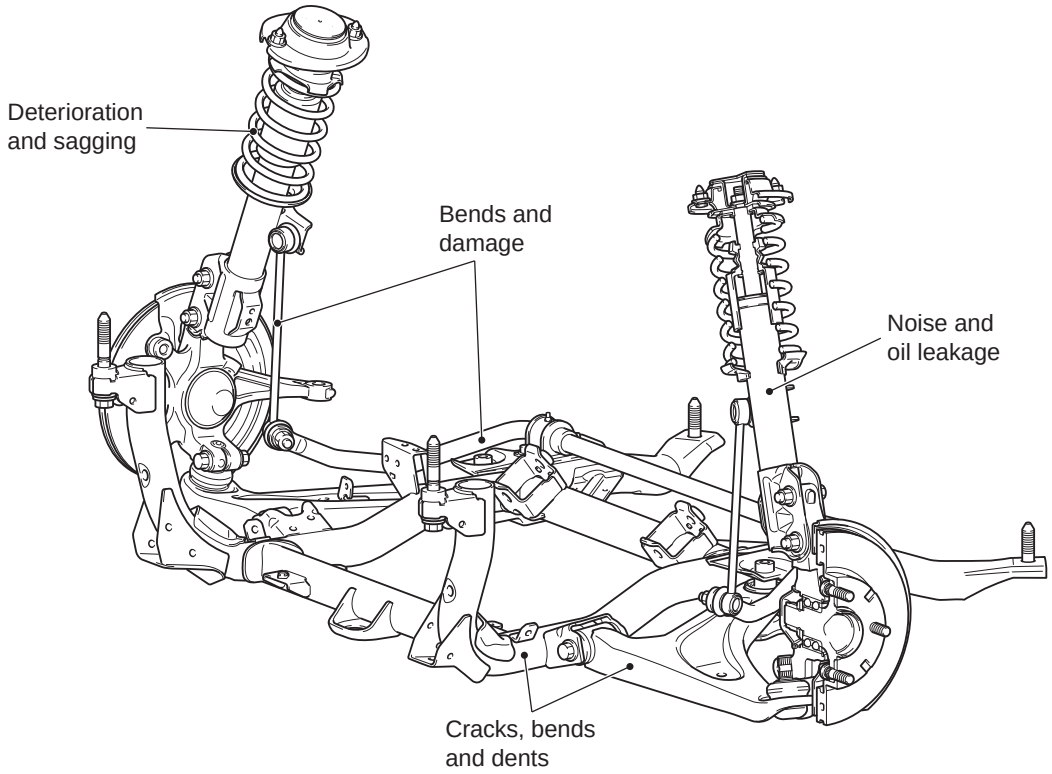

REAR SUSPENSION

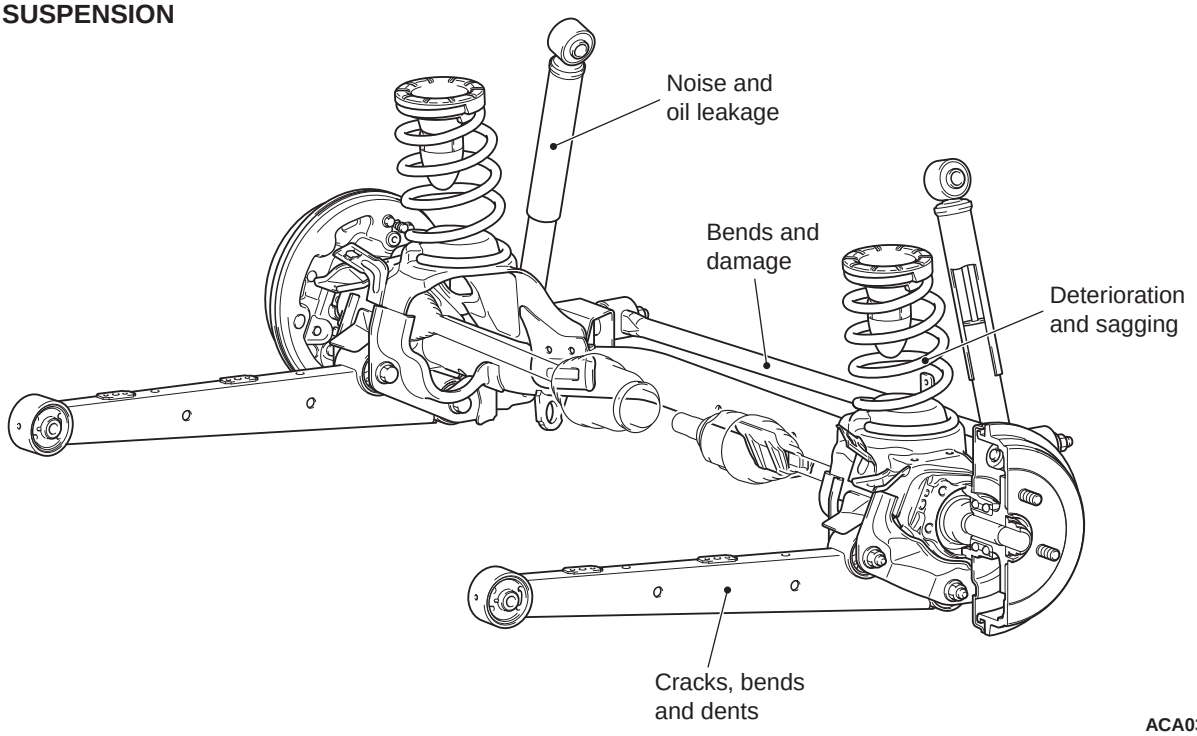

ACA03008AB

CHECK SUSPENSION ARM BALL JOINTS FOR PLAY, AND DUST COVERS FOR DAMAGE

LOWER ARM BALL JOINT PLAY CHECK

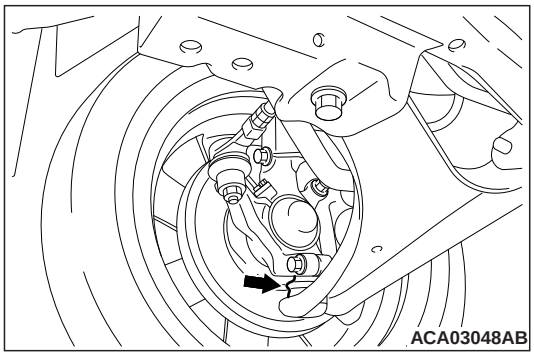

1. Raise the vehicle.
2. Move the lower arm up and down by hand, and check for the ball joint axial play. If there is a play, replace the lower arm assembly.

LOWER ARM BALL JOINT DUST COVER CHECK

⚠ CAUTION

Be careful not to damage the lower arm ball joint dust cover during maintenance.

1. Using your fingers, press the dust cover to check for a crack or damage.
2. If the dust cover has any crack or damage, replace the lower arm assembly.

   NOTE: If the dust cover has a crack or damage, the ball joint could be damaged.
   If the dust cover is damaged during the maintenance, replace it.

CHECK DRIVESHAFT BOOTS FOR GREASE LEAKS AND DAMAGE

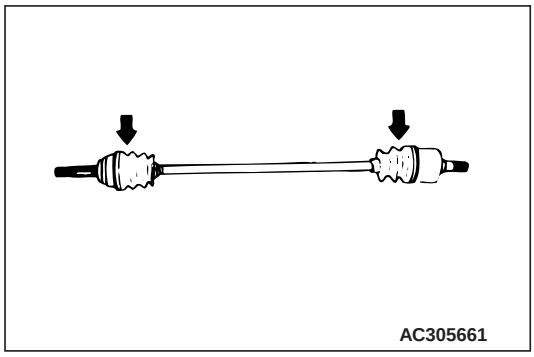

Check the driveshaft boots for damage.

5.1.2. Stub axles

"Not Applicable"

CHECK FRONT AND REAR WHEEL BEARINGS FOR PLAY <FRONT WHEEL>

1. Remove the caliper assembly and the brake disc, then retain them using a wire or the like to prevent from falling.

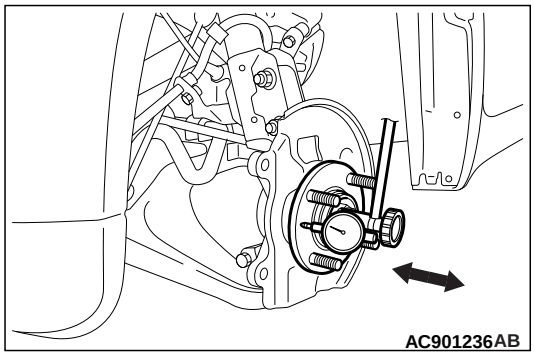

2. Set a dial gauge as shown in the figure. Move the hub in the axial direction and measure the play.

   Limit value: 0.05 mm
3. If the limit value is exceeded, replace the wheel bearing.
4. After checking, install the brake disc and the caliper assembly, and tighten the caliper mounting bolt to the specified torque.

   Tightening torque: 100 ± 10 N·m

<REAR WHEEL>

1. Remove the brake drum.

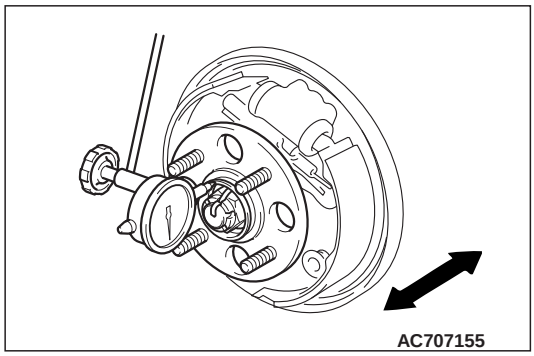

2. Set a dial gauge as shown in the figure. Move the hub in the axial direction and measure the play.

   Limit value: 0.05 mm
3. When the play exceeds the limit value, replace the wheel bearing.

M6140100200087

5.1.3. Wheel bearings

M6140100300084

"Not Applicable"

5.2. Wheels and tyres

5.2.1. Road wheel hub

M6140200100087

"Not Applicable"

5.2.2. Wheels

M6140200200103

GENERAL

The rolling resistance reduction tyres have been adopted for the front tyres (145/65R15 72S) and rear tyres (175/55R15 77V).The wide rear tyres have been adopted for cornering ability, and the narrow front tyres have been adopted to be under-steered near the limit range.

- The aluminium wheels have been adopted.
- A lightweight, compact flat tyre temporary repair kit has been equipped to all models.

FLAT TYRE TEMPORARY REPAIR KIT

The flat tyre temporary repair kit consists of the flat tyre temporary repair agent set and the air compressor, and the kit is stored under the rear right seat.

1. The flat tyre temporary repair agent set consists of the flat tyre temporary repair agent, injection hose, valve core, valve core turner, vehicle speed restriction sticker, and user's manual.
2. Power supply for the air compressor is available at the cigarette lighter (DC 12V) only.
3. When repairing or replacing the tyre to which the flat tyre temporary repair kit was used, it is necessary to drain the repair agent remaining in the tyre.
4. When a puncture point can be identified, the tyre can be repaired according to a normal procedure. However, if the puncture point cannot be identified, replace the tyre.

SPECIFICATIONS

Items		Specifications
Flat tyre temporary repair agent	Repair agent volume mL	320
	Components %	Natural latex rubber: 50, Adhesive: 20, Propylene glycol: 30
	Repairable area	Nail puncture hole of 4 mm or less at tyre tread
	Shelf life	Shelf life is indicated on the repair agent bottle.
	Disposal method	Waste oil disposal
Air compressor	Relief valve operating pressure kPa	350
	Air compressor maximum current	10A or less
	Air gauge indication error	±3% or less

5.2.3. Tyres

M6140200300100

GENERAL

The rolling resistance reduction tyres have been adopted for the front tyres (145/65R15 72S) and rear tyres (175/55R15 77V).The wide rear tyres have been adopted for cornering ability, and the narrow front tyres have been adopted to be under-steered near the limit range.

- The aluminium wheels have been adopted.
- A lightweight, compact flat tyre temporary repair kit has been equipped to all models.

FLAT TYRE TEMPORARY REPAIR KIT

The flat tyre temporary repair kit consists of the flat tyre temporary repair agent set and the air compressor, and the kit is stored under the rear right seat.

1. The flat tyre temporary repair agent set consists of the flat tyre temporary repair agent, injection hose, valve core, valve core turner, vehicle speed restriction sticker, and user's manual.
2. Power supply for the air compressor is available at the cigarette lighter (DC 12V) only.

3. When repairing or replacing the tyre to which the flat tyre temporary repair kit was used, it is necessary to drain the repair agent remaining in the tyre.
4. When a puncture point can be identified, the tyre can be repaired according to a normal procedure. However, if the puncture point cannot be identified, replace the tyre.

SPECIFICATIONS

Items		Specifications
Flat tyre temporary repair agent	Repair agent volume mL	320
	Components %	Natural latex rubber: 50, Adhesive: 20, Propylene glycol: 30
	Repairable area	Nail puncture hole of 4 mm or less at tyre tread
	Shelf life	Shelf life is indicated on the repair agent bottle.
	Disposal method	Waste oil disposal
Air compressor	Relief valve operating pressure kPa	350
	Air compressor maximum current	10A or less
	Air gauge indication error	±3% or less

TPMS TRANSMITTER CHECK

According to the following procedures, identify which registered TPMS transmitter corresponds to which wheel, and check the tyre pressure and acceleration value of each TPMS transmitter.

1. Check the data list "Air Pressure, Tyre1, 2, 3, 4" and write down the tyre pressure for all wheels.
   NOTE: The display at this time is the data received most recently.
2. Perform the following procedures for four wheels in order, identify the wheel by checking the tyre pressure of each wheel.
   (1) Change the pressure of tyre for 20 kPa or more so that the TPMS transmitter sends the latest sensor data (The tyre pressure can either be decreased or increased).
   (2) Check the data list screen to determine which tyre number corresponds to the wheel whose tyre pressure has changed.

   NOTE:
   - *It may take approximately one minute that the data of tyre pressure change is displayed on the M.U.T.-III screen.*
   - *If the data of tyre pressure change is not displayed on the M.U.T.-III screen, the most possible cause is that the radio wave sent from the TPMS transmitter cannot be received. In this case, the radio wave may be received by performing the procedures from (1) again after turning the tyre to change the TPMS transmitter position. If the tyre pressure change is still not displayed on the M.U.T.-III screen, the TPMS transmitter in which the ID code is not registered may be installed, or the TPMS transmitter may be faulty. Therefore, perform ID code registration or replace the TPMS transmitter according to the instructions of troubleshooting for DTCs. (At this time, do not register the ID codes or replace the TPMS transmitter.)*
3. Check the tyre pressure or acceleration value shown in the screen (if needed).
4. After checking by the tyre pressure change, adjust the checked tyre pressure to the proper value.

5.3. Suspension system

5.3.1. Springs and stabiliser

M6140300100084

"Not Applicable"

5.3.2. Shock absorbers

M6140300200081

"Not Applicable"

5.3.2.1. efficiency testing of damping (X)2

M6140310100085

"Not Applicable"

5.3.3. Torque tubes, radius arms, wishbones and suspension arms

M6140300300088

"Not Applicable"

5.3.4. Suspension joints

M6140300400085

"Not Applicable"

5.3.5. Air suspension

M6140300500082

"Not Applicable"

GROUP 6

CHASSIS AND CHASSIS ATTACHMENTS

CONTENTS

6.1. CHASSIS OR FRAME AND ATTACHMENTS 6-2

6.1.1. General condition 6-2
6.1.2. Exhaust pipes and silencers 6-2
6.1.3. Fuel tank and pipes (including heating fuel tank and pipes) 6-2
6.1.4. Bumpers, lateral protection and rear underrun devices 6-2
6.1.5. Spare wheel carrier (if fitted) 6-2
6.1.6. Mechanical coupling and towing device 6-2
6.1.7. Transmission 6-2
6.1.8. Engine mountings 6-2
6.1.9 Engine performance (X) 2 6-2

6.2. CAB AND BODYWORK 6-2

6.2.1. Condition 6-2
6.2.2. Mounting 6-2
6.2.3. Doors and door catches 6-2
6.2.4. Floor 6-2
6.2.5. Driver's seat 6-3
6.2.6. Other seats 6-3
6.2.7. Driving controls 6-3
6.2.8. Cab steps 6-3
6.2.9. Other interior and exterior fittings and equipment 6-3
6.2.10. Mudguards (wings), spray suppression devices 6-3
6.2.11. Stand 6-3
6.2.12. Handgrips and footrests 6-3

6.1. Chassis or frame and attachments

6.1.1. General condition

M6150100100081

"Not Applicable"

6.1.2. Exhaust pipes and silencers

M6150100200088

"Not Applicable"

6.1.3. Fuel tank and pipes (including heating fuel tank and pipes)

M6150100300085

"Not Applicable"

6.1.4. Bumpers, lateral protection and rear underrun devices

M6150100400082

"Not Applicable"

6.1.5. Spare wheel carrier (if fitted)

M6150100500089

"Not Applicable"

6.1.6. Mechanical coupling and towing device

M6150100600086

"Not Applicable"

6.1.7. Transmission

M6150100700083

"Not Applicable"

6.1.8. Engine mountings

M6150100800080

"Not Applicable"

6.1.9 Engine performance (X) 2

M6150100900087

"Query raised for this content"

6.2. Cab and bodywork

6.2.1. Condition

M6150200100088

"Not Applicable"

6.2.2. Mounting

M6150200200085

"Not Applicable"

6.2.3. Doors and door catches

M6150200300082

"Not Applicable"

6.2.4. Floor

M6150200400089

"Not Applicable"

6.2.5. Driver's seat

M6150200500086

"Not Applicable"

6.2.6. Other seats

M6150200600083

- Max Number of seats total (excluding driver's seat)
  - 3 <STATION WAGON>
  - 1 <VAN>
- Number of rear-facing seats - 0

6.2.7. Driving controls

M6150200700080

"Not Applicable"

6.2.8. Cab steps

M6150200800087

"Not Applicable"

6.2.9. Other interior and exterior fittings and equipment

M6150200900084

"Not Applicable"

6.2.10. Mudguards (wings), spray suppression devices

M6150201000084

"Not Applicable"

6.2.11. Stand

M6150201100081

"Not Applicable"

6.2.12. Handgrips and footrests

M6150201200088

"Not Applicable"

GROUP 7

OTHER EQUIPMENT

CONTENTS

7.1. SAFETY-BELTS/BUCKLES AND RESTRAINT SYSTEMS (AS REGARDS L CATEGORY: L6/L7). 7-2

7.1.1. Security of safety-belts/buckles mounting 7-2

7.1.2. Condition of safety-belts/buckles. . . . 7-3

7.1.3. Safety belt load limiter. 7-4

7.1.4. Safety belt Pre-tensioners. 7-5

7.1.5. Airbag 7-11

7.1.6. SRS Systems 7-17

7.2. FIRE EXTINGUISHER (X)2. 7-23

7.3. LOCKS AND ANTI-THEFT DEVICE 7-23

7.4. WARNING TRIANGLE (IF REQUIRED) (X)2. 7-23

7.5. FIRST AID KIT. (IF REQUIRED) (X)2 7-23

7.6. WHEEL CHOCKS (WEDGES) (IF REQUIRED) (X)2. 7-23

7.7. AUDIBLE WARNING DEVICE. . . 7-23

7.8. SPEEDOMETER 7-23

7.9. TACHOGRAPH (IF FITTED/REQUIRED) 7-23

7.10. SPEED LIMITATION DEVICE (IF FITTED/ REQUIRED) 7-23

7.11 ODOMETER IF AVAILABLE (X)2 7-24

7.12 ELECTRONIC STABILITY CONTROL (ESC) IF FITTED/REQUIRED. 7-24

7.1. Safety-belts/buckles and restraint systems (as regards L category: L6/L7)

7.1.1. Security of safety-belts/buckles mounting

M6160100100082

SEAT BELT

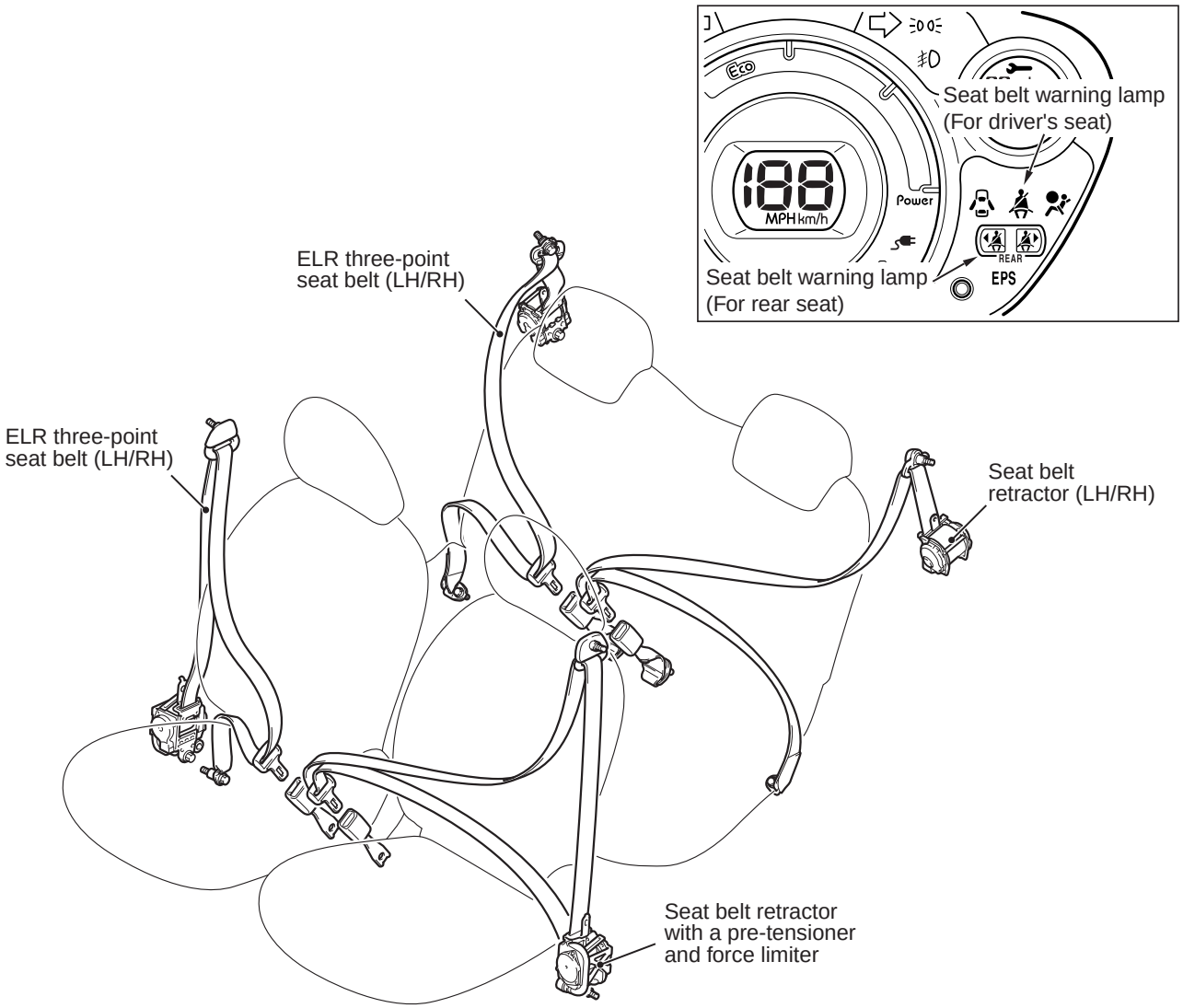

ACA02492AB

The seat belt has the following features:

<Front seat belt>

- Together with the adoption of ELR three-point seat belt, the seatbelt retractor with pre-tensioner force limiter has been adopted to enhance safety.
- The warning lamp is included on the combination meter to encourage the driver to fasten the seat belt when the belt is not fastened.

<Rear seat belt>

- Three-point seat belts with ELR have been adopted.
- The warning lamp is included on the combination meter to encourage the rear passenger to fasten the seat belt when the belt is not fastened.

7.1.2. Condition of safety-belts/buckles.

M6160100200089

SEAT BELT

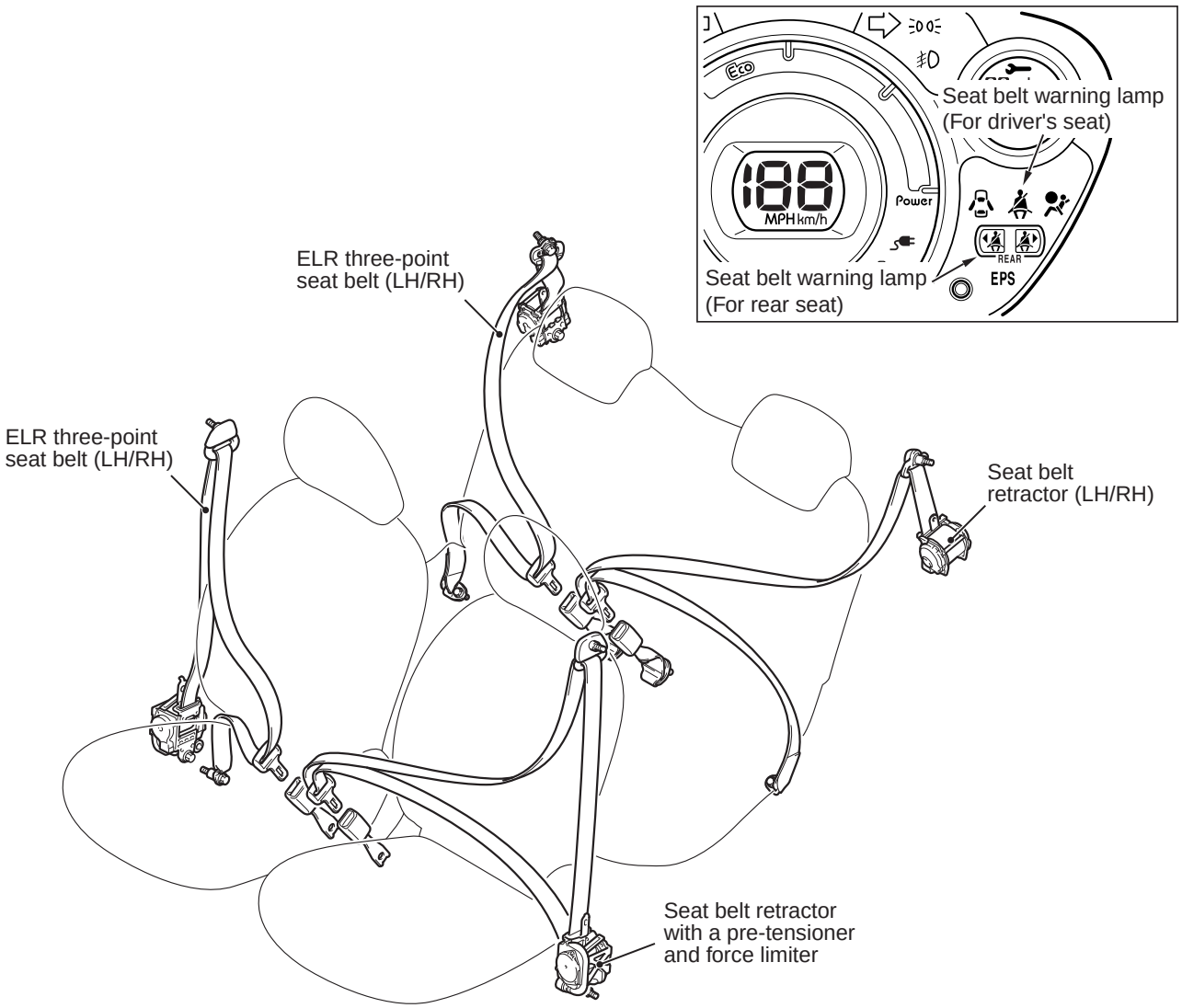

ACA02492AB

The seat belt has the following features:

<Front seat belt>

- Together with the adoption of ELR three-point seat belt, the seatbelt retractor with pre-tensioner force limiter has been adopted to enhance safety.
- The warning lamp is included on the combination meter to encourage the driver to fasten the seat belt when the belt is not fastened.

<Rear seat belt>

- Three-point seat belts with ELR have been adopted.
- The warning lamp is included on the combination meter to encourage the rear passenger to fasten the seat belt when the belt is not fastened.

7.1.3. Safety belt load limiter

M6160100300086

SEAT BELT

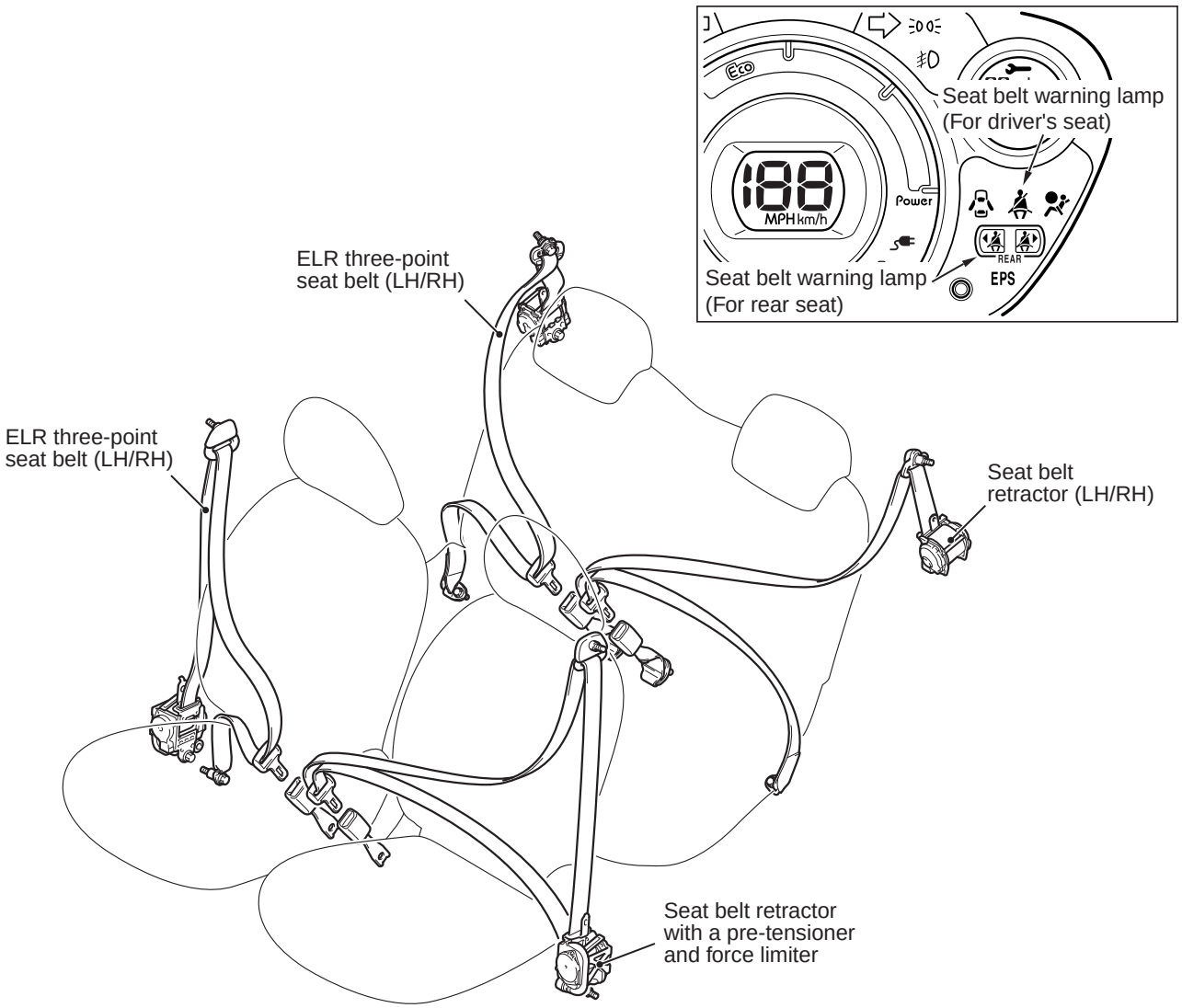

The seat belt has the following features:

<Front seat belt>

- Together with the adoption of ELR three-point seat belt, the seatbelt retractor with pre-tensioner force limiter has been adopted to enhance safety.
- The warning lamp is included on the combination meter to encourage the driver to fasten the seat belt when the belt is not fastened.

<Rear seat belt>

- Three-point seat belts with ELR have been adopted.
- The warning lamp is included on the combination meter to encourage the rear passenger to fasten the seat belt when the belt is not fastened.

7.1.4. Safety belt Pre-tensioners

M6160100400083

GENERAL INFORMATION

- The SRS* air bag is a system that is effective with the seat belt fastened, and it is designed as a supplemental system of the seat belt.
- To provide a better safety upon impact, the driver's and front passenger's air bags, the side air bags, the curtain air bags as well as the seat belts with pre-tensioner have been installed to all vehicles as standard.
- The driver's and passenger's air bag is activated when an impact exceeding the threshold is applied upon a frontal collision, and the cushion air bag is instantaneously inflated to protect the head and chest areas of the front seat passengers.
- The passenger’s air bag cut off switch which can enable and disable the passenger’s (front) air bag has been equipped in the glove box <LHD> or instrument panel centre lower panel assembly <RHD>.
- The side air bag is activated when an impact exceeds the threshold upon a side collision, and the cushion air bag is instantaneously inflated to protect the chest area of the front seat passengers.
- The curtain air bag is activated upon a side collision as well as the side air bag to protect the heads of the front and rear seat passengers.
- High voltage shutdown function shuts off the high voltage as needed upon a frontal collision, side collision, and rear-end collision in order to reduce the risk for the occupants, rescuer, and rescue team of the electrical hazard caused by high voltage electric leakage.
- For the inflator of all the air bag modules, the gas which is harmless to the human body has been adopted.
- The pre-tensioner is activated simultaneously with the deployment of driver's and front passenger's air bags in case of a frontal collision, and prevents the forward travel of the occupants when a collision occurs.

⚠ CAUTION

Do not disassemble the SRS air bag components or seat belt with pre-tensioner. Also, do not apply an impact.

*NOTE: *: SRS (Supplemental Restraint System)*

CONSTRUCTION DIAGRAM

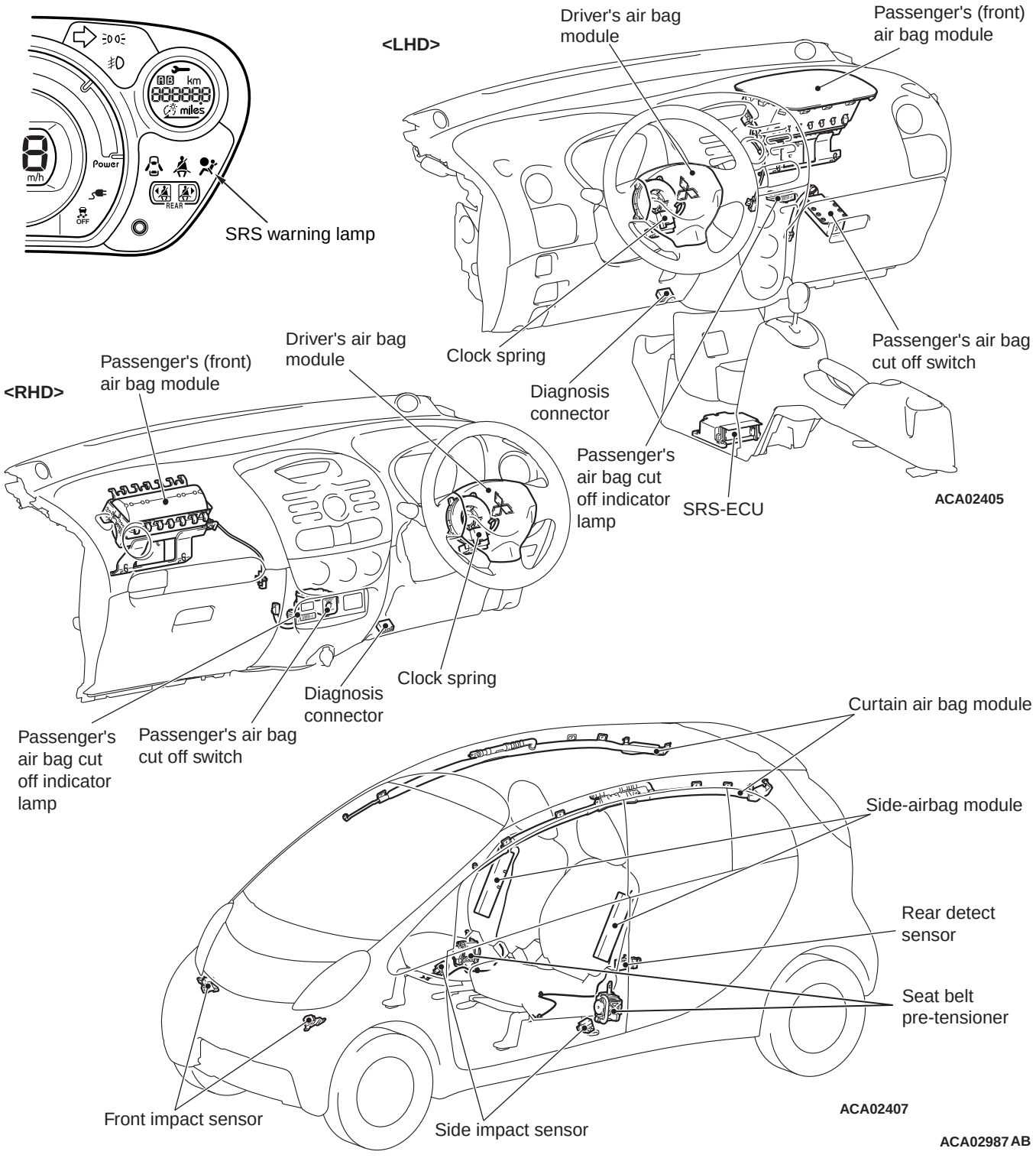

CAUTION LABELS

The labels indicating the precautions for handling and maintenance of SRS air bags and seat belt with pre-tensioner are adhered to the locations shown in the above figures.

Driver's air bag module

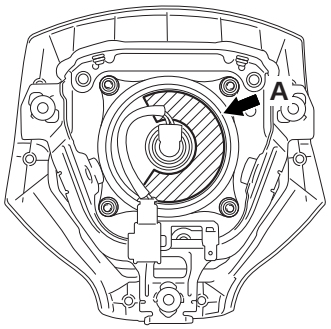

Passenger's (front) air bag module <LHD>

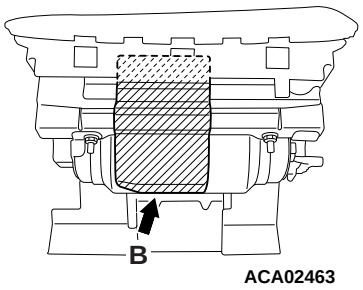

Passenger's (front) air bag module <RHD>

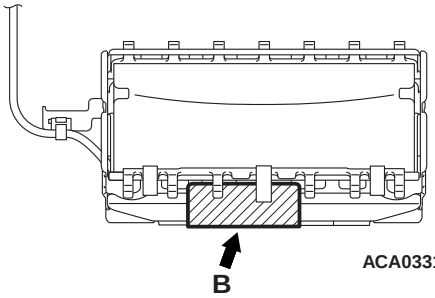

SRS-ECU

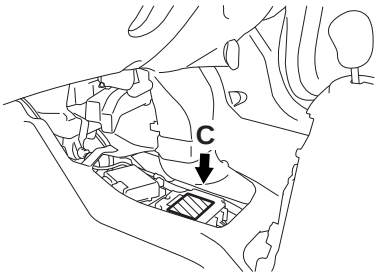

Sunvisor *

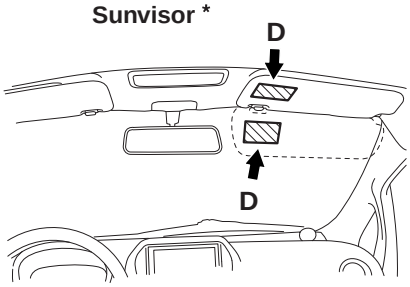

Seat belt pre-tensioner
<Driver's side> **<Passenger's side>**

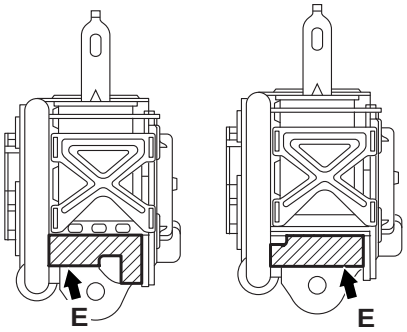

Side-airbag module (right and left)

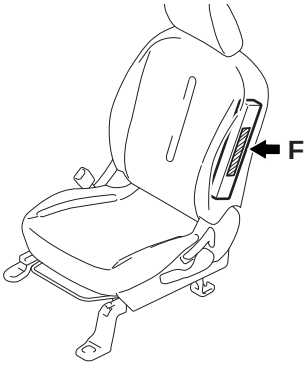

Curtain air bag module (right and left)

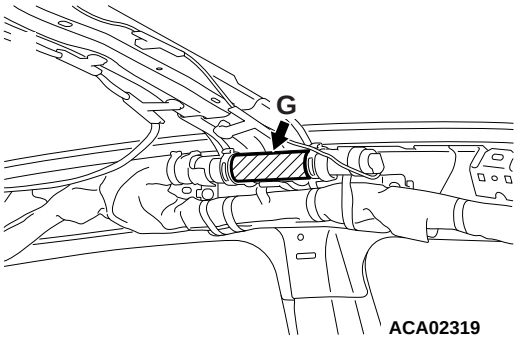

Instrument panel <RHD>

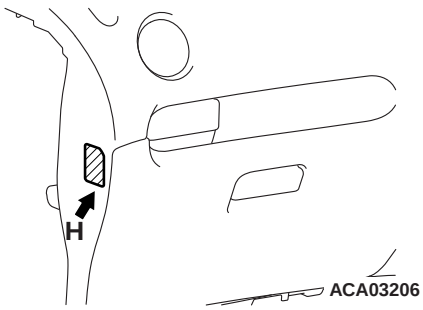

Glove box <LHD>

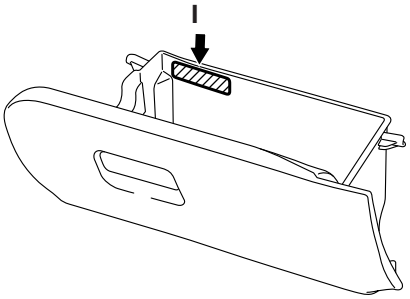

Passenger's air bag cut off switch

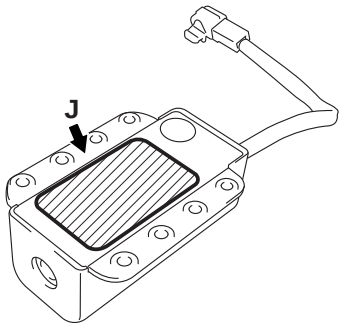

*NOTE: *: Indicates LHD vehicles. For RHD vehicles, the specified application position of label is symmetrical to this.*

Label content	
A	DANGER FLAMMABLE EXPLOSIVE DO NOT: DISASSEMBLE; HEAT; INCINERATE; APPLY ELECTRICITY; OR STORE AT HIGH TEMPERATURE (93°C or HIGHER). REFER TO WORKSHOP MANUAL FOR DETAILS.
B	WARNING FLAMMABLE EXPLOSIVE SRS AIR BAG MODULE TO AVOID SERIOUS INJURY: • DO NOT REPAIR, DISASSEMBLE OR TAMPER. • AVOID CONTACT WITH FLAME OR ELECTRICITY. • DO NO DIAGNOSIS/USE NO TEST EQPT OR PROBES. • STORE BELOW 200°F (93°C). • BEFORE DOING ANY WORK INVOLVING MODULE. READ SERVICE MANUAL FOR IMPORTANT FURTHER DATA.
C	CAUTION: DO NOT DISASSEMBLE OR DROP. IF DEFECT REFER TO SERVICE MANUAL.
D	WARNING • DEATH OR SERIOUS INJURY can occur. • DO NOT place rear-facing child seat on this seat with airbag.
E	SEAT BELT PRETENSIONER CAUTION THIS ASSEMBLY CONTAINS AN EXPLOSIVE INITIATOR. DANGER FLAMMABLE MATERIAL TO PREVENT PERSONAL INJURY • DO NOT REMOVE. INSTALL IT INTO ANOTHER VEHICLE. • SERVICE OR DISPOSE OF IT AS DIRECTED IN THE REPAIR MANUAL.
F, G	DANGER FLAMMABLE EXPLOSIVE DO NOT: DISASSEMBLE; HEAT; INCINERATE; APPLY ELECTRICITY; OR STORE AT HIGH TEMPERATURE (93°C or HIGHER). REFER TO WORKSHOP MANUAL FOR DETAILS.
H	 AC311947
I	 ACA02058 AB
J	CAUTION • Do Not Disassemble or Alter • See Owner’s Manual

SRS SYSTEM CIRCUIT DIAGRAM

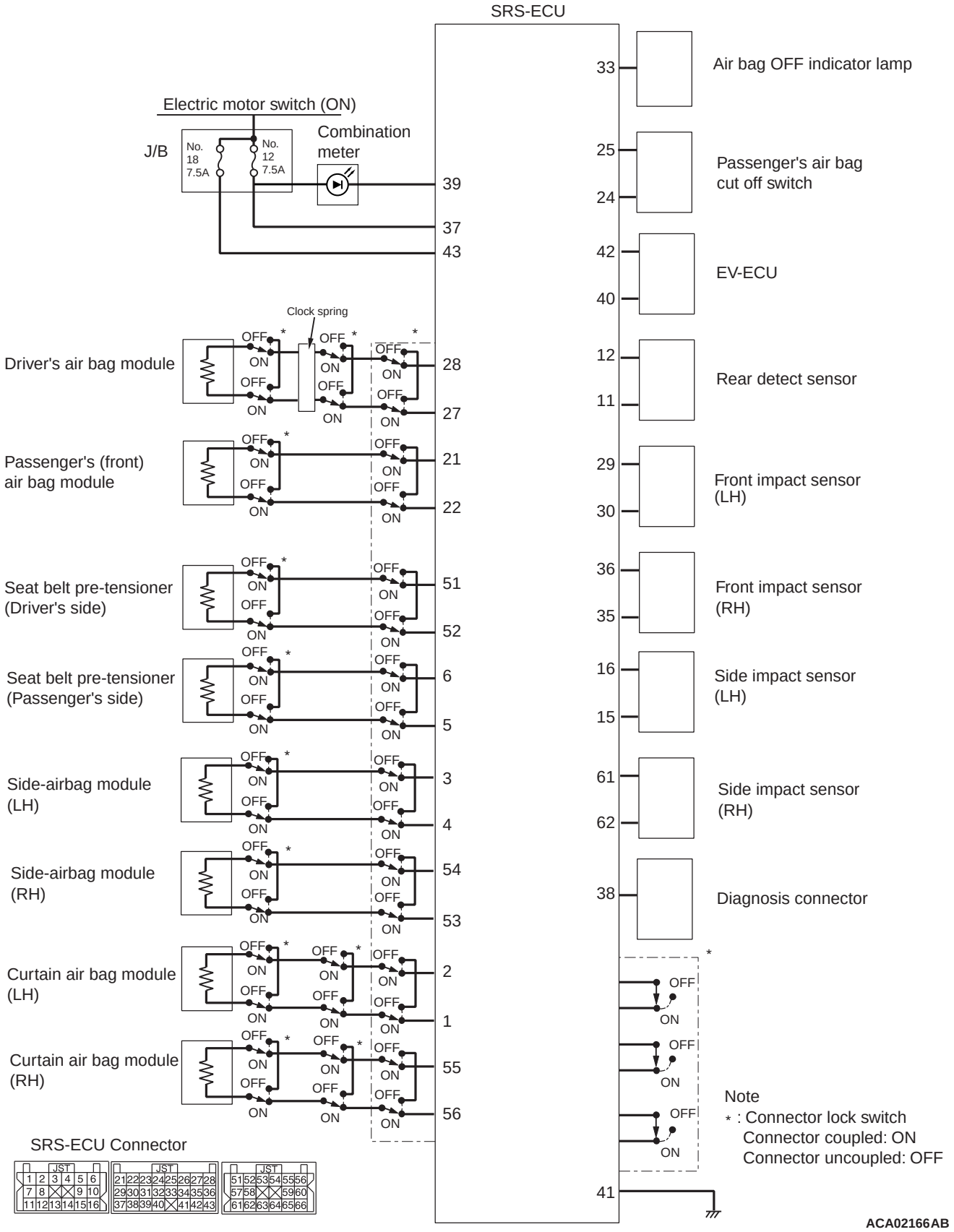

ACA02166AB

Number in system circuit diagram	Circuit name	Universal harness Wire diameter and colour
1	Left-side curtain air bag squib (+)	0.5Y
2	Left-side curtain air bag squib (-)	0.5Y-GR
3	Left-side side-airbag squib (+)	0.5Y-G
4	Left-side side-airbag squib (-)	0.5Y-R
5	Front passenger's seat belt pre-tensioner squib (-)	0.5R <LHD> 0.5W <RHD>
6	Front passenger's seat belt pre-tensioner squib (+)	0.5G <LHD> 0.5L <RHD>
11	Rear detect sensor (-)	0.5V
12	Rear detect sensor (+)	0.5LG
15	Left-side side impact sensor (-)	0.5R
16	Left-side side impact sensor (+)	0.5P
21	Passenger's (front) air bag squib (+)	0.5Y-G
22	Passenger's (front) air bag squib (-)	0.5Y-R
24	Passenger’s air bag cut off switch (-)	0.5BR
25	Passenger’s air bag cut off switch (+)	0.5LG
27	Driver's air bag squib (-)	0.5Y-B
28	Driver's air bag squib (+)	0.5Y
29	Left-side front impact sensor (+)	0.5GR
30	Left-side front impact sensor (-)	0.5LG
33	Passenger’s air bag OFF indicator lamp	0.5W
35	Right-side front impact sensor (-)	0.5V
36	Right-side front impact sensor (+)	0.5P
37	Electric motor switch power supply (fuse No. 15)	0.3SB
38	Diagnosis connector	0.3V
39	Combination neter	0.3G
40	EV-ECU (-)	0.3L
41	Earth	0.5B
42	EV-ECU (+)	0.3GR
43	Electric motor switch power supply (fuse No. 21)	0.5G <LHD> 0.5SB <RHD>
51	Driver's seat belt pre-tensioner squib (+)	0.5L <LHD> 0.5G <RHD>
52	Driver's seat belt pre-tensioner squib (-)	0.5W <LHD> 0.5R <RHD>
53	Right-side side-airbag squib (-)	0.5Y-B
54	Right-side side-airbag squib (+)	0.5Y
55	Right-side curtain air bag squib (+)	0.5Y-L
56	Right-side curtain air bag squib (-)	0.5Y-V
61	Right-side side impact sensor (-)	0.5L

Number in system circuit diagram	Circuit name	Universal harness Wire diameter and colour
62	Right-side side impact sensor (+)	0.5LG

NOTE: For how to read the harness wire diameter and wire colour, refer to the Electrical Wiring Diagram.

7.1.5. Airbag

M6160100500080

GENERAL INFORMATION

- The SRS* air bag is a system that is effective with the seat belt fastened, and it is designed as a supplemental system of the seat belt.
- To provide a better safety upon impact, the driver's and front passenger's air bags, the side air bags, the curtain air bags as well as the seat belts with pre-tensioner have been installed to all vehicles as standard.
- The driver's and passenger's air bag is activated when an impact exceeding the threshold is applied upon a frontal collision, and the cushion air bag is instantaneously inflated to protect the head and chest areas of the front seat passengers.
- The passenger’s air bag cut off switch which can enable and disable the passenger’s (front) air bag has been equipped in the glove box <LHD> or instrument panel centre lower panel assembly <RHD>.
- The side air bag is activated when an impact exceeds the threshold upon a side collision, and the cushion air bag is instantaneously inflated to protect the chest area of the front seat passengers.
- The curtain air bag is activated upon a side collision as well as the side air bag to protect the heads of the front and rear seat passengers.
- High voltage shutdown function shuts off the high voltage as needed upon a frontal collision, side collision, and rear-end collision in order to reduce the risk for the occupants, rescuer, and rescue team of the electrical hazard caused by high voltage electric leakage.
- For the inflator of all the air bag modules, the gas which is harmless to the human body has been adopted.
- The pre-tensioner is activated simultaneously with the deployment of driver's and front passenger's air bags in case of a frontal collision, and prevents the forward travel of the occupants when a collision occurs.

⚠ CAUTION

Do not disassemble the SRS air bag components or seat belt with pre-tensioner. Also, do not apply an impact.

*NOTE: *: SRS (Supplemental Restraint System)*

CONSTRUCTION DIAGRAM

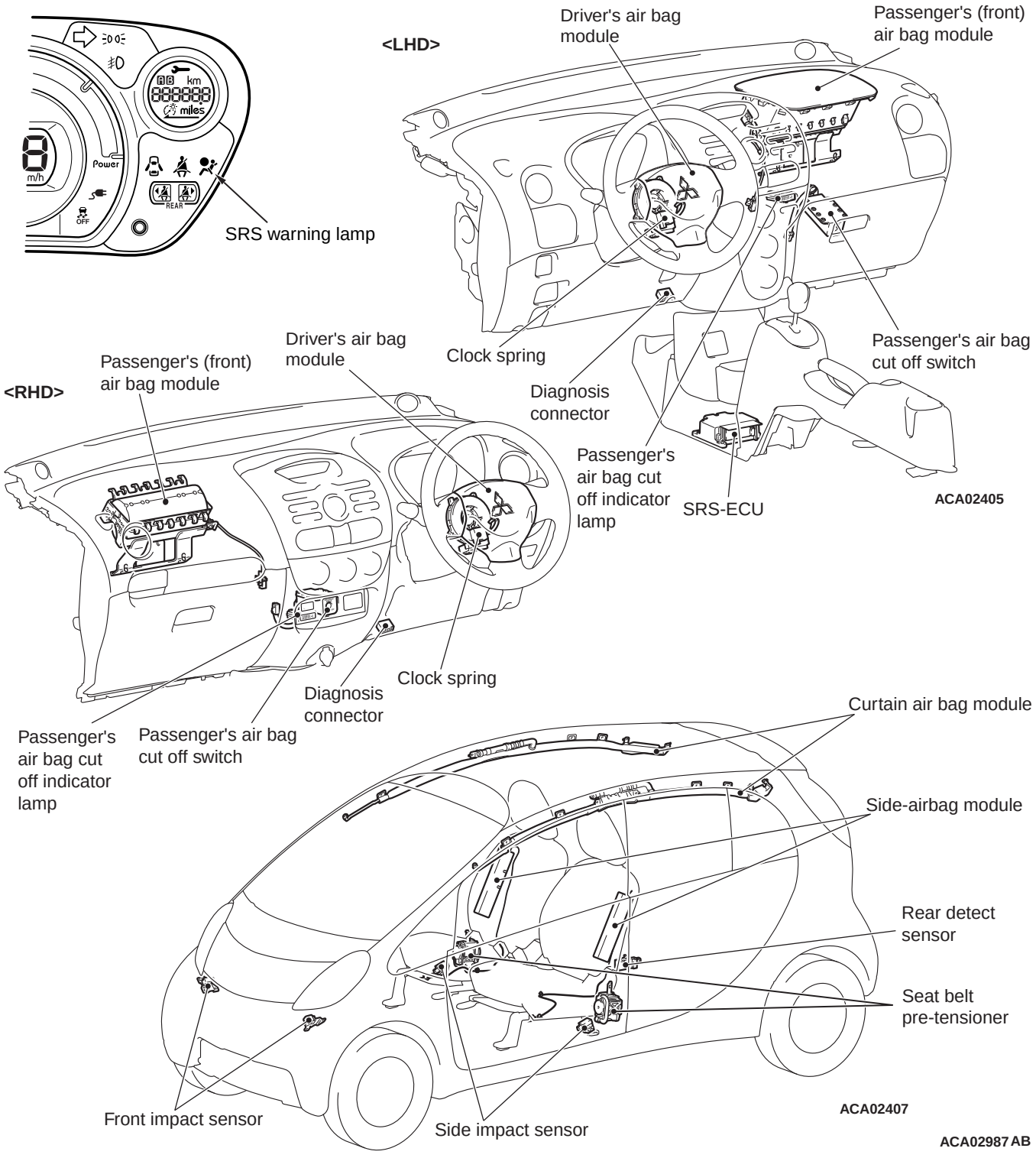

CAUTION LABELS

The labels indicating the precautions for handling and maintenance of SRS air bags and seat belt with pre-tensioner are adhered to the locations shown in the above figures.

Driver's air bag module

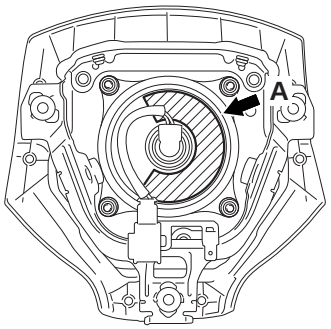

Passenger's (front) air bag module <LHD>

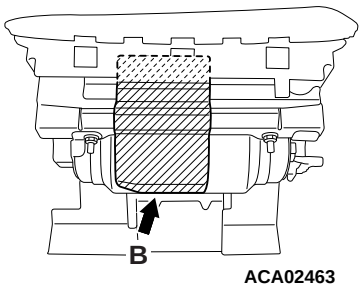

Passenger's (front) air bag module <RHD>

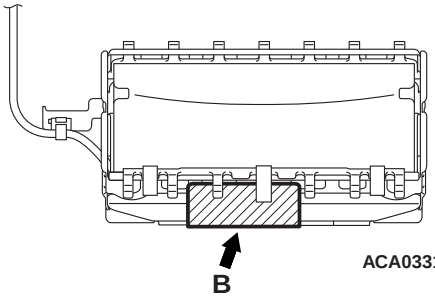

SRS-ECU

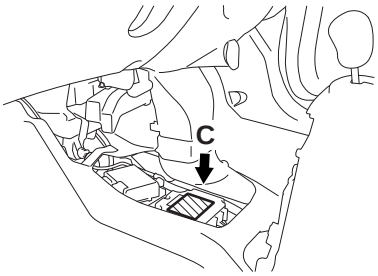

Sunvisor *

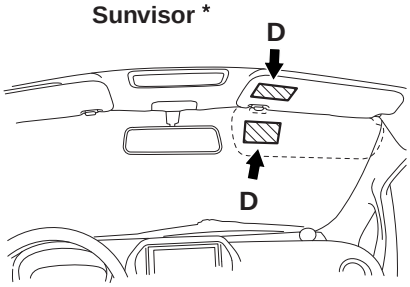

Seat belt pre-tensioner
<Driver's side> **<Passenger's side>**

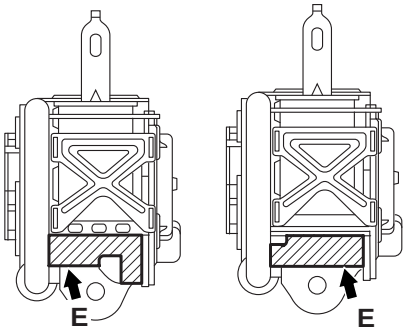

Side-airbag module (right and left)

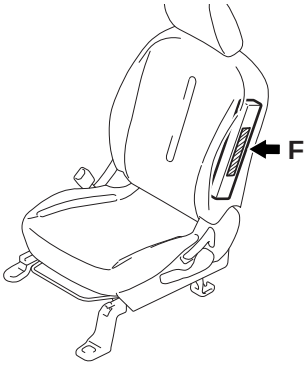

Curtain air bag module (right and left)

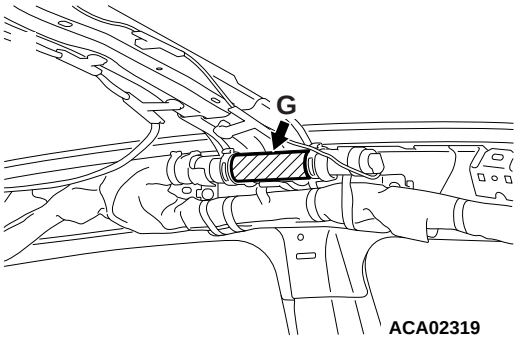

Instrument panel <RHD>

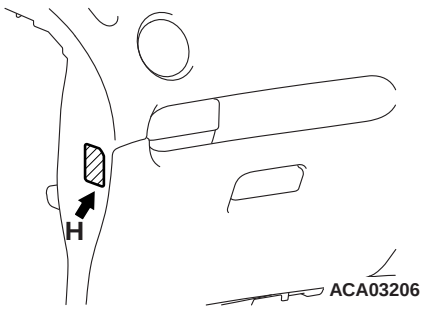

Glove box <LHD>

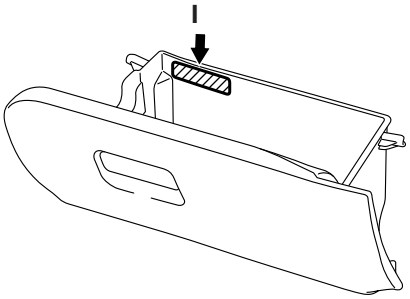

Passenger's air bag cut off switch

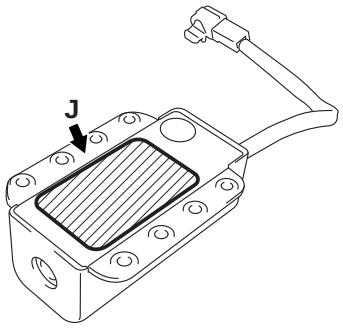

*NOTE: *: Indicates LHD vehicles. For RHD vehicles, the specified application position of label is symmetrical to this.*

Label content	
A	DANGER FLAMMABLE EXPLOSIVE DO NOT: DISASSEMBLE; HEAT; INCINERATE; APPLY ELECTRICITY; OR STORE AT HIGH TEMPERATURE (93°C or HIGHER). REFER TO WORKSHOP MANUAL FOR DETAILS.
B	WARNING FLAMMABLE EXPLOSIVE SRS AIR BAG MODULE TO AVOID SERIOUS INJURY: • DO NOT REPAIR, DISASSEMBLE OR TAMPER. • AVOID CONTACT WITH FLAME OR ELECTRICITY. • DO NO DIAGNOSIS/USE NO TEST EQPT OR PROBES. • STORE BELOW 200°F (93°C). • BEFORE DOING ANY WORK INVOLVING MODULE. READ SERVICE MANUAL FOR IMPORTANT FURTHER DATA.
C	CAUTION: DO NOT DISASSEMBLE OR DROP. IF DEFECT REFER TO SERVICE MANUAL.
D	WARNING • DEATH OR SERIOUS INJURY can occur. • DO NOT place rear-facing child seat on this seat with airbag.
E	SEAT BELT PRETENSIONER CAUTION THIS ASSEMBLY CONTAINS AN EXPLOSIVE INITIATOR. DANGER FLAMMABLE MATERIAL TO PREVENT PERSONAL INJURY • DO NOT REMOVE. INSTALL IT INTO ANOTHER VEHICLE. • SERVICE OR DISPOSE OF IT AS DIRECTED IN THE REPAIR MANUAL.
F, G	DANGER FLAMMABLE EXPLOSIVE DO NOT: DISASSEMBLE; HEAT; INCINERATE; APPLY ELECTRICITY; OR STORE AT HIGH TEMPERATURE (93°C or HIGHER). REFER TO WORKSHOP MANUAL FOR DETAILS.
H	 AC311947
I	 ACA02058 AB
J	CAUTION • Do Not Disassemble or Alter • See Owner’s Manual

SRS SYSTEM CIRCUIT DIAGRAM

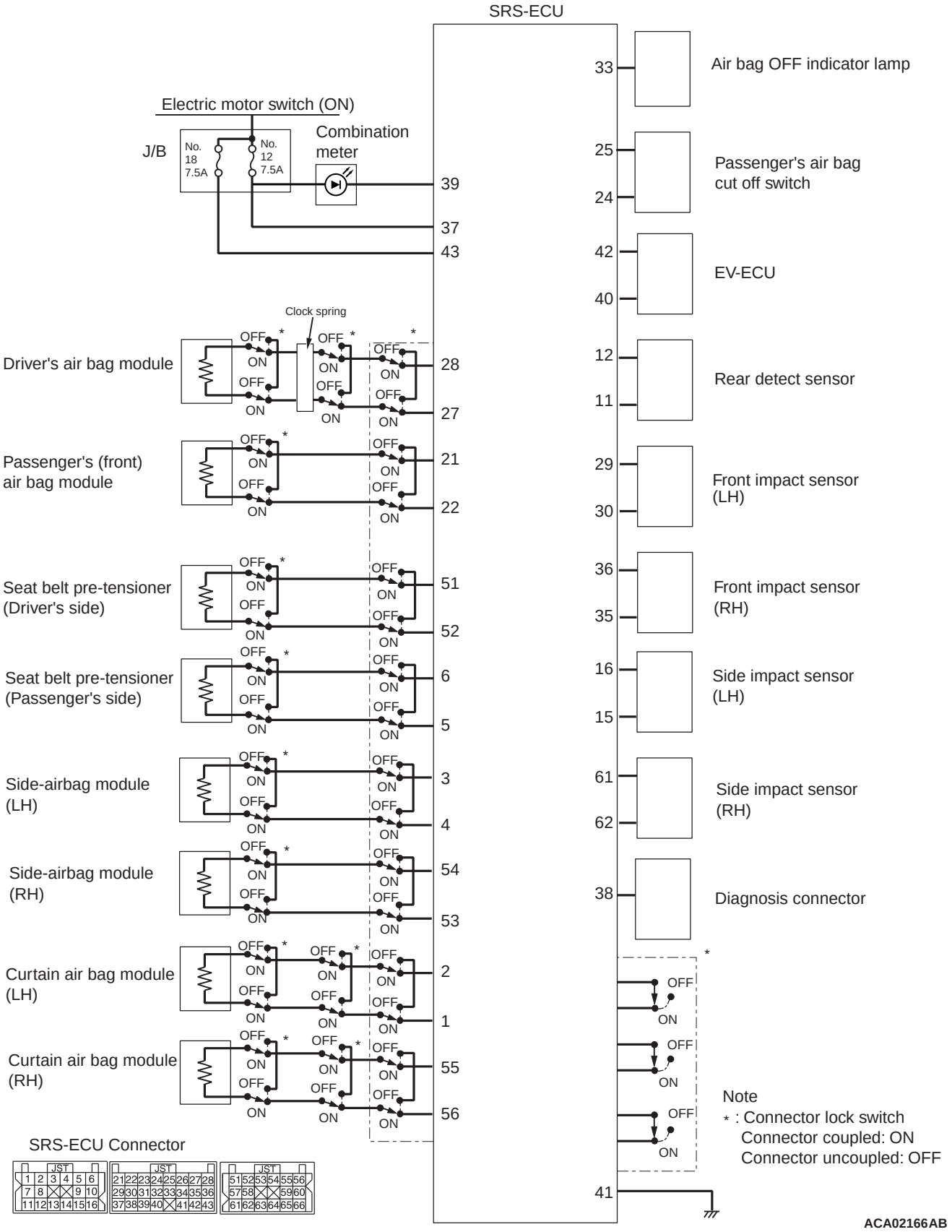

ACA02166AB

Number in system circuit diagram	Circuit name	Universal harness Wire diameter and colour
1	Left-side curtain air bag squib (+)	0.5Y
2	Left-side curtain air bag squib (-)	0.5Y-GR
3	Left-side side-airbag squib (+)	0.5Y-G
4	Left-side side-airbag squib (-)	0.5Y-R
5	Front passenger's seat belt pre-tensioner squib (-)	0.5R <LHD> 0.5W <RHD>
6	Front passenger's seat belt pre-tensioner squib (+)	0.5G <LHD> 0.5L <RHD>
11	Rear detect sensor (-)	0.5V
12	Rear detect sensor (+)	0.5LG
15	Left-side side impact sensor (-)	0.5R
16	Left-side side impact sensor (+)	0.5P
21	Passenger's (front) air bag squib (+)	0.5Y-G
22	Passenger's (front) air bag squib (-)	0.5Y-R
24	Passenger’s air bag cut off switch (-)	0.5BR
25	Passenger’s air bag cut off switch (+)	0.5LG
27	Driver's air bag squib (-)	0.5Y-B
28	Driver's air bag squib (+)	0.5Y
29	Left-side front impact sensor (+)	0.5GR
30	Left-side front impact sensor (-)	0.5LG
33	Passenger’s air bag OFF indicator lamp	0.5W
35	Right-side front impact sensor (-)	0.5V
36	Right-side front impact sensor (+)	0.5P
37	Electric motor switch power supply (fuse No. 15)	0.3SB
38	Diagnosis connector	0.3V
39	Combination neter	0.3G
40	EV-ECU (-)	0.3L
41	Earth	0.5B
42	EV-ECU (+)	0.3GR
43	Electric motor switch power supply (fuse No. 21)	0.5G <LHD> 0.5SB <RHD>
51	Driver's seat belt pre-tensioner squib (+)	0.5L <LHD> 0.5G <RHD>
52	Driver's seat belt pre-tensioner squib (-)	0.5W <LHD> 0.5R <RHD>
53	Right-side side-airbag squib (-)	0.5Y-B
54	Right-side side-airbag squib (+)	0.5Y
55	Right-side curtain air bag squib (+)	0.5Y-L
56	Right-side curtain air bag squib (-)	0.5Y-V
61	Right-side side impact sensor (-)	0.5L

Number in system circuit diagram	Circuit name	Universal harness Wire diameter and colour
62	Right-side side impact sensor (+)	0.5LG

NOTE: For how to read the harness wire diameter and wire colour, refer to the Electrical Wiring Diagram.

7.1.6. SRS Systems

M6160100600087

GENERAL INFORMATION

- The SRS* air bag is a system that is effective with the seat belt fastened, and it is designed as a supplemental system of the seat belt.
- To provide a better safety upon impact, the driver's and front passenger's air bags, the side air bags, the curtain air bags as well as the seat belts with pre-tensioner have been installed to all vehicles as standard.
- The driver's and passenger's air bag is activated when an impact exceeding the threshold is applied upon a frontal collision, and the cushion air bag is instantaneously inflated to protect the head and chest areas of the front seat passengers.
- The passenger’s air bag cut off switch which can enable and disable the passenger’s (front) air bag has been equipped in the glove box <LHD> or instrument panel centre lower panel assembly <RHD>.
- The side air bag is activated when an impact exceeds the threshold upon a side collision, and the cushion air bag is instantaneously inflated to protect the chest area of the front seat passengers.
- The curtain air bag is activated upon a side collision as well as the side air bag to protect the heads of the front and rear seat passengers.
- High voltage shutdown function shuts off the high voltage as needed upon a frontal collision, side collision, and rear-end collision in order to reduce the risk for the occupants, rescuer, and rescue team of the electrical hazard caused by high voltage electric leakage.
- For the inflator of all the air bag modules, the gas which is harmless to the human body has been adopted.
- The pre-tensioner is activated simultaneously with the deployment of driver's and front passenger's air bags in case of a frontal collision, and prevents the forward travel of the occupants when a collision occurs.

⚠ CAUTION

Do not disassemble the SRS air bag components or seat belt with pre-tensioner. Also, do not apply an impact.

*NOTE: *: SRS (Supplemental Restraint System)*

CONSTRUCTION DIAGRAM

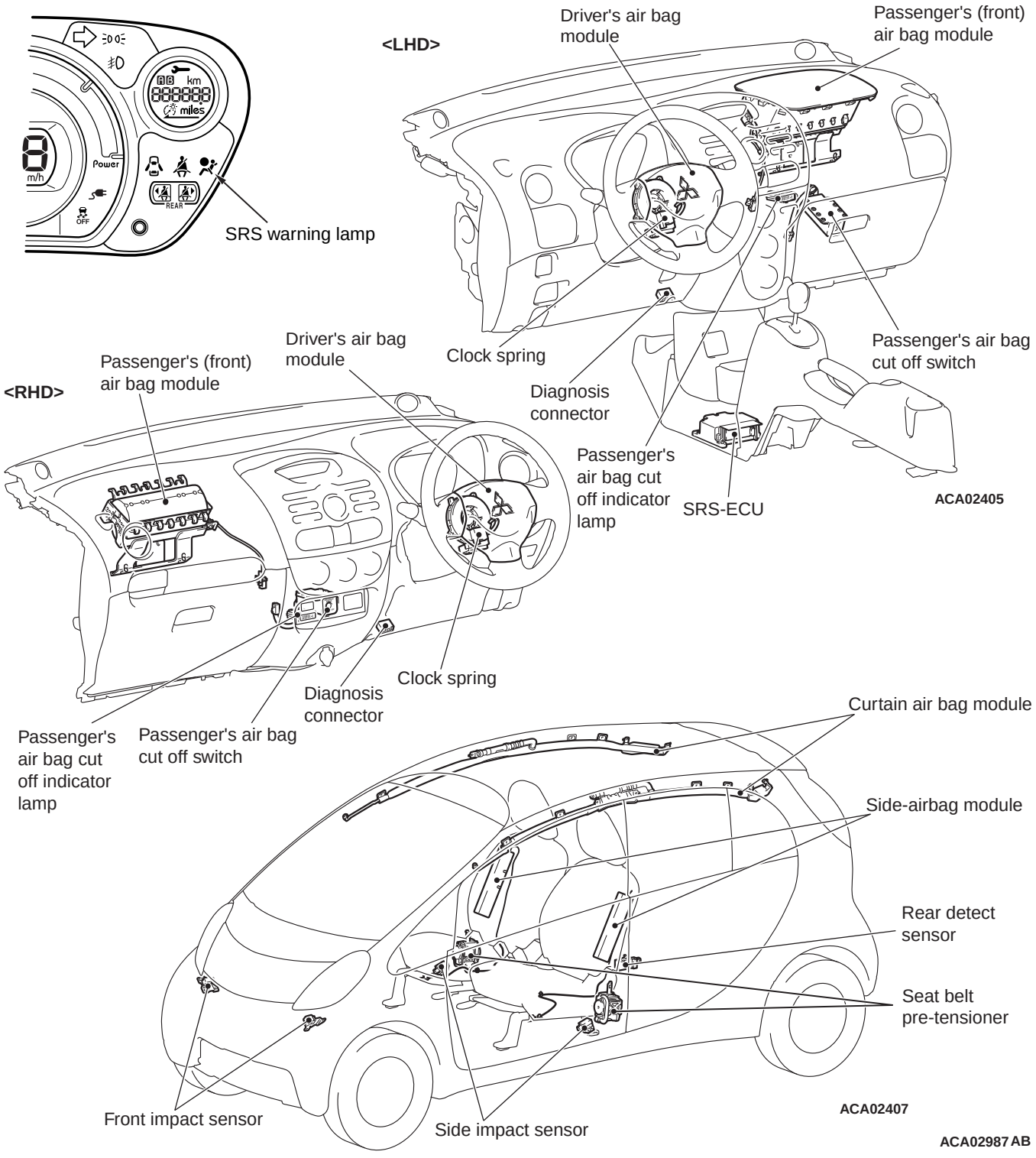

CAUTION LABELS

The labels indicating the precautions for handling and maintenance of SRS air bags and seat belt with pre-tensioner are adhered to the locations shown in the above figures.

Driver's air bag module

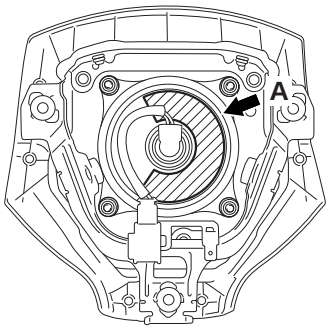

Passenger's (front) air bag module <LHD>

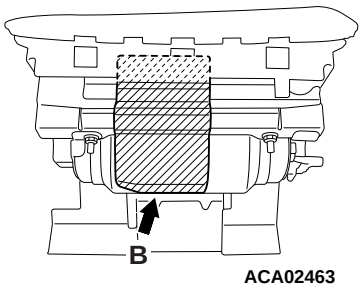

Passenger's (front) air bag module <RHD>

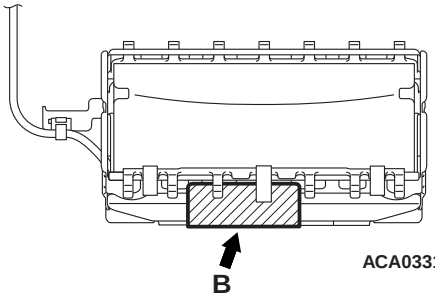

SRS-ECU

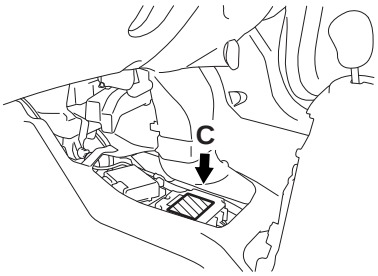

Sunvisor *

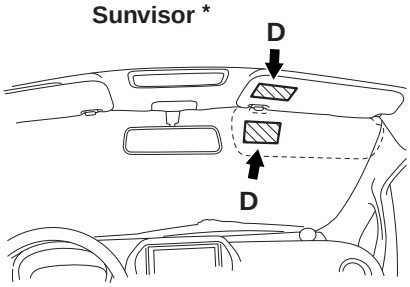

Seat belt pre-tensioner
<Driver's side> **<Passenger's side>**

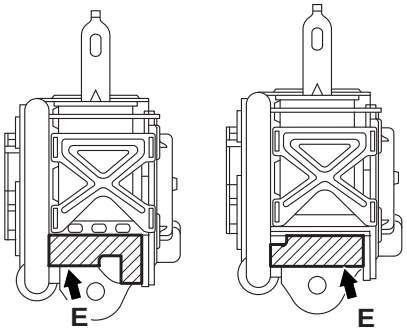

Side-airbag module (right and left)

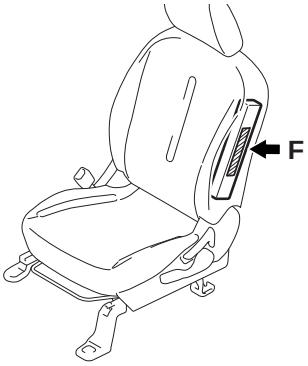

Curtain air bag module (right and left)

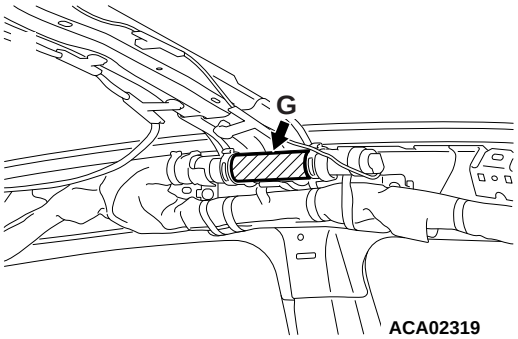

Instrument panel <RHD>

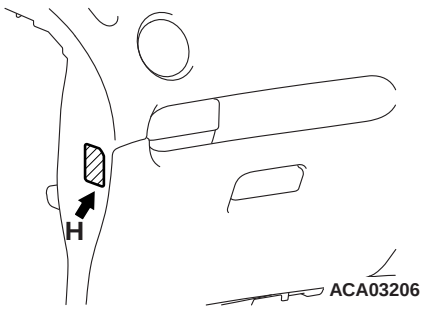

Glove box <LHD>

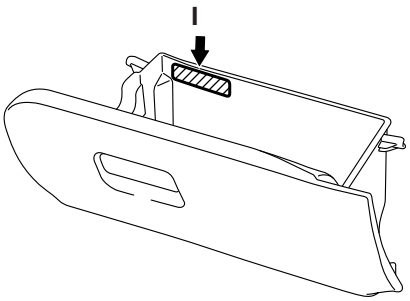

Passenger's air bag cut off switch

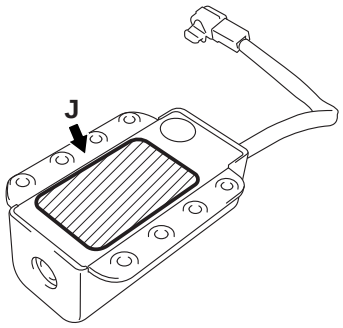

*NOTE: *: Indicates LHD vehicles. For RHD vehicles, the specified application position of label is symmetrical to this.*

Label content	
A	DANGER FLAMMABLE EXPLOSIVE DO NOT: DISASSEMBLE; HEAT; INCINERATE; APPLY ELECTRICITY; OR STORE AT HIGH TEMPERATURE (93°C or HIGHER). REFER TO WORKSHOP MANUAL FOR DETAILS.
B	WARNING FLAMMABLE EXPLOSIVE SRS AIR BAG MODULE TO AVOID SERIOUS INJURY: • DO NOT REPAIR, DISASSEMBLE OR TAMPER. • AVOID CONTACT WITH FLAME OR ELECTRICITY. • DO NO DIAGNOSIS/USE NO TEST EQPT OR PROBES. • STORE BELOW 200°F (93°C). • BEFORE DOING ANY WORK INVOLVING MODULE. READ SERVICE MANUAL FOR IMPORTANT FURTHER DATA.
C	CAUTION: DO NOT DISASSEMBLE OR DROP. IF DEFECT REFER TO SERVICE MANUAL.
D	WARNING • DEATH OR SERIOUS INJURY can occur. • DO NOT place rear-facing child seat on this seat with airbag.
E	SEAT BELT PRETENSIONER CAUTION THIS ASSEMBLY CONTAINS AN EXPLOSIVE INITIATOR. DANGER FLAMMABLE MATERIAL TO PREVENT PERSONAL INJURY • DO NOT REMOVE. INSTALL IT INTO ANOTHER VEHICLE. • SERVICE OR DISPOSE OF IT AS DIRECTED IN THE REPAIR MANUAL.
F, G	DANGER FLAMMABLE EXPLOSIVE DO NOT: DISASSEMBLE; HEAT; INCINERATE; APPLY ELECTRICITY; OR STORE AT HIGH TEMPERATURE (93°C or HIGHER). REFER TO WORKSHOP MANUAL FOR DETAILS.
H	 AC311947
I	 ACA02058 AB
J	CAUTION • Do Not Disassemble or Alter • See Owner’s Manual

SRS SYSTEM CIRCUIT DIAGRAM

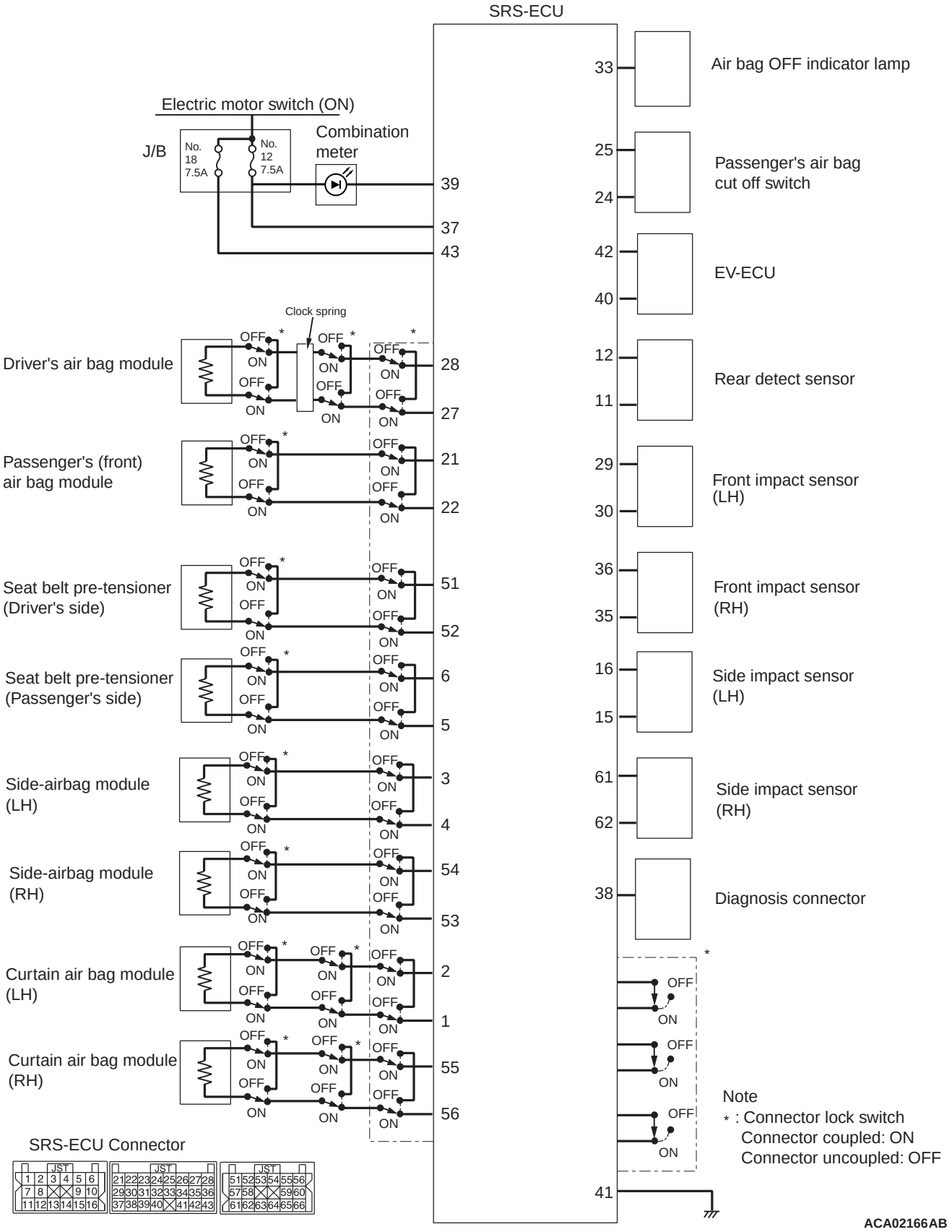

Number in system circuit diagram	Circuit name	Universal harness Wire diameter and colour
1	Left-side curtain air bag squib (+)	0.5Y
2	Left-side curtain air bag squib (-)	0.5Y-GR
3	Left-side side-airbag squib (+)	0.5Y-G
4	Left-side side-airbag squib (-)	0.5Y-R
5	Front passenger's seat belt pre-tensioner squib (-)	0.5R <LHD> 0.5W <RHD>
6	Front passenger's seat belt pre-tensioner squib (+)	0.5G <LHD> 0.5L <RHD>
11	Rear detect sensor (-)	0.5V
12	Rear detect sensor (+)	0.5LG
15	Left-side side impact sensor (-)	0.5R
16	Left-side side impact sensor (+)	0.5P
21	Passenger's (front) air bag squib (+)	0.5Y-G
22	Passenger's (front) air bag squib (-)	0.5Y-R
24	Passenger’s air bag cut off switch (-)	0.5BR
25	Passenger’s air bag cut off switch (+)	0.5LG
27	Driver's air bag squib (-)	0.5Y-B
28	Driver's air bag squib (+)	0.5Y
29	Left-side front impact sensor (+)	0.5GR
30	Left-side front impact sensor (-)	0.5LG
33	Passenger’s air bag OFF indicator lamp	0.5W
35	Right-side front impact sensor (-)	0.5V
36	Right-side front impact sensor (+)	0.5P
37	Electric motor switch power supply (fuse No. 15)	0.3SB
38	Diagnosis connector	0.3V
39	Combination neter	0.3G
40	EV-ECU (-)	0.3L
41	Earth	0.5B
42	EV-ECU (+)	0.3GR
43	Electric motor switch power supply (fuse No. 21)	0.5G <LHD> 0.5SB <RHD>
51	Driver's seat belt pre-tensioner squib (+)	0.5L <LHD> 0.5G <RHD>
52	Driver's seat belt pre-tensioner squib (-)	0.5W <LHD> 0.5R <RHD>
53	Right-side side-airbag squib (-)	0.5Y-B
54	Right-side side-airbag squib (+)	0.5Y
55	Right-side curtain air bag squib (+)	0.5Y-L
56	Right-side curtain air bag squib (-)	0.5Y-V
61	Right-side side impact sensor (-)	0.5L

Number in system circuit diagram	Circuit name	Universal harness Wire diameter and colour
62	Right-side side impact sensor (+)	0.5LG

NOTE: For how to read the harness wire diameter and wire colour, refer to the Electrical Wiring Diagram.

7.2. Fire extinguisher (X)2

M6169200000108

"Not Applicable"

7.3. Locks and anti-theft device

M6169300000086

"Not Applicable"

7.4. Warning triangle (if required) (X)2

M6169400000083

"Not Applicable"

7.5. First aid kit. (if required) (X)2

M6169500000080

"Not Applicable"

7.6. Wheel chocks (wedges) (if required) (X)2

M6169600000087

"Not Applicable"

7.7. Audible warning device

M6169700000084

"Not Applicable"

7.8. Speedometer

M6169800000081

"Not Applicable"

7.9. Tachograph (if fitted/required)

M6169900000088

"Not Applicable"

7.10. Speed limitation device (if fitted/required)

M6161100000088

"Not Applicable"

7.11 Odometer if available (X)2

M6160200000082

Visual Inspection

Check the odometer for displaying the total traveling distance of vehicle.

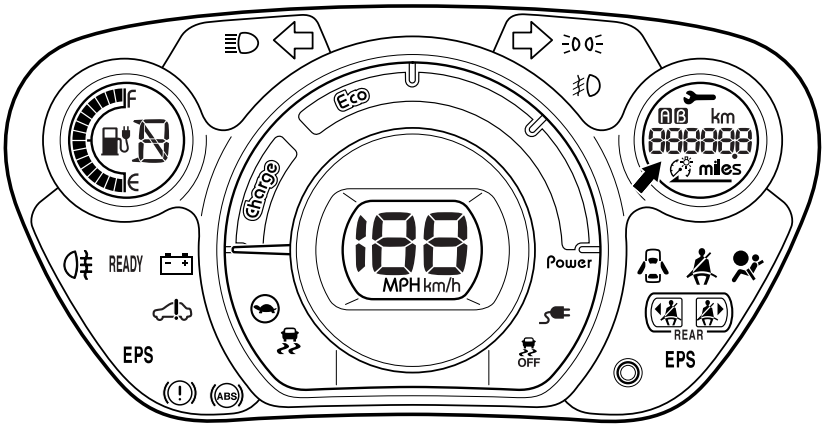

ACI02263 AB

7.12 Electronic Stability Control (ESC) if fitted/required

M6161200000085

ABS WARNING LAMP, ASC WARNING/ OPERATION LAMP AND BRAKE WARNING LAMP CHECK

Check that ABS and brake warning lamps, ASC warning/operation lamp illuminate as follows.

NOTE: The brake warning lamp is used as a warning lamp for parking brake, brake fluid level, brake electric vacuum pump system and EBD control.

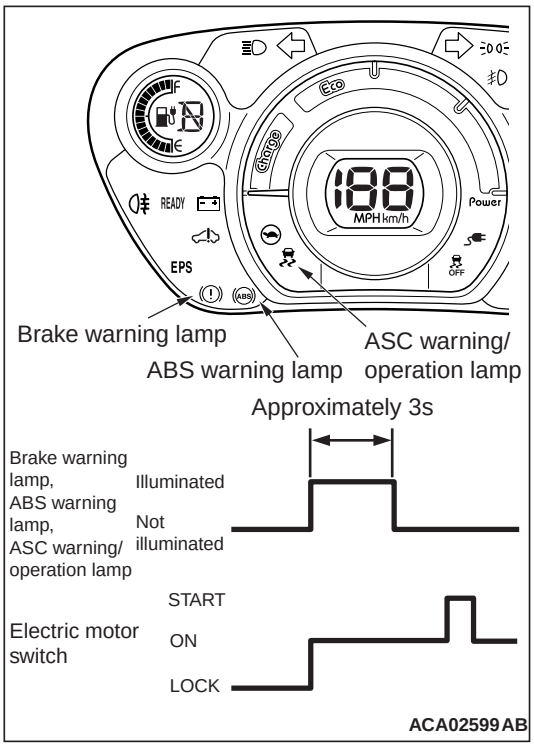

ACA02599 AB

1. When the electric motor switch is turned to the "ON" position, ABS and brake warning lamps, ASC warning/operation lamp illuminate.
2. The ABS and brake warning lamps, ASC warning/ operation lamp illuminate for three seconds[*1] and then turn "OFF"[*2].
3. Otherwise, check the diagnosis code.

NOTE:

- *[*1]: The ABS warning lamp may stay "ON" until the vehicle speed reaches 10 km/h. As far as ABS-ECU stores any diagnosis code related to the wheel speed sensor malfunction or the motor malfunction as past trouble, ABS-ECU continues illuminating the ABS warning lamp until it verifies that the malfunction for that code is resolved (startup check).*
- *[*2]: The brake warning lamp does not turn "OFF" when the parking brake is applied or the brake fluid level is lowered or the brake electric vacuum pump system is troubled.*

GROUP 8

NUISANCE

CONTENTS

8.1. NOISE 8-2
8.1.1 Noise suppression system 8-2

8.2. EXHAUST EMISSIONS. 8-2
8.2.1 Positive ignition engine emissions . . . 8-2
8.2.1.1 Exhaust emissions control equipment 8-2
8.2.1.2 Gaseous emissions. 8-2
8.2.2 Compression ignition engine emissions 8-2
8.2.2.1 Exhaust emission control equipment 8-2
8.2.2.2 Opacity 8-2

8.3. ELECTROMAGNETIC INTERFERENCE SUPPRESSION. 8-2

8.4. OTHER ITEMS RELATED TO THE ENVIRONMENT 8-2
8.4.1. Fluid leaks 8-2

8.1. Noise

8.1.1 Noise suppression system

M6170100100083

"Query raised for this content"

8.2. Exhaust emissions

8.2.1 Positive ignition engine emissions

8.2.1.1 Exhaust emissions control equipment

M6170200200128

"Not Applicable"

8.2.1.2 Gaseous emissions

M6170200300084

"Not Applicable"

8.2.2 Compression ignition engine emissions

8.2.2.1 Exhaust emission control equipment

M6170201100113

"Not Applicable"

8.2.2.2 Opacity

M6170201200080

"Not Applicable"

8.3. Electromagnetic interference suppression

M6170300000091

"Not Applicable"

8.4. Other items related to the environment

8.4.1. Fluid leaks

M6170400100084

"Not Applicable"

GROUP 9

SUPPLEMENTARY TESTS FOR PASSENGER-CARRYING VEHICLES CATEGORIES M2, M3

CONTENTS

9.1. DOORS 9-3
9.1.1. Entrance and exit doors 9-3
9.1.2. Emergency exits 9-3

9.2. DEMISTING AND DEFROSTING SYSTEM (X)2 9-3

9.3. VENTILATION & HEATING SYSTEM (X)2 9-3

9.4. SEATS. 9-3
9.4.1. Passenger seats (including seats for accompanying personnel) 9-3
9.4.2. Driver's seat (additional requirements) 9-3

9.5. INTERIOR LIGHTING AND DESTINATION DEVICES (X)2 9-3

9.6. GANGWAYS, STANDING AREAS 9-3

9.7. STAIRS AND STEPS. 9-3

9.8. PASSENGER COMMUNICATION SYSTEM (X)2 9-3

9.9. NOTICES (X)2 9-3

9.10. REQUIREMENTS REGARDING THE TRANSPORTATION OF CHILDREN. (X)2 9-4
9.10.1. Doors 9-4
9.10.2. Signalling and special equipment . . 9-4

9.11. REQUIREMENTS REGARDING THE TRANSPORTATION OF PERSONS WITH REDUCED MOBILITY (X)2. 9-4

9.11.1. Doors, ramps and lifts 9-4
9.11.2. Wheelchair restraint system 9-4
9.11.3. Signalling and special equipment . . 9-4

9.12. OTHER SPECIAL EQUIPMENT (X)2

. 9-4
9.12.1. Installations for food preparation . . . 9-4
9.12.2. Sanitary installation 9-4
9.12.3. Other devices (e.g. audio-visual systems) 9-4

9.1. Doors

9.1.1. Entrance and exit doors

M6180100100084

"Not Applicable"

9.1.2. Emergency exits

M6180100200081

"Not Applicable"

9.2. Demisting and defrosting system (X)2

M6180200000084

"Not Applicable"

9.3. Ventilation & heating system (X)2

M6180300000081

"Not Applicable"

9.4. Seats

9.4.1. Passenger seats (including seats for accompanying personnel)

M6180400100085

"Not Applicable"

9.4.2. Driver's seat (additional requirements)

M6180400200082

"Not Applicable"

9.5. Interior lighting and destination devices (X)2

M6180500000085

"Not Applicable"

9.6. Gangways, standing areas

M6180600000082

"Not Applicable"

9.7. Stairs and steps

M6180700000089

"Not Applicable"

9.8. Passenger communication system (X)2

M6180800000086

"Not Applicable"

9.9. Notices (X)2

M6180900000083

"Not Applicable"

9.10. Requirements regarding the transportation of children. (X)2

9.10.1. Doors

M6181000100080

"Not Applicable"

9.10.2. Signalling and special equipment

M6181000200087

"Not Applicable"

9.11. Requirements regarding the transportation of persons with reduced mobility (X)2

9.11.1. Doors, ramps and lifts

M6181100100087

"Not Applicable"

9.11.2. Wheelchair restraint system

M6181100200084

"Not Applicable"

9.11.3. Signalling and special equipment

M6181100300081

"Not Applicable"

9.12. Other special equipment (X)2

9.12.1. Installations for food preparation

M6181200100084

"Not Applicable"

9.12.2. Sanitary installation

M6181200200081

"Not Applicable"

9.12.3. Other devices (e.g. audio-visual systems)

M6181200300088

"Not Applicable"