SERVICE BULLETIN

MITSUBISHI MOTORS

DOMESTIC SALES & AFTER SALES SERVICE OFFICE, MITSUBISHI MOTORS CORPORATION

PURPOSE : INFORMATION	ISSUE NO. : MSB-10E00-009	DATE : 2010-07-05	
SUBJECT : INFORMATION ON 2011 OUTLANDER FOR BODY REPAIR MANUAL		<MODEL> (EUR/RUSSIA) OUTLANDER (CW0W)	<M/Y> 11
GROUP : GENERAL			

1. Description:

This Service Bulletin contains the information regarding the 2011 OUTLANDER.

2. Applicable Manual:

<EUR>

Manual	Pub. No.	Attached Sheet
2010 OUTLANDER Body Repair Manual	CGXE10E1-CD (English) CGXF10E1-CD (French) CGXG10E1-CD (Germany) CGXS10E1-CD (Spanish) CGXI10E1-CD (Italian)	Attached sheet

<RUSSIA>

Manual	Pub. No.	Attached Sheet
2010 OUTLANDER Body Repair Manual	N/A	Attached sheet

3. Details:

See Attached sheet.

6. BODY COLOUR

GENERAL INFORMATION

M4060000200829

OUTLINE OF CHANGE

- The section "BODY COLOUR CHARTS" has been established.
- The section "HOOD LOOK STAY" has been established.

BODY COLOUR CHARTS

M4060002003518

BODY COLOUR TABLE

Colour	Colour code	Colour number	Colour name	Coating film structure	Composition of film
SILVER	A31	CMA10031	Cool Silver Metallic	2M	Metallic
MEDIUM PURPLISH GREY	A39	CMA10039	Medium Purplish Grey Mica	2P	Metallic + Interferenced Pearl
DARK BLUE	D14	CMD10014	Cosmic Blue Mica	2P	Interferenced Pearl
GREYISH BROWN	C06	CMC10006	Quartz Brown Metallic	2M	Metallic
BLACK	X42	AC11342	Black Mica	2P	Interferenced Pearl
WHITE	W13	CMW10013	White Pearl	3P	Pearl
WHITE	W19	AC11319	White Solid	2S	Solid
RED	P26	CMP10026	Red Metallic	2M	Metallic

NOTE:

- *The coating film structure indicates top coating only (2S: 2 coat solid, 2M: 2 coat metallic, 2P: 2 coat pearl, 3P: 3 coat pearl).*
- *For painting, inner panel colours should be similar to the outer panel colours.*

BODY COLOURING

HOOD LOCK STAY

M4060001600013

(COLOUR CODE A31, W13, W19, P26)

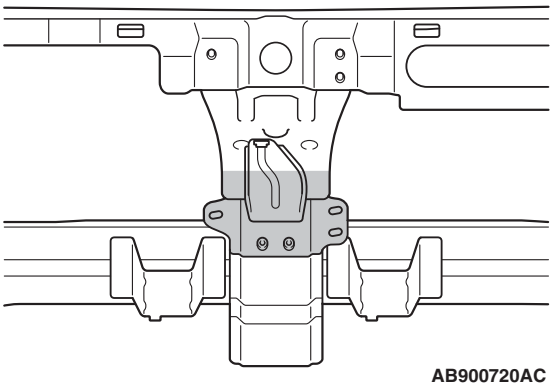

AB900720AC

NOTE: ▭ : Black (AC10657)