SERVICE BULLETIN

MITSUBISHI MOTORS

GLOBAL AFTER SALES OFFICE, MITSUBISHI MOTORS CORPORATION

PURPOSE : INFORMATION	ISSUE NO. : MSB-10E26-002	DATE : 2010-10-20
SUBJECT : FRONT DRIVE SHAFT NUT		<MODEL> <M/Y>
GROUP : FRONT AXLE		(EUR/RUSSIA) See following 2. Applicable Manuals table.

1. Description:

In order to improve productivity, the front drive shaft nuts have been changed to stake nuts and new service procedures have been established. This Service Bulletin contains the modified descriptions.

Details of change
- Front drive shaft (split pin hole at ends → **groove (keyway) in threads**)
- Front drive shaft nuts (castellated nuts → stake nuts)
- Tightening torque (144 to 176 N·m → 270 ± 27 N·m)

Current	New
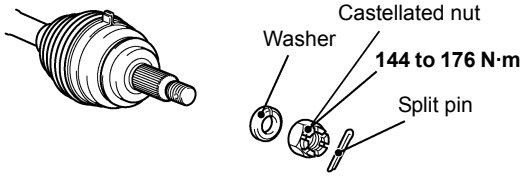	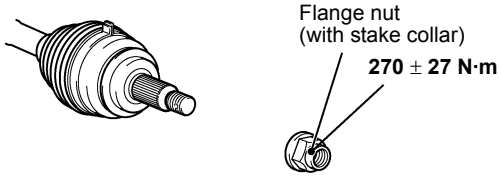

2. Applicable Manuals:

See Attached sheet 1.

There may be some attached sheets not included in this Service Bulletin because they are not applicable to your market. Their sheet numbers are not listed in the above table.

3. Effective Date:

4A92: From the beginning of October
4N1: From the middle of September
Others: From the end of September

4. Details:

See Attached sheets 4, 11 to 14 and 21.

Attached sheet 1

<EUR>

Manual/Model	<M/Y>	Pub. No.	Title (Info-ID)	Attached Sheet
2011 LANCER/ LANCER SPORTBACK Workshop Manual (CY0A/CX0A)	11	CG4E11E1-CD (English) CG4F11E1-CD (French) CG4G11E1-CD (German) CG4S11E1-CD (Spanish) CG4I11E1-CD (Italian)	Special Tools (M261-00-061-68000-01)	Attached sheet 4
			Front Axle Hub Assembly Removal and Installation (M261-00-171-30100-01)	Attached sheet 11, 21
			Driveshaft Assembly Removal and Installation (M261-00-352-15700-01)	Attached sheet 12, 21
2011 LANCER EVOLUTION Workshop Manual (CZ4A)	11	CGEE11E1-CD (English) CGEF11E1-CD (French) CGEG11E1-CD (German) CGES11E1-CD (Spanish) CGEI11E1-CD (Italian)	Special Tools (M261-00-061-40800-01)	Attached sheet 4
			Front Axle Hub Assembly Removal and Installation (M261-00-171-63500-01)	Attached sheet 13, 21
			Driveshaft Assembly Removal and Installation (M261-00-352-57400-01)	Attached sheet 14, 21

<RUSSIA>

Underneath Manual/ Model	<M/Y>	Underneath Pub. No.	Title (Info-ID)	Attached Sheet
2011 LANCER/ LANCER SPORTBACK Workshop Manual (CY0A/CX0A)	11	N/A	Special Tools (M261-00-061-68000-01)	Attached sheet 4
			Front Axle Hub Assembly Removal and Installation (M261-00-171-30100-01)	Attached sheet 11, 21
			Driveshaft Assembly Removal and Installation (M261-00-352-15700-01)	Attached sheet 12, 21
2011 LANCER EVOLUTION Workshop Manual (CZ4A)	11	N/A	Special Tools (M261-00-061-40800-01)	Attached sheet 4
			Front Axle Hub Assembly Removal and Installation (M261-00-171-63500-01)	Attached sheet 13, 21
			Driveshaft Assembly Removal and Installation (M261-00-352-57400-01)	Attached sheet 14, 21

<Added>

SPECIAL TOOL

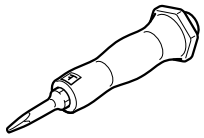 B992700	MB992700 Lock nut chisel	—	Raising up the swaged part driveshaft nut

REMOVAL AND INSTALLATION

CAUTION

- **The magnetic encoder collects metallic particles easily, because it is magnetized. Make sure that the magnetic encoder should not collect metallic particles. Check that there is not any trouble prior to reassembling it.**
- **When removing and installing the front wheel hub assembly, make sure that the magnetic encoder (integrated with the inner oil seal) does not contact with surrounding parts to avoid damage.**
- **When removing and installing the front wheel speed sensor, make sure that the sensor head at the end does not contact with surrounding parts to avoid damage.**
- **The parts indicated by * are the nuts with friction coefficient stabilizer. In removal, ensure there is no damage, clean dust and soiling from the bearing and thread surfaces, and tighten them to the specified torque.**

Post-installation operation
- Using your fingers, press the Ball Joint Dust Cover to check for a crack or damage.
- Check the beam direction of the headlamp (Low beam) (Refer to GROUP 54A – Headlamp Aiming).

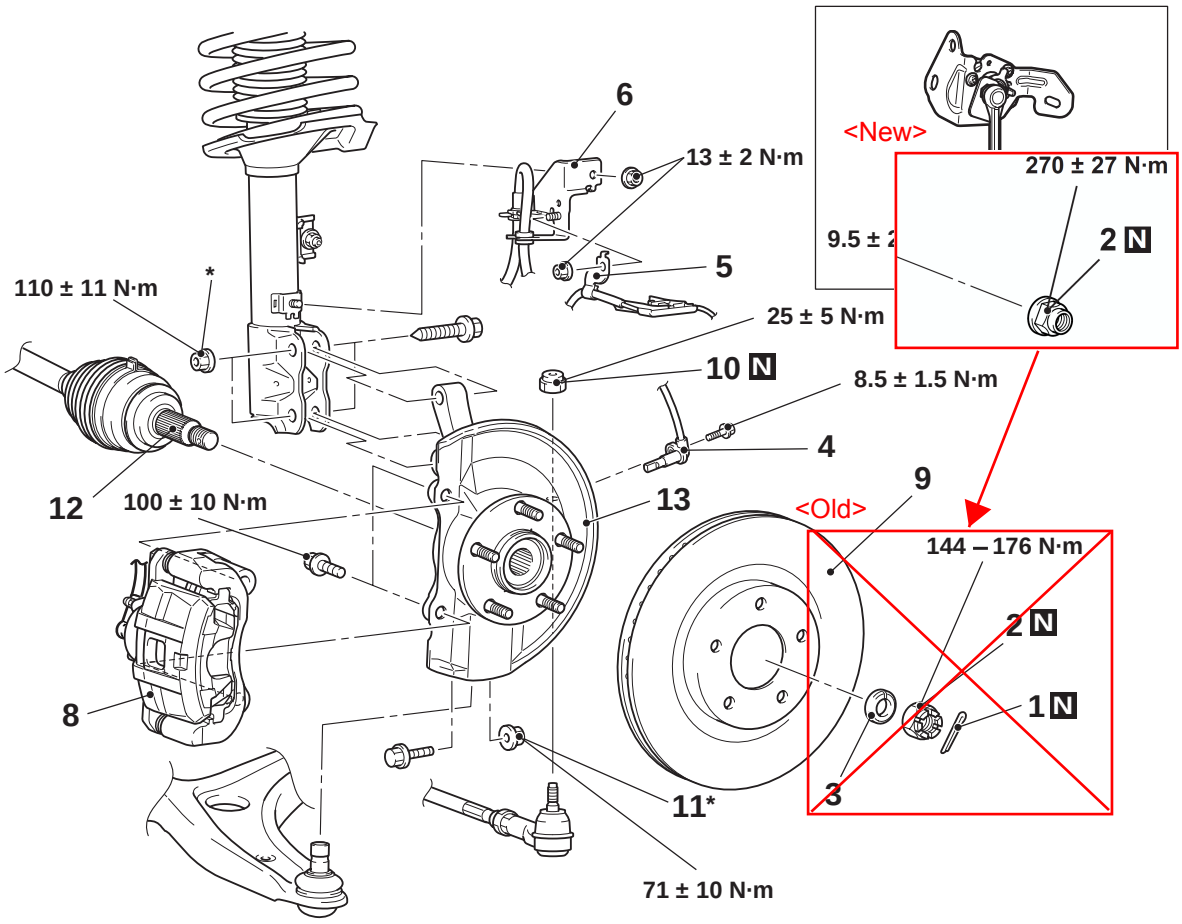

AC702020AC

Removal steps

<Deleted> ~~1. Split pin~~
<<A>> >>A<< 2. Driveshaft nut
<Deleted> >>A<< ~~3. Washer~~
4. Front wheel speed sensor (Refer to GROUP 35B – Wheel speed sensor)

Removal steps

5. Front wheel speed sensor harness clamp
6. Brake hose bracket
7. Front height sensor to lower arm connection <Vehicles with headlamp automatic levelling system>

Removal steps

<<B>> 8. Brake caliper assembly
9. Brake disc
<<C>> 10. Self-locking nut (tie-rod end connection)
11. Flange nut (lower arm ball joint connection)
<Added> <<D>> >>B<< 12. Driveshaft and hub knuckle assembly connection
13. Hub knuckle assembly

REMOVAL SERVICE POINTS

<Old>

<<A>> DRIVESHAFT NUT REMOVAL

CAUTION

Do not apply the vehicle weight on the front wheel hub assembly with the driveshaft nut loosened. Otherwise, the wheel bearing may be broken.

Use special tool front hub and flange yoke holder (MB990767) to counter the hub as shown in the figure to remove the driveshaft nut.

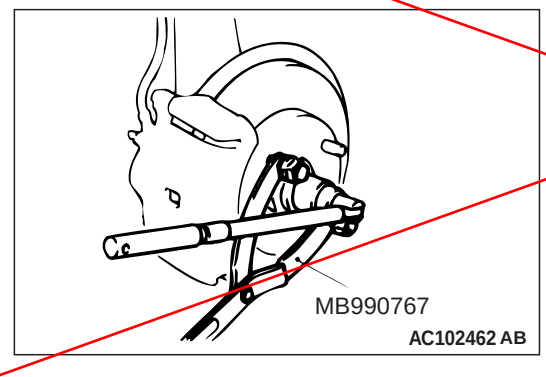

<<B>> BRAKE CALIPER ASSEMBLY REMOVAL

1. Remove the brake caliper assembly with brake hose.
2. Secure the removed brake caliper assembly with a wire or other similar material at a position where it will not interfere with the removal and installation of the hub knuckle assembly.

<New>

From attached sheet 21-①

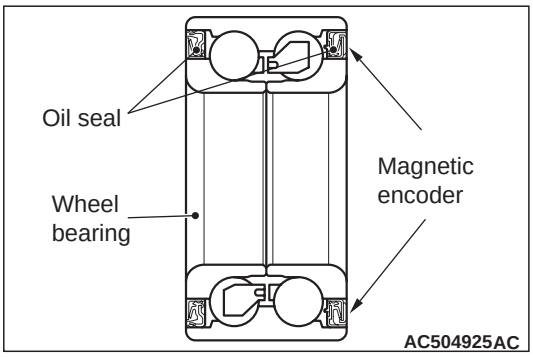

<<D>> DRIVESHAFT AND HUB KNUCKLE ASSEMBLY DISCONNECTION

CAUTION

- **The magnetic encoder collects metallic particles easily, because it is magnetized. Make sure that the magnetic encoder does not collect metallic particles.**
- **When removing the driveshaft, make sure that it does not contact with the magnetic encoder (integrated with the inner oil seal) to avoid damage.**

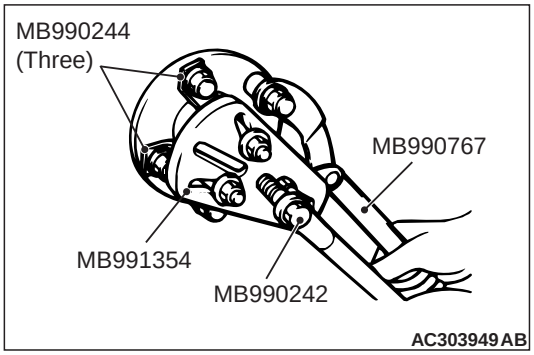

If the driveshaft is seized, use the following special tools to push the driveshaft out from the hub:

- Puller shaft (MB990242)
- Puller bar (MB990244)
- Front hub and flange yoke holder (MB990767)
- Puller body (MB991354)

<Added> From attached sheet 21-②

INSTALLATION SERVICE POINTS

<Deleted> **>>A<< ~~WASHER~~/DRIVESHAFT NUT INSTALLATION**

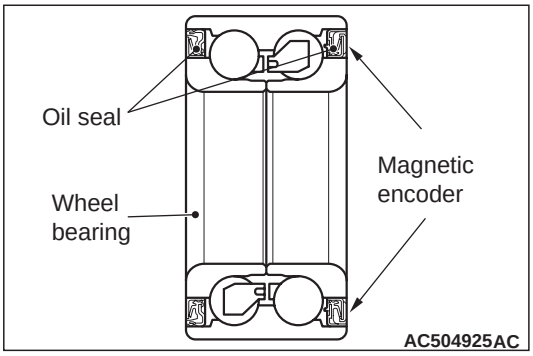

CAUTION

- **The magnetic encoder collects metallic particles easily, because it is magnetized. Make sure that the magnetic encoder should not collect metallic particles. Check that there is not any trouble prior to reassembling it.**
- **When installing the driveshaft, make sure that it does not contact with the magnetic encoder (integrated with the inner oil seal) to avoid damage.**
- **Do not apply the vehicle weight on the wheel bearing before fully tightening the driveshaft nut. Otherwise, the wheel bearing may be broken.**

<Old>

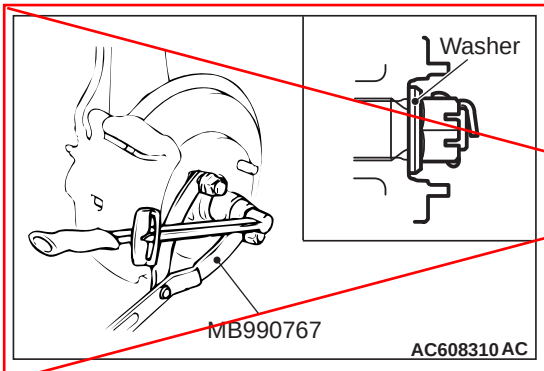

1. Be sure to install the driveshaft washer in the illustrated direction.
2. Using special tool front hub and flange yoke holder (MB990767), tighten the driveshaft nut. At this time, tighten the nut to the specified lower limit torque so that the pin hole may align with split pin.

   Tightening torque: 144 – 176 N·m
3. If the pin hole does not align with the pin, tighten the driveshaft nut (less than 176 N·m) and find the nearest hole, then fit the split pin.

<New> From attached sheet 21-③

<Except RALLIART>

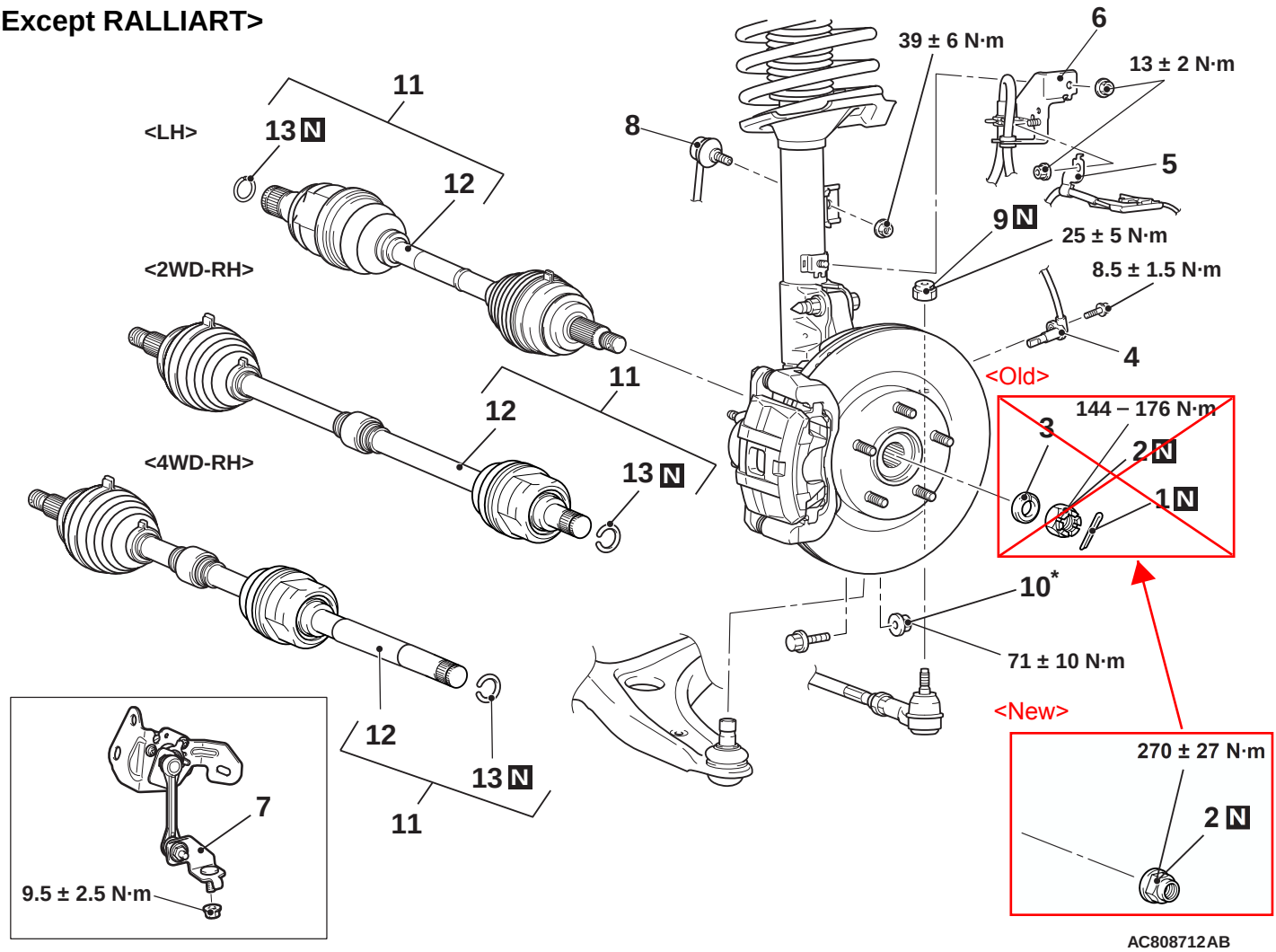

Removal steps

<Deleted> ~~1. Split pin~~
<<A>> >>C<< 2. Driveshaft nut
<Deleted> >>C<< ~~3. Washer~~
4. Front wheel speed sensor (Refer to GROUP 35B, Wheel speed sensor removal and installation)
5. Front wheel speed sensor harness clamp
6. Brake hose bracket

Removal steps

7. Front height sensor to lower arm connection <Vehicles with headlamp automatic levelling system>
<<B>> >>B<< 8. Stabilizer link connection
<<C>> 9. Self-locking nut (tie-rod end connection)
10. Flange nut (lower arm ball joint connection)
<<D>> >>A<< 11. Driveshaft assembly
12. Driveshaft
13. Circlip

<RALLIART>

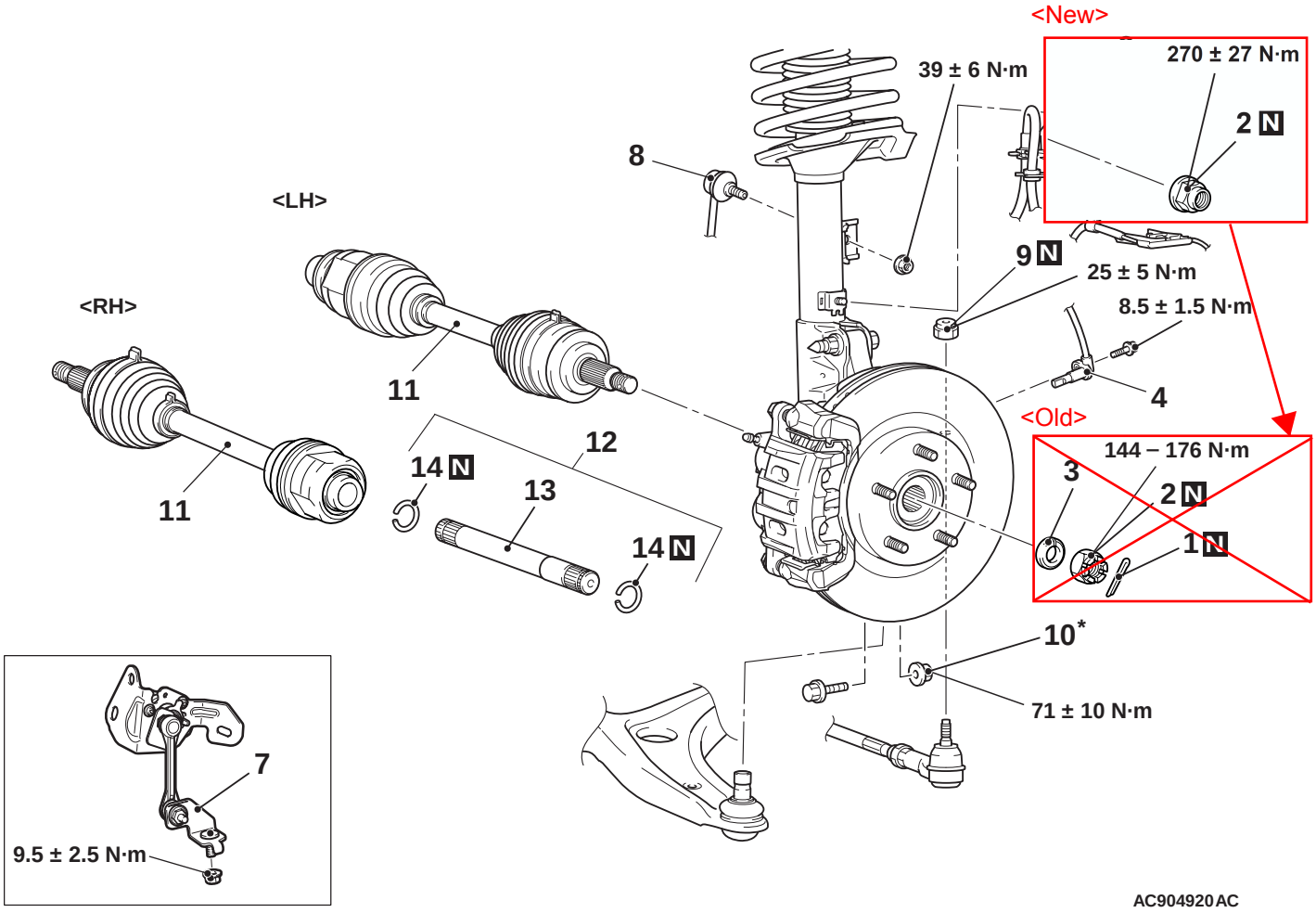

Removal steps

- <Deleted> 1. ~~Split pin~~
- <<A>> >>C<< 2. Driveshaft nut
- <Deleted> >>C<< 3. ~~Washer~~
- 4. Front wheel speed sensor (Refer to GROUP 35B, Wheel speed sensor removal and installation)
- 5. Front wheel speed sensor harness clamp
- 6. Brake hose bracket
- 7. Front height sensor to lower arm connection <Vehicles with headlamp automatic levelling system>
- <<B>> >>B<< 8. Stabilizer link connection
- <<C>> 9. Self-locking nut (tie-rod end connection)
- 10. Flange nut (lower arm ball joint connection)
- <<D>> >>A<< 11. Driveshaft assembly
- <<E>> >>A<< 12. Output shaft assembly (RH)
- 13. Output shaft (RH)
- 14. Circlip

REMOVAL SERVICE POINTS

<Old>

<<A>> DRIVESHAFT NUT REMOVAL

CAUTION

Do not apply the vehicle weight on the wheel bearing with the driveshaft nut loosened. Otherwise, the wheel bearing may be broken.

Use special tool front hub and flange yoke holder (MB990767) to counter the hub as shown in the figure to remove the driveshaft nut.

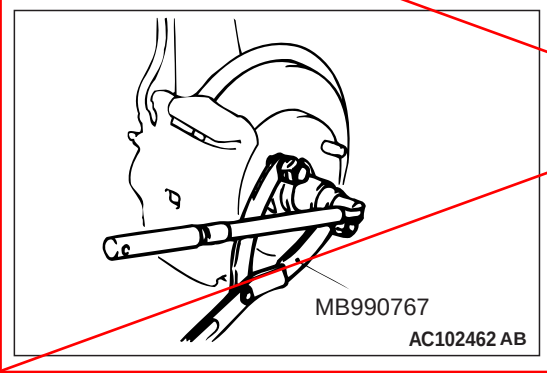

<<B>> STABILIZER LINK DISCONNECTION

Use a hexagon wrench to remove the stabilizer link and strut connection nut as shown in the figure.

<New>

From attached sheet 21-①

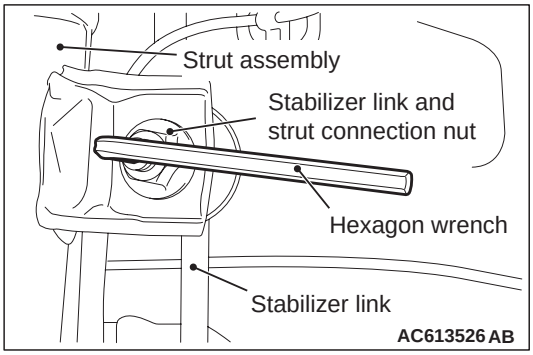

<<C>> SELF-LOCKING NUT (TIE-ROD END CONNECTION) REMOVAL

CAUTION

- **Loosen the self-locking nut (tie-rod end connection) from the ball joint, but do not remove here. Use the special tool.**
- **To prevent the special tool from dropping off, suspend it with a cord.**

1. Install special tool ball joint remover (MB991897 or MB992011) as shown in the figure.

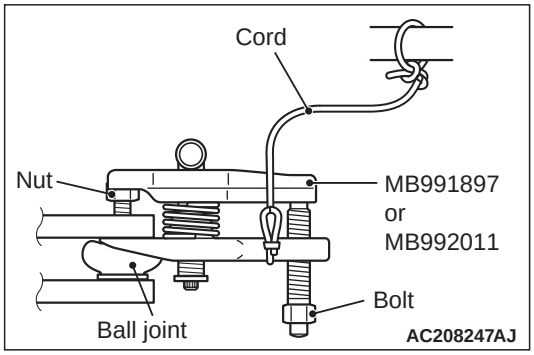

ASSEMBLY INSTALLATION

CAUTION

- **The magnetic encoder collects metallic particles easily, because it is magnetised. Make sure that the magnetic encoder should not collect metallic particles. Check that there is not any trouble prior to reassembling it.**
- **When installing the driveshaft, make sure that it does not contact with the magnetic encoder (integrated with the inner oil seal) to avoid damage.**
- **Care must be taken to ensure that the oil seal of the transmission is not damaged by the spline part of the output shaft assembly or driveshaft assembly.**

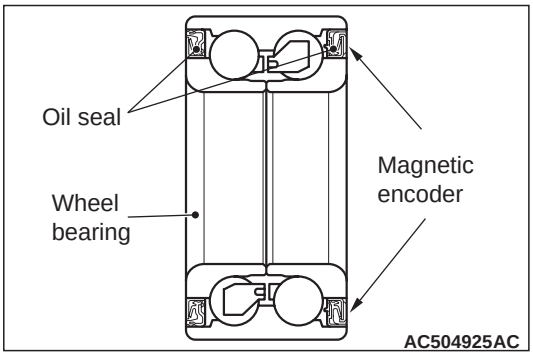

<Added>

• Insert the driveshaft so that no hub bolt is vertically above the groove of the front drivehshaft assembly.

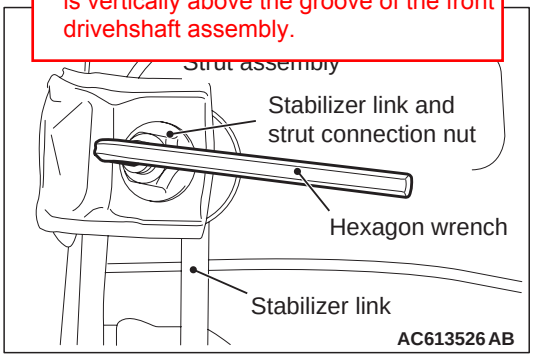

>>B<< STABILIZER LINK CONNECTION

Use a hexagon wrench to install the stabilizer link and strut connection nut as shown in the figure.

<Deleted>

>>C<< ~~WASHER~~/DRIVESHAFT NUT INSTALLATION

CAUTION

Do not apply the vehicle weight on the front wheel hub assembly before fully tightening the driveshaft nut. Otherwise, the wheel bearing may be broken.

<Old>

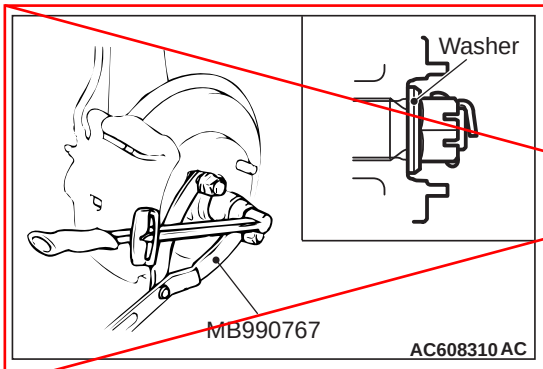

1. Incorporate the driveshaft assembly washer as shown in the illustration.
2. Using special tool front hub and flange yoke holder (MB990767), tighten the driveshaft nut. At this time, tighten the nut to the specified lower limit torque so that the pin hole may align with split pin.

   Tightening torque: 144 – 176 N·m
3. If the pin hole does not align with the pin, tighten the driveshaft nut (less than 176 N·m) and find the nearest hole, then fit the split pin.

<New>

From attached sheet 21-③

REMOVAL AND INSTALLATION

CAUTION

- **The magnetic encoder collects metallic particles easily, because it is magnetized. Make sure that the magnetic encoder should not collect metallic particles. Check that there is not any trouble prior to reassembling it.**
- **When removing and installing the front wheel hub assembly, make sure that the magnetic encoder (integrated with the inner oil seal) does not contact with surrounding parts to avoid damage.**
- **When removing and installing the front wheel speed sensor, make sure that the sensor head at the end does not contact with surrounding parts to avoid damage.**
- **During maintenance, take care not to contact the parts or tools to the caliper because the paint of caliper will be scratched. And if there is brake fluid on the caliper, wipe off quickly.**
- **The parts indicated by * are the bolt and nuts with friction coefficient stabilizer. In removal, ensure there is no damage, clean dust and soiling from the bearing and thread surfaces, and tighten them to the specified torque.**

Post-installation operation
- Using your fingers, press the Ball Joint Dust Cover to check for a crack or damage.
- Check the beam direction of the headlamp (Low beam) (Refer to GROUP 54A – Headlamp Aiming).

<Vehicles with 15 inch brake>

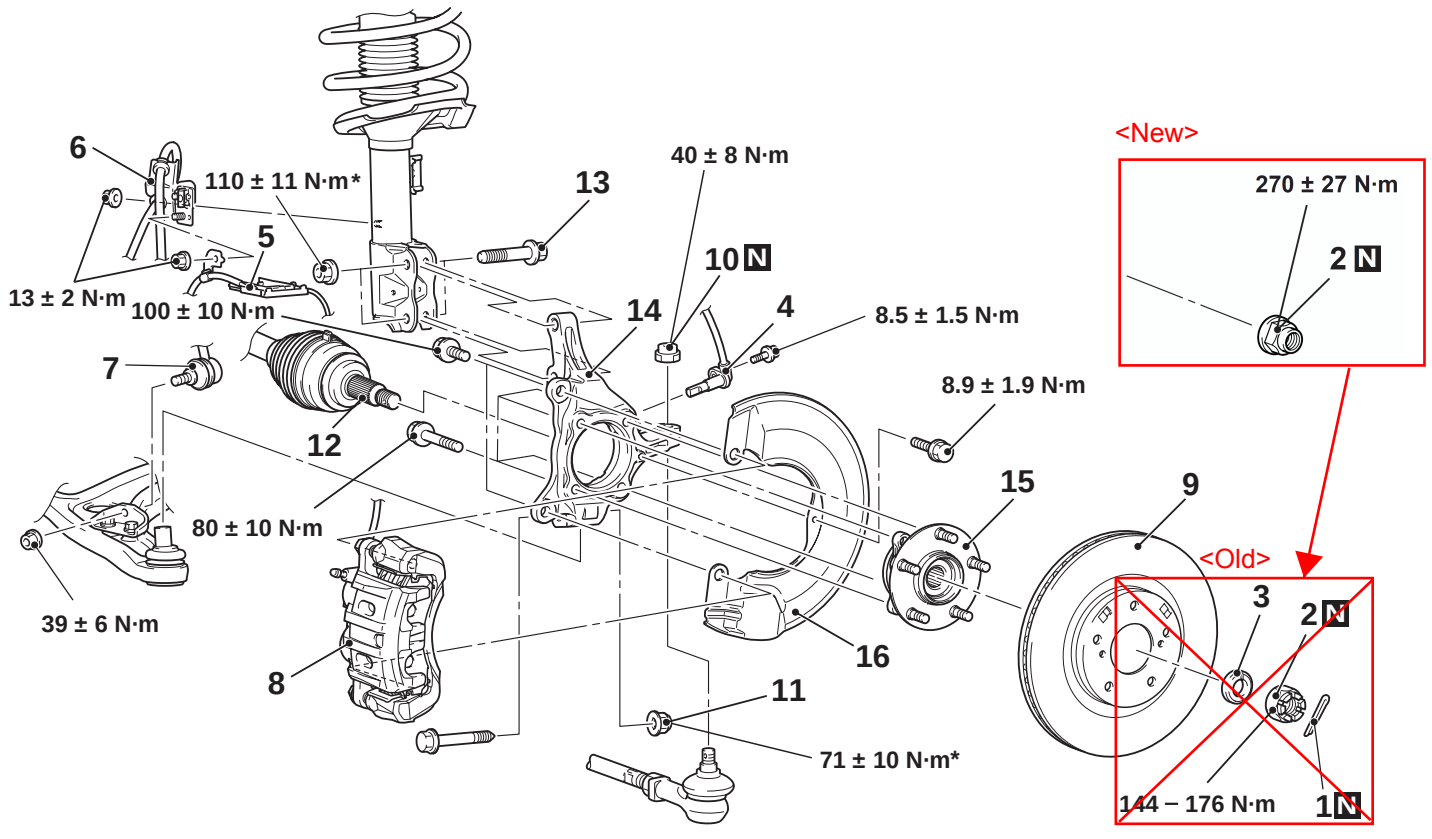

AC704843AB

Removal steps

<Deleted> ~~1. Split pin~~

<<A>> >>B<< 2. Front driveshaft nut

Removal steps

<Deleted> >>B<< ~~3. Washer~~

4. Front wheel speed sensor

Removal steps

5. Front wheel speed sensor harness clip
6. Brake hose bracket
7. Front stabilizer link and lower arm connection

<<B>> 8. Front caliper assembly

<<C>> 9. Front brake disk

<<D>> 10. Self locking nut (tie-rod end connection)

<Added> 11. Nut (lower arm ball joint connection)

<<E>> >>C<< 12. Front hub assembly and front driveshaft assembly connection

>>A<< 13. Knuckle and strut assembly connection bolt

14. Knuckle
15. Front hub assembly
16. Dust shield

<Vehicles with 18 inch brake>

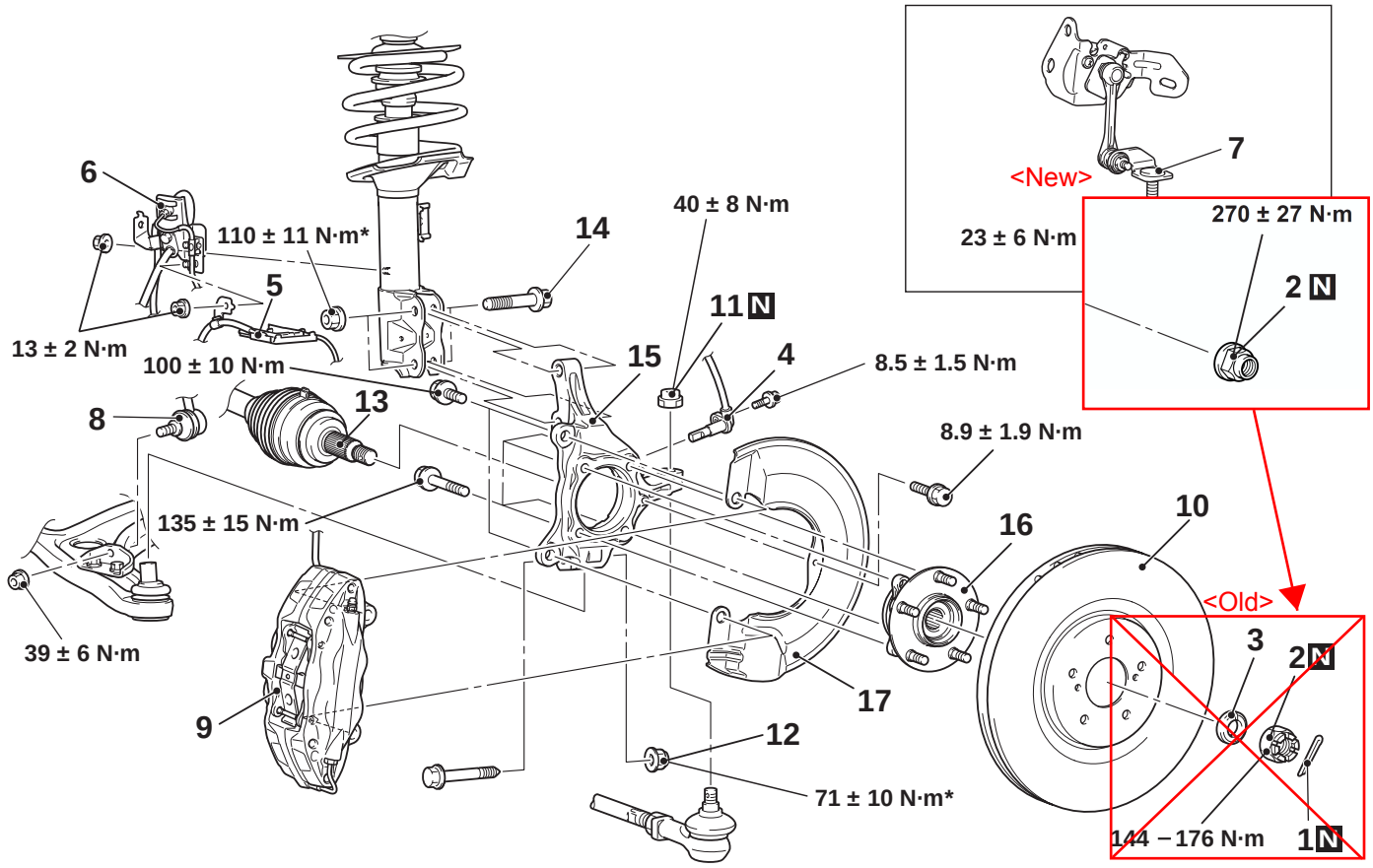

AC704844AB

Removal steps

<Deleted> ~~1. Split pin~~

<<A>> >>B<< 2. Front driveshaft nut

<Deleted> ~~>>B<< 3. Washer~~

4. Front wheel speed sensor
5. Front wheel speed sensor harness clip

Removal steps

6. Brake hose bracket
7. Front height sensor to lower arm connection
8. Front stabilizer link and lower arm connection

<<B>> 9. Front caliper assembly

<<C>> 10. Front brake disk

Removal steps

<<D>> 11. Self locking nut (tie-rod end connection)
12. Nut (lower arm ball joint connection)
<Added>
<<E>> >>C<< 13. Front hub assembly and front driveshaft assembly connection
>>A<< 14. Knuckle and strut assembly connection bolt
15. Knuckle
16. Front hub assembly
17. Dust shield

REMOVAL SERVICE POINTS

<Old>

<<A>> FRONT DRIVESHAFT NUT REMOVAL

CAUTION

Do not apply the vehicle weight on the front wheel hub assembly with the driveshaft nut loosened. Otherwise, the wheel bearing may be broken.

Use special tool front hub and flange yoke holder (MB990767) to counter the hub as shown in the figure to remove the driveshaft nut.

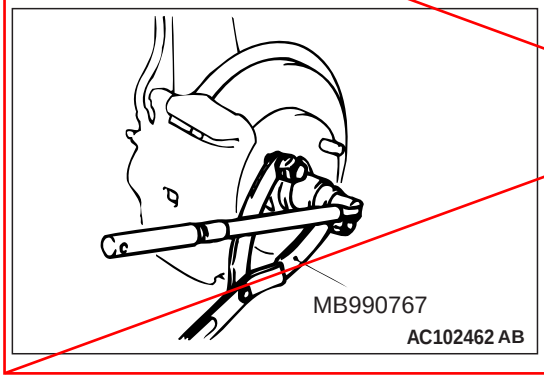

<New>

From attached sheet 21-①

<<B>> FRONT CALIPER ASSEMBLY REMOVAL

1. Remove the caliper assembly with brake hose.
2. Secure the removed caliper assembly with a wire or other similar material at a position where it will not interfere with the removal and installation of the hub knuckle assembly.

<<C>> FRONT BRAKE DISK REMOVAL

If the front brake disk removal is difficult, install bolts (M8 x 1.25) shown in the figure, and tighten them evenly and gradually to remove the front brake disk.

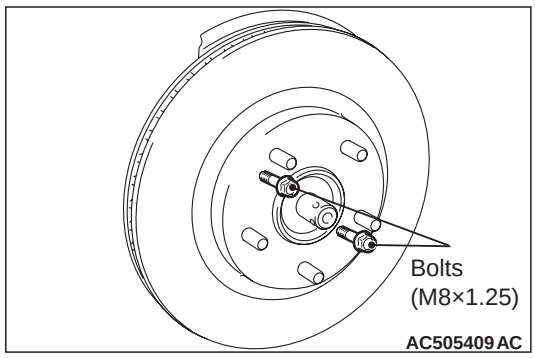

<<E>> FRONT HUB ASSEMBLY AND FRONT DRIVESHAFT ASSEMBLY DISCONNECTION

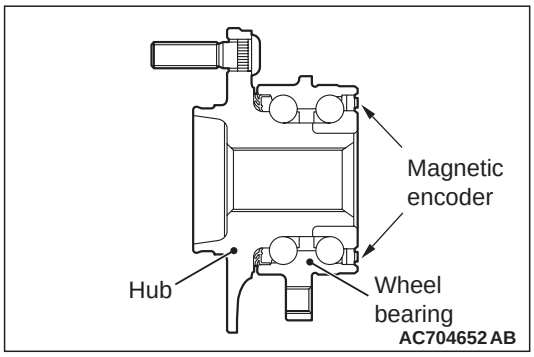

⚠ CAUTION

- **The magnetic encoder collects metallic particles easily, because it is magnetized. Make sure that the magnetic encoder does not collect metallic particles.**
- **When removing the front driveshaft, make sure that it does not contact with the magnetic encoder (integrated with the inner oil seal) to avoid damage.**

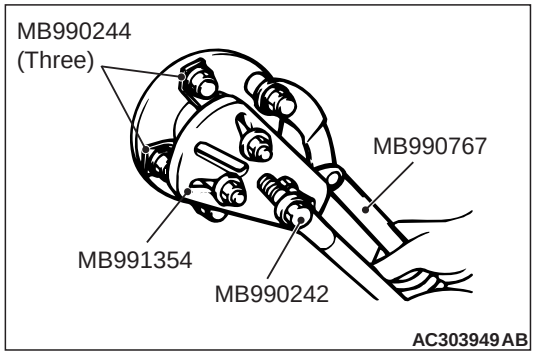

If the front driveshaft and front hub are seized, use the following special tools to push the front driveshaft assembly out from the front hub.

- Puller shaft (MB990242)
- Puller bar (MB990244)
- Front hub and flange yoke holder (MB990767)
- Puller body (MB991354)

INSTALLATION SERVICE POINTS

>>A<< KNUCKLE AND STRUT ASSEMBLY CONNECTION BOLT INSTALLATION

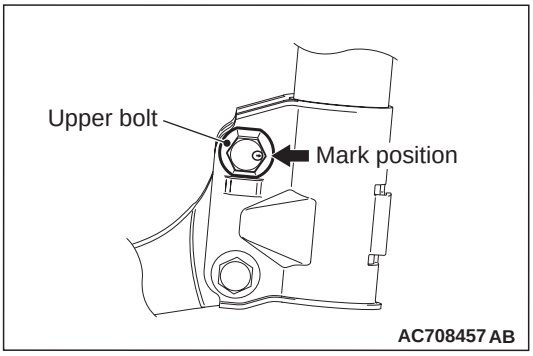

Locate the knuckle and strut assembly upper connection bolt's marking position as shown in the figure and tighten it.

<Added>

From attached sheet 21-④

<Deleted>
>>B<< ~~WASHER~~/FRONT DRIVESHAFT NUT INSTALLATION

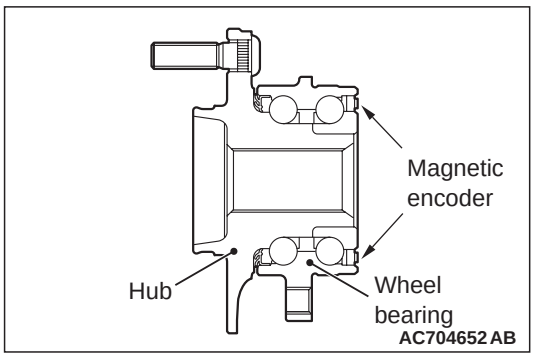

CAUTION

- **The magnetic encoder collects metallic particles easily, because it is magnetized. Make sure that the magnetic encoder should not collect metallic particles. Check that there is not any trouble prior to reassembling it.**
- **When installing the front driveshaft, make sure that it does not contact with the magnetic encoder (integrated with the inner oil seal) to avoid damage.**
- **Do not apply the vehicle weight on the wheel bearing before fully tightening the front driveshaft nut. Otherwise, the wheel bearing may be broken.**

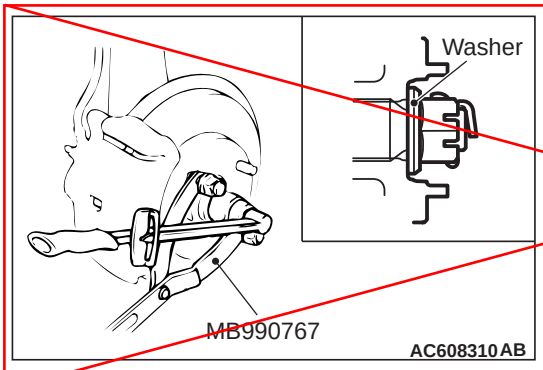

1. Be sure to install the front driveshaft washer in the illustrated direction.
2. Using special tool front hub and flange yoke holder (MB990767), tighten the driveshaft nut. At this time, tighten the nut to the specified lower limit torque so that the pin hole may align with split pin.

   Tightening torque: 144 – 176 N·m
3. If the pin hole does not align with the pin, tighten the driveshaft nut (less than 176 N·m) and find the nearest hole, then fit the split pin.

<Old>

<New>
From attached sheet 21-③

REMOVAL AND INSTALLATION

⚠ CAUTION

- **The magnetic encoder collects metallic particles easily, because it is magnetized. Make sure that the magnetic encoder should not collect metallic particles. Check that there is not any trouble prior to reassembling it.**
- **When removing and installing the front driveshaft assembly, make sure that the magnetic encoder (integrated with the inner oil seal) does not contact with surrounding parts to avoid damage.**
- **When removing and installing the front wheel speed sensor, make sure that the pole piece at the end does not contact with surrounding parts to avoid damage.**
- **The part indicated by* is the nut with friction coefficient stabilizer. In removal, ensure there is no damage, clean dust and soiling from the bearing and thread surfaces, and tighten them to the specified torque.**

Pre-removal operation	Post-installation operation
• Transmission Oil Draining (Refer to GROUP 22A, On-vehicle Service, Transmission Oil Change.) • Engine Room Under Cover Front Removal (Refer to GROUP51, Under Cover.)	• Using your fingers, press the Ball Joint Dust Cover to check for a crack or damage. • Transmission Oil Filling (Refer to GROUP 22A, On-vehicle Service, Transmission Oil Change.) • Check the beam direction of the headlamp (Low beam) (Refer to GROUP 54A – Headlamp Aiming). • Engine Room Under Cover Front Installation (Refer to GROUP51, Under Cover.)

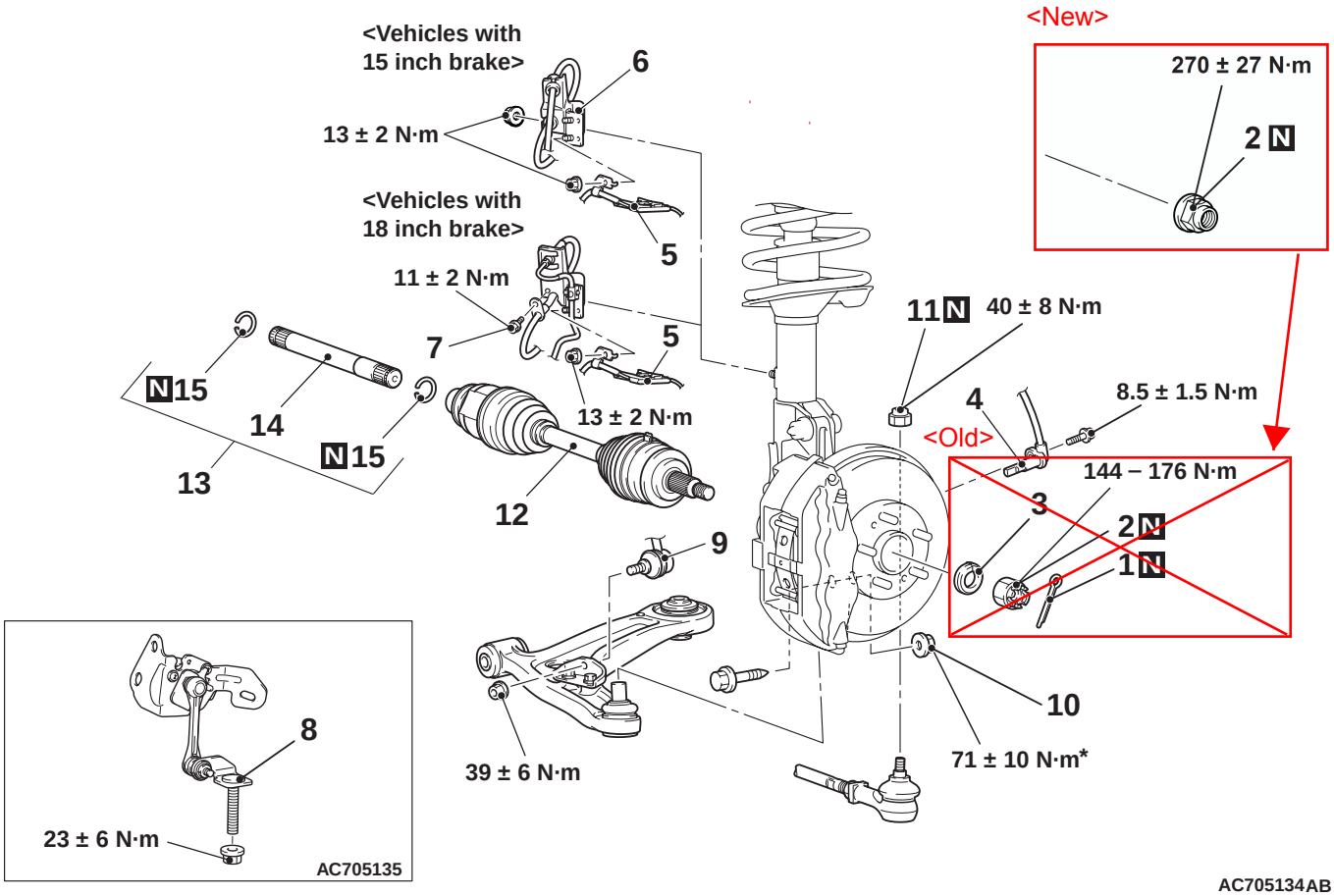

Removal steps

<Deleted> ~~1. Split pin~~
<<A>> >>B<< 2. Front driveshaft nut
<Deleted> ~~>>B<< 3. Washer~~

Removal steps

4. Front wheel speed sensor
5. Front wheel speed sensor harness clip

Removal steps

6. Brake hose bracket <Vehicles with 15 inch brake>
7. Brake hose fixing bolt <Vehicles with 18 inch brake>
8. Front height sensor to lower arm connection <Vehicles with headlamp automatic levelling system>
9. Front stabilizer link and lower arm connection
10. Nut (lower arm ball joint connection)
11. Self locking nut (tie-rod end connection)
12. Front driveshaft assembly
13. Output shaft assembly
14. Output shaft
15. Circlip

<<B>>
<<C>> >>A<<
<<D>> >>A<<

REMOVAL SERVICE POINTS

<Old>

<<A>> FRONT DRIVESHAFT NUT REMOVAL

⚠ CAUTION

Do not apply the vehicle weight on the front wheel hub assembly with the driveshaft nut loosened. Otherwise, the wheel bearing may be broken.

Use special tool front hub and flange yoke holder (MB990767) to counter the hub as shown in the figure to remove the front driveshaft nut.

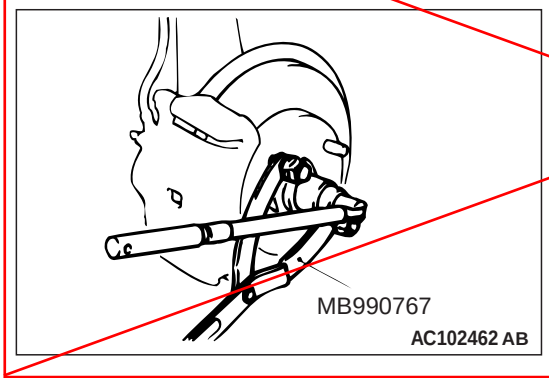

<New>

From attached sheet 21-①

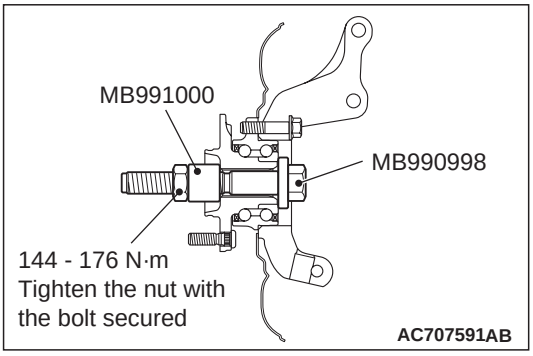

⚠ CAUTION

Do not apply the vehicle weight to the wheel bearing with the front driveshaft assembly removed. If, however, the vehicle weight shall be applied to the bearing (in order to move the vehicle), tighten the following special tools to the specified torque 144 – 176 N·m.

- **Spacer (MB991000)**
- **Front hub remover and installer (MB990998)**

<<D>>OUTPUT SHAFT ASSEMBLY REMOVAL

⚠ CAUTION

When pulling the output shaft out from the transmission, be careful that the spline part of the output shaft does not damage the oil seal.

Use special tool slide hammer (MB991721) to remove the output shaft assembly.

NOTE: The output shaft assembly (LH) for vehicles with TC-SST cannot be removed from the transmission.

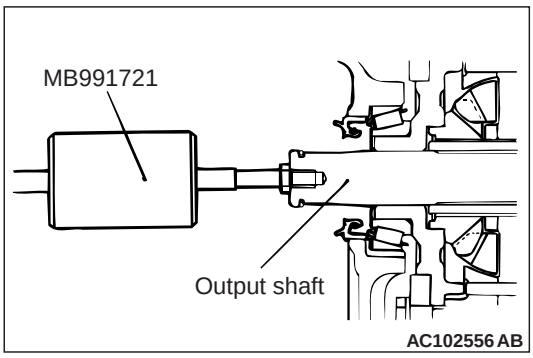

INSTALLATION SERVICE POINTS

>>A<< OUTPUT SHAFT ASSEMBLY/FRONT DRIVESHAFT ASSEMBLY INSTALLATION

⚠ CAUTION

- **The magnetic encoder collects metallic particles easily, because it is magnetized. Make sure that the magnetic encoder should not collect metallic particles. Check that there is not any trouble prior to reassembling it.**
- **When installing the front driveshaft, make sure that it does not contact with the magnetic encoder (integrated with the inner oil seal) to avoid damage.**
- **Care must be taken to ensure that the oil seal of the transmission is not damaged by the spline part of the output shaft assembly or front driveshaft assembly.**

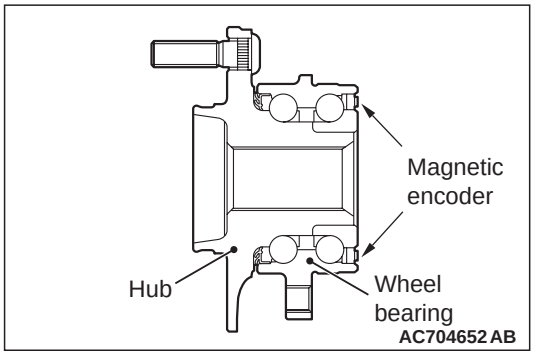

<Added>

・Insert the driveshaft so that no hub bolt is vertically above the groove of the front drivehshaft assembly.

<Deleted>
>>B<< ~~WASHER~~/FRONT DRIVESHAFT NUT INSTALLATION

CAUTION
Do not apply the vehicle weight on the front wheel hub assembly before fully tightening the front driveshaft nut. Otherwise, the wheel bearing may be broken.

<Old>

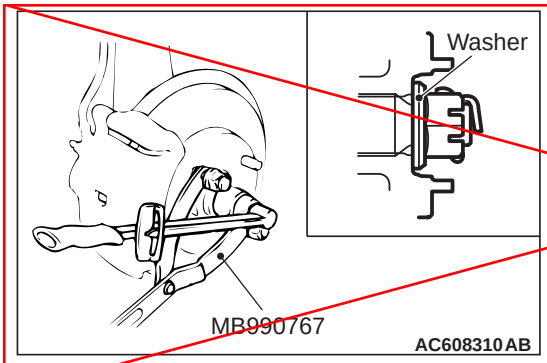

1. Be sure to install the front driveshaft washer in the illustrated direction.
2. Using special tool front hub and flange yoke holder (MB990767), tighten the driveshaft nut. At this time, tighten the nut to the specified lower limit torque so that the pin hole may align with split pin.
   Tightening torque: 144 – 176 N·m
3. If the pin hole does not align with the pin, tighten the driveshaft nut (less than 176 N·m) and find the nearest hole, then fit the split pin.

<New>
From attached sheet 21-③

①

1. The staked portion of the driveshaft nut must face upwards.

⚠ CAUTION

- **Make sure that the lock nut chisel is set in the correct direction. Otherwise, the groove or thread in the front driveshaft may be broken, or the tip of the chisel may be chipped.**
- **Never use a chisel which tip is damaged.**
- **For how to use the lock nut chisel, refer to the manufacturer's operating instructions.**

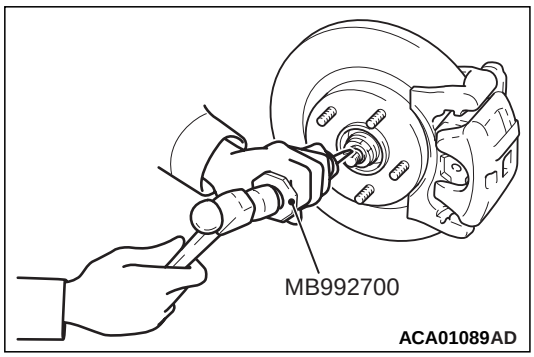

2. Set the special tool Lock Nut Chisel (MB992700) in the groove of the front driveshaft with its " 上 " mark facing upwards. Then strike the staked portion of the front driveshaft nut with the chisel and a hammer to raise up.

⚠ CAUTION

Be careful not to damage the thread of the front driveshaft.

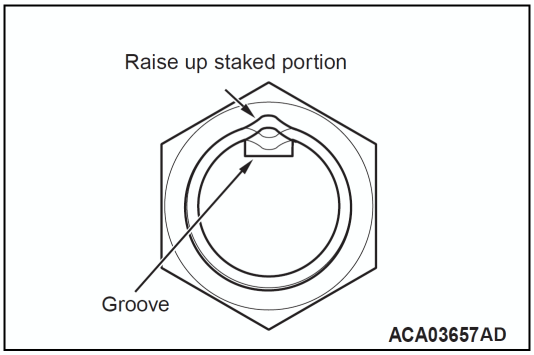

3. Raise up the staked portion of the front driveshaft nut until it does not interfere with the shaft thread.

⚠ CAUTION

- **Never use a impact wrench to loosen the driveshaft nut.**
- **Do not apply the vehicle weight on the wheel bearing with the driveshaft nut loosened. Otherwise, the wheel bearing may be broken.**

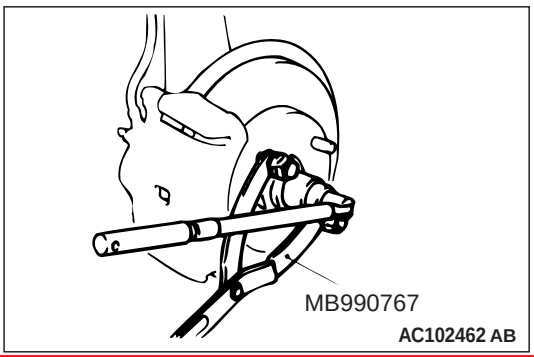

4. Use special tool front hub and flange yoke holder (MB990767) to counter the hub as shown in the figure to remove the driveshaft nut.

②

>>B<< DRIVESHAFT AND HUB KNUCKLE ASSEMBLY CONNECTION

⚠ CAUTION

Insert the driveshaft so that no hub bolt is vertically above the groove of the front drivehshaft assembly.

③

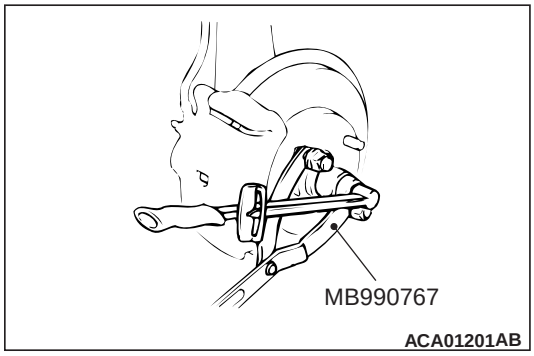

1. Check the hub seated surface for damage or corrosion.Whenever solvent is used for removing the corrosion, the surface should be degreased.
2. Check that the new front drive shaft nut can be turned smoothly by hand. Then tighten it until it is seated.
3. Using special tool front hub and flange yoke holder (MB990767), tighten the driveshaft nut.

   Tightening torque: 270 ± 27 N·m
4. After tightening to the specified torque, check that the nut is seated securely.

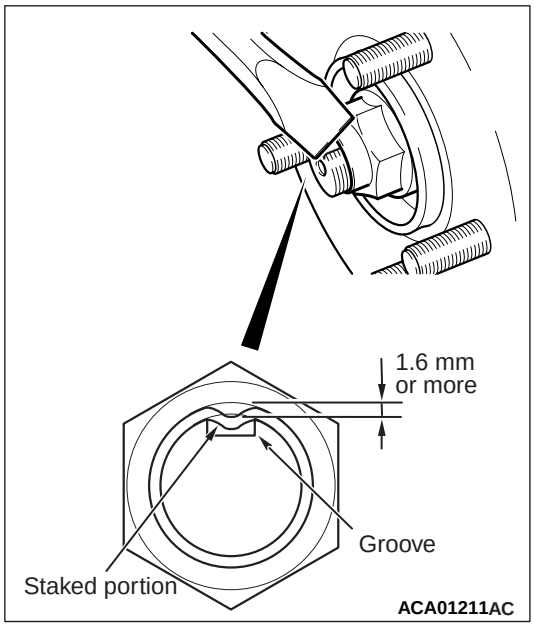

5. Use the chisel and a hammer to stake the nut until the centre in the staked portion reaches the shown dimension.
6. Finally, check that the nut is not cracked at its staked portion.

④

>>C<< FRONT HUB ASSEMBLY AND FRONT DRIVESHAFT CONNECTION

⚠ CAUTION

Insert the driveshaft so that no hub bolt is vertically above the groove of the front drivehshaft assembly.