MITSUBISHI MOTORS

SERVICE BULLETIN

DOMESTIC SALES & AFTER SALES SERVICE OFFICE, MITSUBISHI MOTORS CORPORATION

PURPOSE : INFORMATION	ISSUE NO. : MSB-10E35-006	DATE : 2010-07-05	
SUBJECT : STEERING WHEEL SENSOR		<MODEL> (EUR/RUSSIA) ASX (GA0W)	<M/Y> 11
GROUP : ACTIVE STABILITY CONTROL SYSTEM (ASC)			

1. Description:

Application of grease to steering wheel sensor in installation procedure is abolished to improve serviceability.

2. Applicable Manuals:

<EUR>

Manual	Pub. No.	Title (Info-ID)	Attached Sheet
2011 ASX Workshop Manual	CGWE11E1-CD (English) CGWF11E1-CD (French) CGWG11E1-CD (German) CGWS11E1-CD (Spanish) CGWI11E1-CD (Italian)	Steering Wheel Sensor Removal and Installation (M355-00-510-58800-01)	Attached sheet 1

<RUSSIA>

Underneath Manual	Underneath Pub. No.	Title (Info-ID)	Attached Sheet
2011 ASX Workshop Manual	N/A	Steering Wheel Sensor Removal and Installation (M355-00-510-58800-01)	Attached sheet 1

There may be some attached sheets not included in this Service Bulletin because they are not applicable to your market. Their sheet numbers are not listed in the above table.

3. Details:

See Attached sheet 1.

REMOVAL AND INSTALLATION

⚠ CAUTION

- **Be sure to remove the clock spring from the column switch and centre the clock spring to prevent the damage of steering wheel sensor.**
- **If the centre of the clock spring is not correctly aligned, the steering wheel may not be turned fully or the cable inside the clock spring may be broken, causing the SRS air bag to be inoperative or operated incorrectly.**
- **Before removing the steering wheel/air bag module assembly, refer to GROUP 52B – Service Precautions and Air Bag Module Clock Spring.**
- **When the steering wheel sensor is replaced or installed, always carry out calibration to make ASC-ECU learn the neutral point.**
- **After adjusting the wheel alignment, always carry out calibration of the steering wheel sensor to make ASC-ECU learn the neutral point.**

Pre-removal operation	Post-installation operation
• Position the front wheels in a straight ahead direction.	• Perform steering wheel sensor calibration.

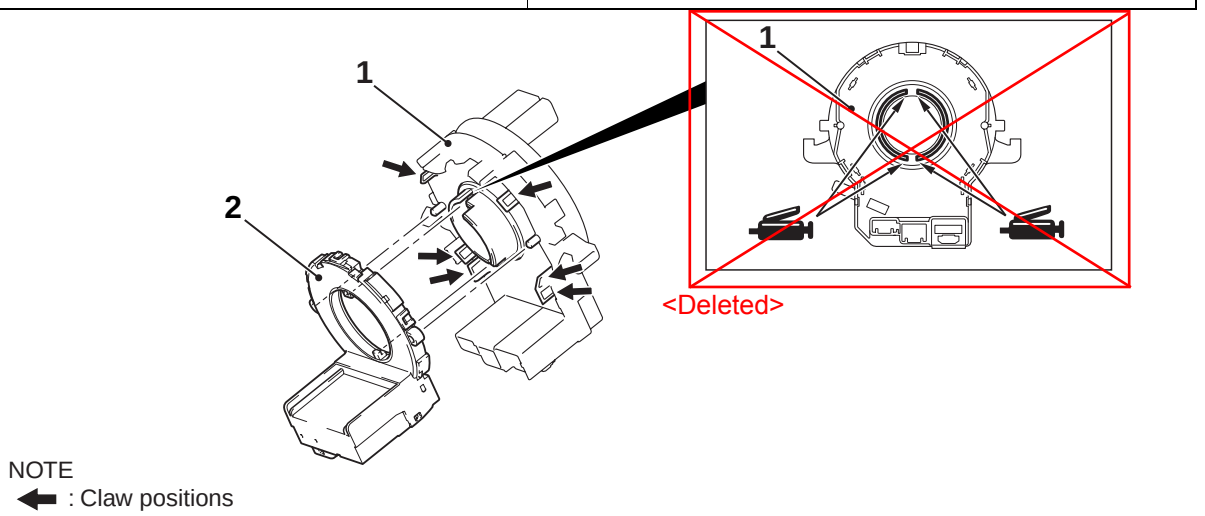

NOTE
⬅ : Claw positions

ACA00066AB

Removal steps

1. Clock spring (Refer to GROUP 52B – Driver's Air Bag Module and Clock Spring).

<<A>> >>A<< 2. Steering wheel sensor

REMOVAL SERVICE POINT

<<A>> STEERING WHEEL SENSOR REMOVAL

⚠ CAUTION

When removing the steering wheel sensor from the clock spring, do not rotate the sensor rotating part with it energised.

Disengage the claws of the clock spring one by one in a clockwise or anti-clockwise direction. Remove the steering wheel sensor from the clock spring.