MITSUBISHI MOTORS

SERVICE BULLETIN

GLOBAL AFTER SALES OFFICE, MITSUBISHI MOTORS CORPORATION

PURPOSE : INFORMATION	ISSUE NO. : MSB-10E55-003	DATE : 2010-12-05	
SUBJECT : REAR HEATER UNIT COMPONENTS		<MODEL> (EUR/RUSSIA/ UKRAINE) PAJERO/MONTERO (V80/V90)	<M/Y> 07–11
GROUP : HEATER, AIR CONDITIONER AND VENTILATION			

1. Description:

In order to improve productivity, the A/C pipe and the joint for the rear heater unit are now integrated into a single part. The service procedure for the rear heater unit has been changed in the applicable Workshop Manuals. This Service Bulletin contains the modified descriptions.

2. Applicable Manuals:

See Attached sheet 1.

Note:
Page number and Info-IDs found in the attached sheet may not agree with the applicable manual.

There may be some attached sheets not included in this Service Bulletin because they are not applicable to your market. Their sheet numbers are not listed in the above table.

3. Effective Date:

From January 2011

4. Details:

See Attached sheet 3.

Attached sheet 1

<EUR>

Manual	Pub. No.	Title (Info-ID)	Attached Sheet
2007 PAJERO/MONTERO Workshop Manual CD-ROM	CBKE07E2-CD (English) CBKS07E2-CD (Spanish) CBKF07E2-CD (French) CBKG07E2-CD (German)	Rear Heater Unit and Rear Blower Removal and Installation (M15504000176ENG0000010000)	Attached sheet 3
2008 PAJERO/MONTERO Workshop Manual CD-ROM	CBKE08E1-CD (English) CBKS08E1-CD (Spanish) CBKF08E1-CD (French) CBKG08E1-CD (German)	Rear Heater Unit and Rear Blower Removal and Installation (M554-01-030-12500-01)	
2009.5 PAJERO/MONTERO Workshop Manual CD-ROM	CBKE09E2-CD (English) CBKS09E2-CD (Spanish) CBKF09E2-CD (French) CBKG09E2-CD (German) CBKI09E2-CD (Italian)		
2010 PAJERO/MONTERO Workshop Manual CD-ROM	CBKE10E1-CD (English) CBKS10E1-CD (Spanish) CBKF10E1-CD (French) CBKG10E1-CD (German) CBKI10E1-CD (Italian)		
2011 PAJERO/MONTERO Workshop Manual CD-ROM	CBKE11E1-CD (English) CBKS11E1-CD (Spanish) CBKF11E1-CD (French) CBKG11E1-CD (German) CBKI11E1-CD (Italian)		

<RUSSIA>

Underneath Manual	Underneath Pub. No.	Title (Info-ID)	Attached Sheet
2010 PAJERO Workshop Manual	N/A	Rear Heater Unit and Rear Blower Removal and Installation (M554-01-030-12500-01)	Attached sheet 3
2011 PAJERO Workshop Manual	N/A		

<UKRAINE>

Manual	Pub. No.	Title (Info-ID)	Attached Sheet
2008 PAJERO Workshop Manual	N/A	Rear Heater Unit and Rear Blower Removal and Installation (M554-01-030-11400-01)	Attached sheet 3

REMOVAL SERVICE POINT

<<A>> LIQUID PIPE D/SUCTION PIPE C REMOVAL

⚠ CAUTION

Use the plug which is not breathable because A/C compressor oil or receiver have high hygroscopicity.

Plug the nipple of pipe to prevent the entry of dust and dirt.

REMOVAL AND INSTALLATION

M1554010300125

Attached sheet 3

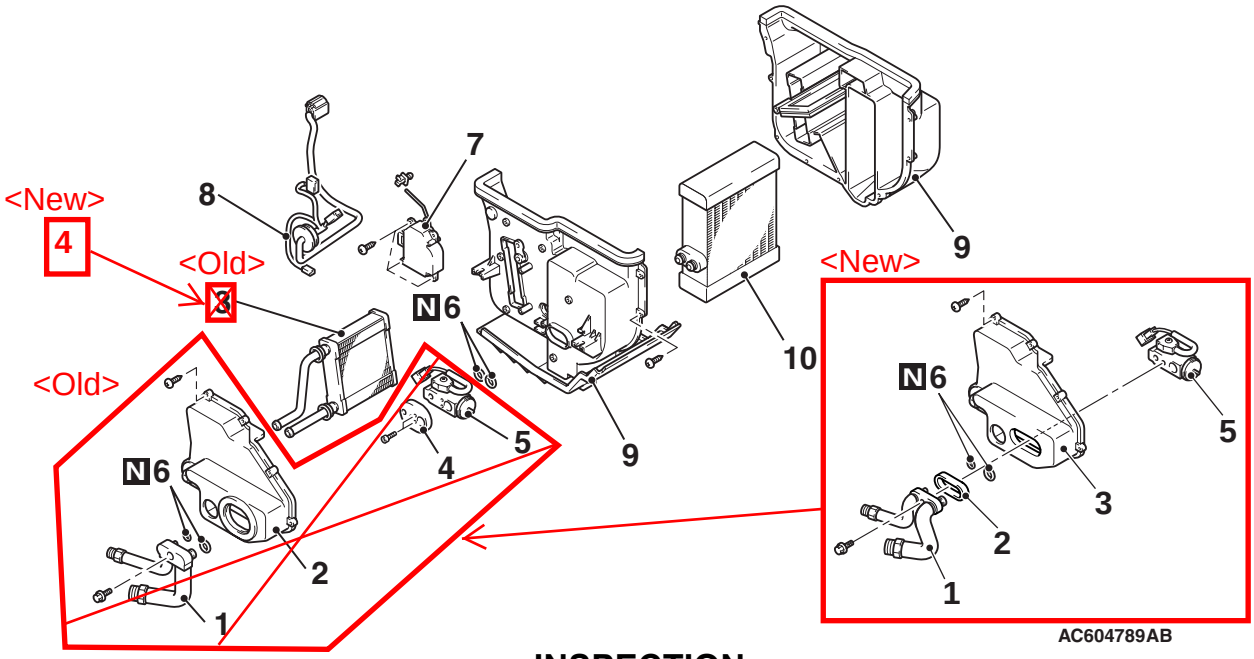

Disassembly steps

1. A/C pipe
2. <Old> ~~Cover~~
3. ~~Heater core~~
4. ~~Joint~~
5. Expansion valve
6. O-ring
7. Rear air mixing damper control motor and potentiometer
8. Harness
9. Case
10. Evaporator

<New>
2. Packing
3. Cover
4. Heater core

INSPECTION

M1554011900283

CHECK THE REAR AIR MIXING DAMPER CONTROL MOTOR AND POTENTIOMETER

⚠ CAUTION

Stop energizing when the lever is set to the operation stopping position.

