MITSUBISHI MOTORS

SERVICE BULLETIN

GLOBAL AFTER SALES OFFICE, MITSUBISHI MOTORS CORPORATION

PURPOSE : INFORMATION	ISSUE NO. : MSB-11E00-018	DATE : 2011-12-20
SUBJECT : POPPET PLUGS FOR FR TRANSMISSIONS AND TRANSFERS		<MODEL> <M/Y>
GROUP : GENERAL		(EUR/RUSSIA) See following 2.Applicable Vehicles/Manuals table.

1. Description:

1) Since the formerly used screw locking agent is discontinued, a new agent is now used for poppet plugs on certain FR manual transmissions and transfers. According to this change, the tightening torques of the poppet plugs are changed.
2) Poppet plugs used on transfers are now specified as non-reusable parts.

This Service Bulletin contains the comparison charts and revised descriptions for the applicable Workshop Manuals.

2. Applicable Vehicles/Manuals:

1) Vehicles equipped with FR V5M31 manual transmissions and transfers
2) See Attached sheet 5 (1/2).

There may be some attached sheets not included in this Service Bulletin because they are not applicable to your market. Their sheet numbers are not listed in the above table.

3. Interchangeability

Interchangeable, provided service parts tightened to new specified torques.

4. Effective Date:

2580A031: From the middle of September 2011
2580A032: From the beginning of October 2011
2580A033: From the middle of September 2011

5. Details:

See Attached sheet 5 (2/2) and 2 to 4.

Attached sheet 5 (1/2)

<EUR>

Manual/Model	<M/Y>	Pub. No.	Info-ID
2007 L200 Workshop Manual (KA0T/KB0T)	07	CCRE07E2-CD (English) CCRS07E2-CD (Spanish) CCRF07E2-CD (French) CCRG07E2-CD (German)	Gr.22B: M222-00-880-04800-01, Gr.23B: M233-01-330-16200-01
2009 L200 Workshop Manual (KA4T/KB4T)	09	CCRE09E1-CD (English) CCRS09E1-CD (Spanish) CCRF09E1-CD (French) CCRG09E1-CD (German) CCRI09E1-CD (Italian)	Gr.22C: M222-00-880-18900-01, Gr.23C: M233-01-330-28100-01
2010 L200 Workshop Manual (KA4T/KB4T)	10	CCRE10E1-CD (English) CCRS10E1-CD (Spanish) CCRF10E1-CD (French) CCRG10E1-CD (German) CCRI10E1-CD (Italian)	Gr.22C: M222-00-880-27500-01, Gr.23C: M233-01-330-33300-01
2011 L200 Workshop Manual (KA4T/KB4T)	11	CCRE11E1-CD (English) CCRS11E1-CD (Spanish) CCRF11E1-CD (French) CCRG11E1-CD (German) CCRI11E1-CD (Italian)	Gr.22C: M222-00-880-30500-01, Gr.23C: M233-01-330-33300-01
2012 L200 Workshop Manual (KA4T/KB4T)	12	CCRE12E1-CD (English) CCRS12E1-CD (Spanish) CCRF12E1-CD (French) CCRG12E1-CD (German) CCRI12E1-CD (Italian)	Gr.22C: M222-00-880-32700-01, Gr.23C: M233-01-330-33300-01

<RUSSIA>

Underneath Manual/Model	<M/Y>	Underneath Pub. No.	Info-ID
2007 L200 Workshop Manual (KA0T/KB0T)	07	N/A	Gr.22B: M222-00-880-04800-01, Gr.23B: M233-01-330-16200-01
2009 L200 Workshop Manual (KA4T/KB4T)	09	N/A	Gr.22C: M222-00-880-18900-01, Gr.23C: M233-01-330-28100-01
2010 L200 Workshop Manual (KA4T/KB4T)	10	N/A	Gr.22C: M222-00-880-27500-01, Gr.23C: M233-01-330-33300-01
2011 L200 Workshop Manual (KA4T/KB4T)	11	N/A	Gr.22C: M222-00-880-30500-01, Gr.23C: M233-01-330-33300-01
2012 L200 Workshop Manual (KA4T/KB4T)	12	N/A	Gr.22C: M222-00-880-32700-01, Gr.23C: M233-01-330-33300-01
2009 NATIVA/PAJERO SPORT Workshop Manual (KH8W)	09	N/A	Gr.22B: M222-00-880-21900-01, Gr.23C: M233-01-330-30000-01
2010 NATIVA/PAJERO SPORT Workshop Manual (KH8W)	10	N/A	Gr.22B: M222-00-880-25300-01, Gr.23C: M233-01-330-30000-01
2011 NATIVA/PAJERO SPORT Workshop Manual (KH8W)	11	N/A	Gr.22B: M222-00-880-25300-01, Gr.23C: M233-01-330-30000-01
2012 NATIVA/PAJERO SPORT Workshop Manual (KH8W)	12	N/A	Gr.22C: M222-00-880-33800-01, Gr.23C: M233-01-330-35500-01

1) A new screw locking agent is now applied to the poppet plugs, including those supplied as service parts. Tightening torques for the poppet plugs are also changed.
For the locations of the poppet plugs, see Attached sheets 2, 3, and 4.

Manual transmission (see Attached sheet 2)

	New	Old
Part No.	2580A031	MR453682
Screw locking agent	ThreeBond 2358 (white)	ThreeBond 2450 (gray)
Tightening torque	27 ± 4 N·m	35 ± 6 N·m

Transfer (see Attached sheets 3 and 4)

	New	Old
Part No.	2580A032	MR534479
Screw locking agent	ThreeBond 2358 (white)	ThreeBond 2450 (gray)
Tightening torque	27 ± 4 N·m	35 ± 6 N·m

Manual transmission and transfer (see Attached sheets 2, 3, and 4)

	New	Old
Part No.	2580A033	MR953861
Screw locking agent	ThreeBond 2358 (white)	ThreeBond 2450 (gray)
Tightening torque	30 ± 4 N·m	35 ± 6 N·m

2) Poppet plugs used on transfers are now specified as non-reusable parts.
For the locations of the poppet plugs, see Attached sheets 3 and 4.

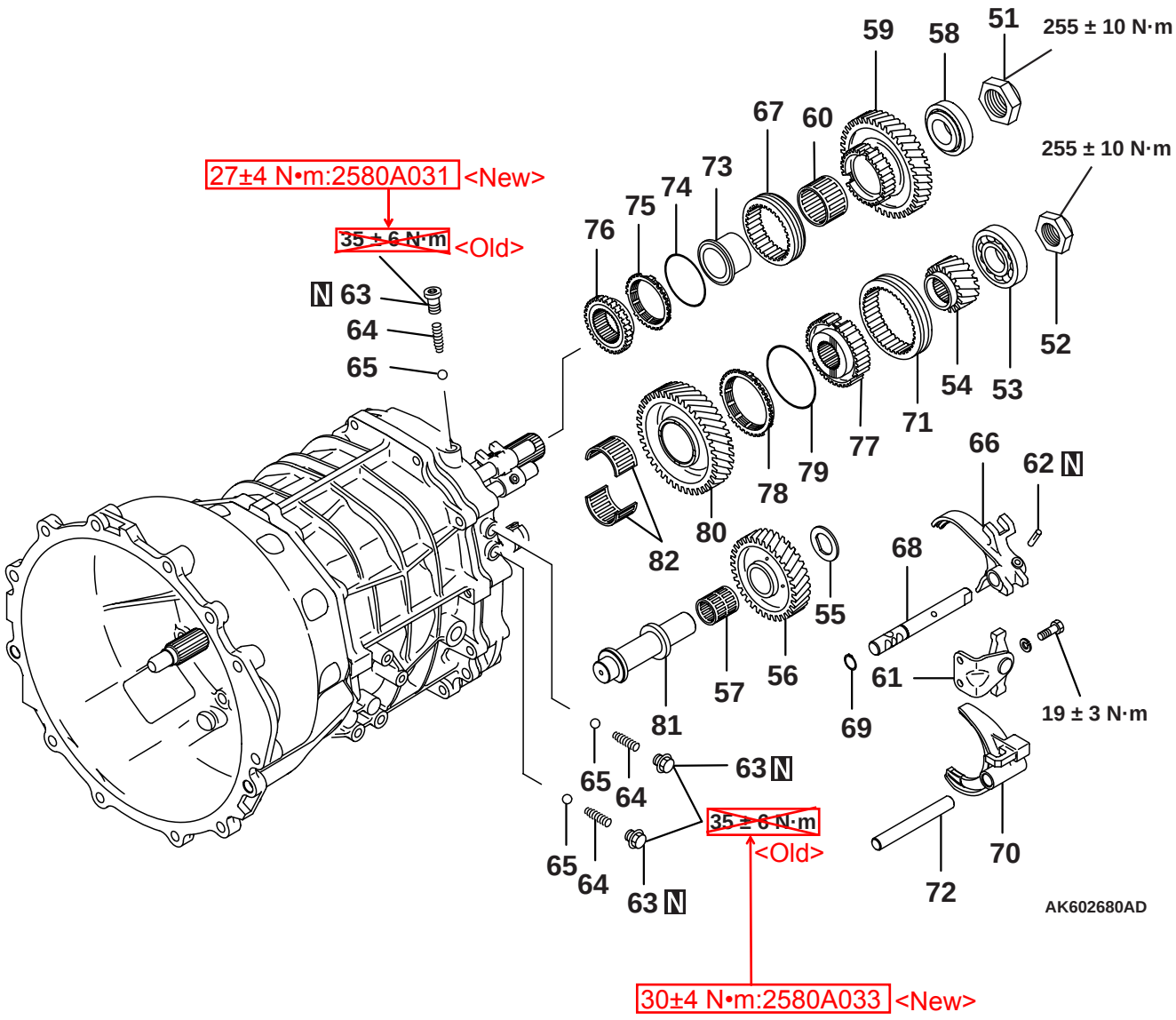
27±4 N•m:2580A031 <New>
35 ± 6 N·m <Old>
255 ± 10 N·m
255 ± 10 N·m
19 ± 3 N·m
35 ± 6 N·m <Old>
30±4 N•m:2580A033 <New>
AK602680AD

DISASSEMBLY AND REASSEMBLY

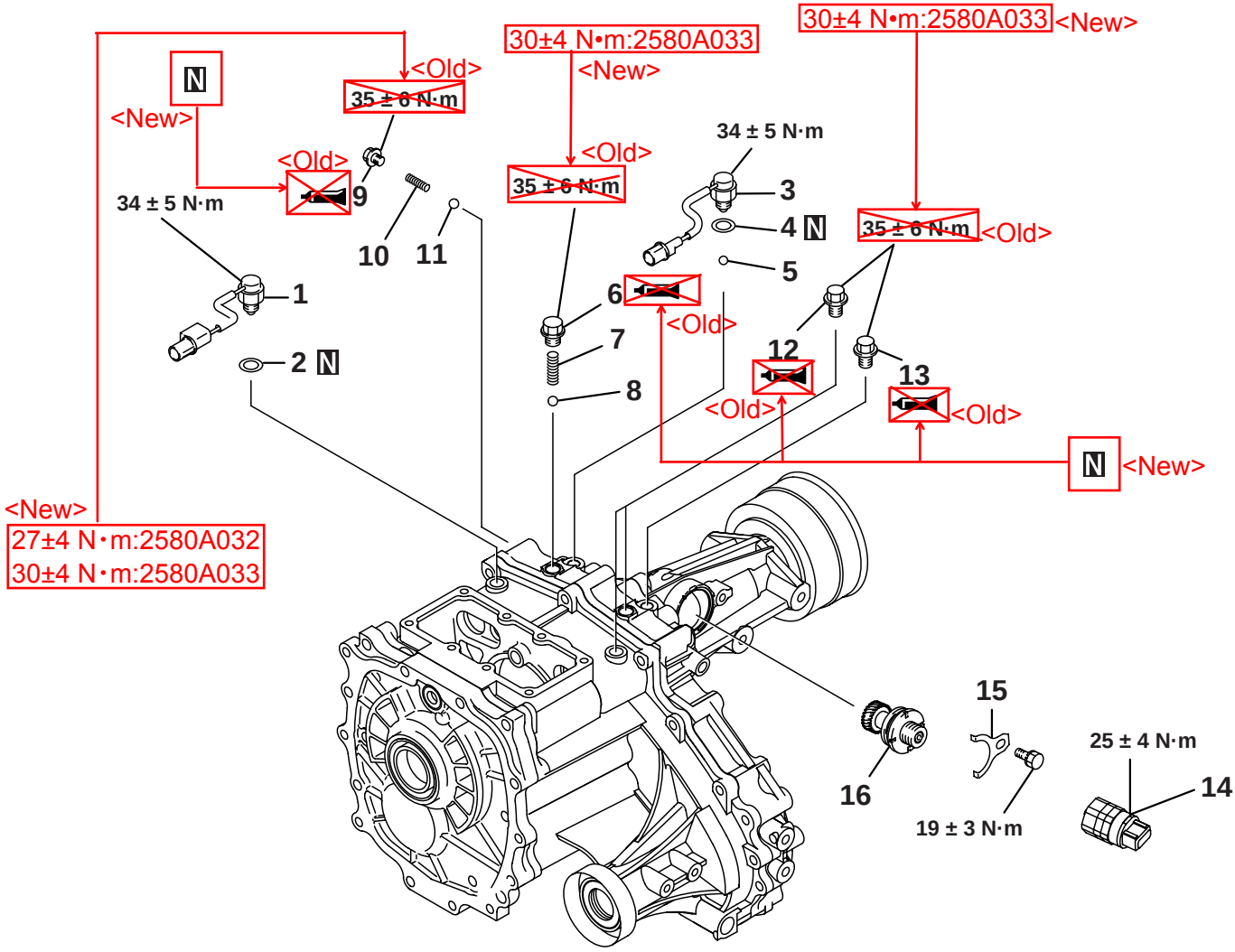

AK500781AB

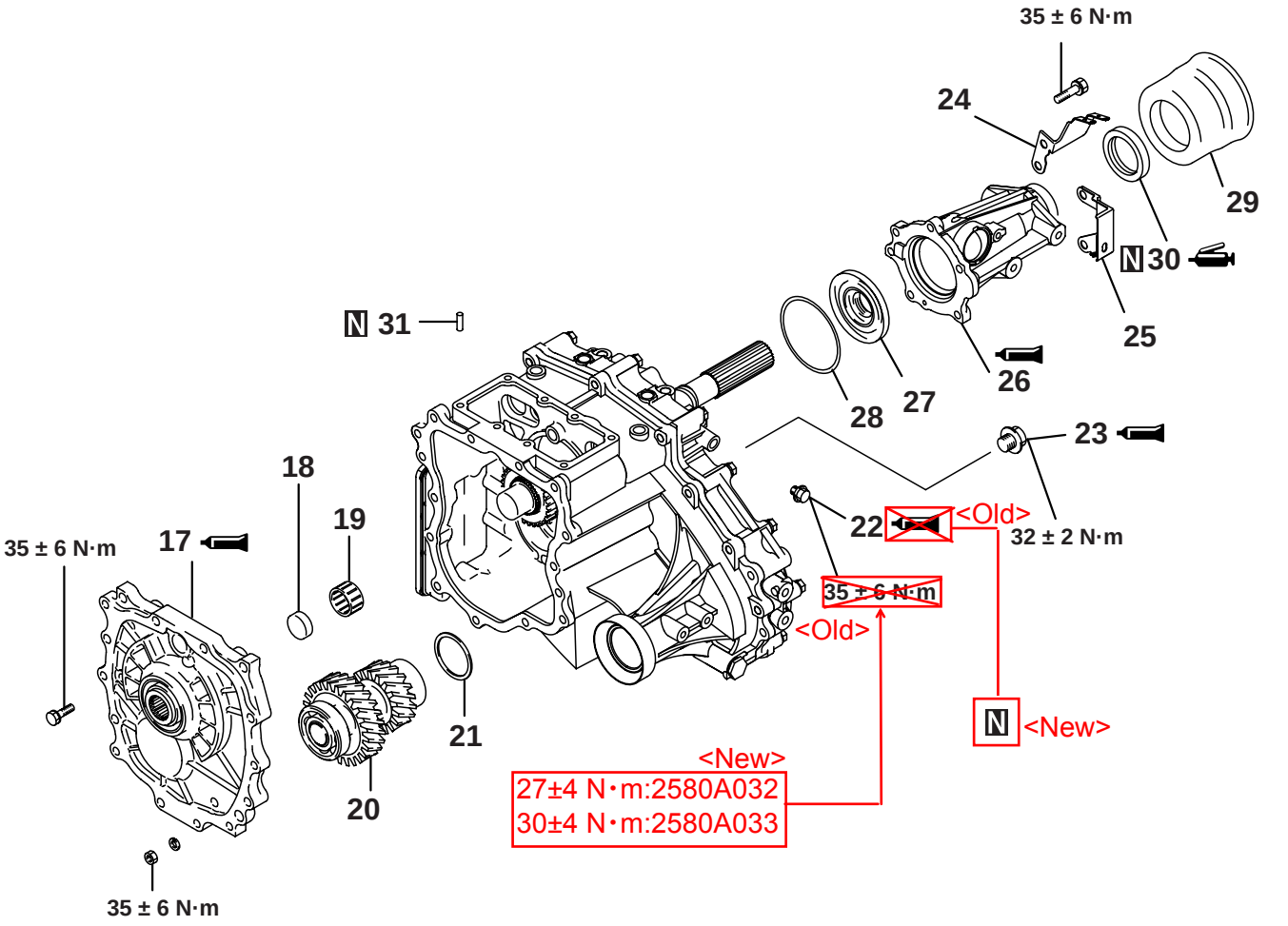
35 ± 6 N·m
24
29
30
25
31
26
28
27
23
18
19
22
<Old>
32 ± 2 N·m
35 ± 6 N·m
17
35 ± 6 N·m
<Old>
<New>
21
<New>
27±4 N·m:2580A032
30±4 N·m:2580A033
20
35 ± 6 N·m

AK500690AB