SERVICE BULLETIN

MITSUBISHI MOTORS

GLOBAL AFTER SALES OFFICE, MITSUBISHI MOTORS CORPORATION

PURPOSE : CORRECTION	ISSUE NO. : MSB-11E00-020A	DATE : 2011-12-14
SUBJECT : The check point of the high voltage part		<MODEL> (EUR) i-MiEV(HA3W) <M/Y> 11/12
GROUP : GENERAL		

1. Description:

An incorrect check point of the high voltage parts has been found in the applicable Service Manual. This contains the corrected information.

2. Applicable Manuals:

Applicable mamual	Pub. No.	Applicable title △A (Applicable page)	Contents
2011 i-MiEV Workshop manual CD-ROM	CHAE11E1-CD(Eng) CHAF11E1-CD(Fre) CHAG11E1-CD(Ger) CHAS11E1-CD(Spa) CHAI11E1-CD(Ita)	Pre-delivery inspection and Periodic maintenance manual ~~PERIODIC INSPECTION AND MAINTENANCE SCHEDULE~~ OPERATIONS INSIDE THE ELECTRIC MOTOR UNIT ROOM. (2-5～2-7)	Attached sheet (1～4)
2012 i-MiEV Workshop manual CD-ROM	CHAE12E1-CD(Eng) CHAF12E1-CD(Fre) CHAG12E1-CD(Ger) CHAS12E1-CD(Spa) CHAI12E1-CD(Ita)		

3. Details:

See Attached sheet (1/4-4/4)

A1.CHECK HIGH VOLTAGE CABLE FOR DAMAGE AND PROPER CONNECTION (EXCEPT MAIN BATTERY)

<Delete>

HIGH-VOLTAGE COMPONENTS

The high-voltage components are described below. Also, wiring harness and connectors of high-voltage circuit are unified with a colour of orange.

- Main battery
- Inverter
- On board charger/DC-DC converter
- Motor (electric motor unit)
- Heater
- A/C COMPRESSOR <Incorrect>
- Regular charging lid
- Quick charging lid
- Service plug
- Wiring harness and connector

Connector

<Correct>

<Incorrect>

SERVICE PRECAUTIONS

DANGER

When adjusting the high-voltage components, be sure to disconnect the service plug in order to shut off the high voltage.

Remove the service plug under the front seat (LH) according to the following procedure, which shuts off the high voltage to the high-voltage system.Also, when installing the service plug and the service lid, follow the service plug and service lid installation steps.

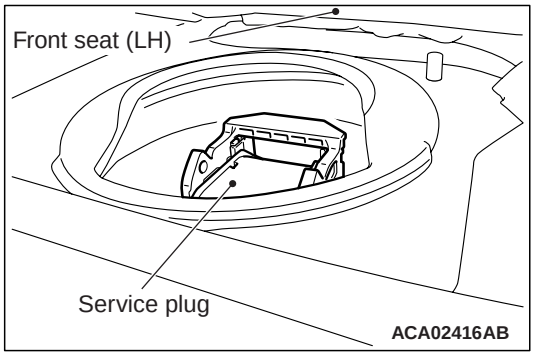

SERVICE PLUG AND SERVICE LID REMOVAL STEPS

1. Turn the electric motor switch to "LOCK" (OFF).

WARNING

- ***To avoid causing any trouble to the electric motor unit components, do not disconnect the auxiliary battery negative terminal for 1 minute after turning the electric motor switch to "LOCK" (OFF).***
- ***The voltage of the smooth condenser in the inverter must be decreased thoroughly. Therefore, do not remove the service plug for 5 minutes after the negative terminal of the auxiliary battery is disconnected.***

2. Disconnect the negative terminal of the auxiliary battery.

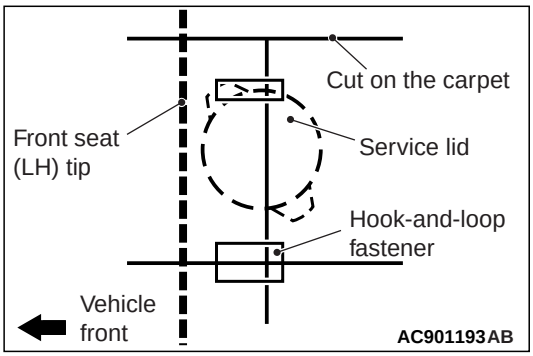

3. Slide the front seat (LH) to the end, and turn up the carpet under the front seat (LH).

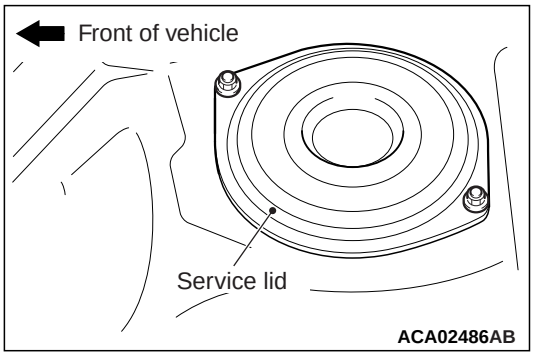

4. Remove the service lid mounting nut, and then remove the service lid.

DANGER

- ***Wear the electric insulation gloves when pulling out the service plug.***
- ***Do not lift the lever of service plug by halve. It is dangerous because the current is supplied during the lifting operation. Be sure to remove the service plugs all at once.***

WARNING

The voltage of the smooth condenser in the inverter must be decreased thoroughly. Therefore, do not remove the service plug for 5 minutes after the negative terminal of the auxiliary battery is disconnected.

5. Lift the service plug lever.

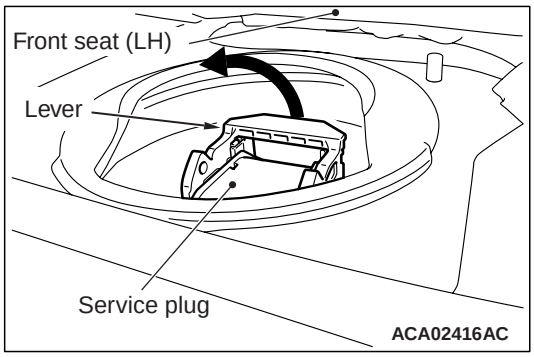

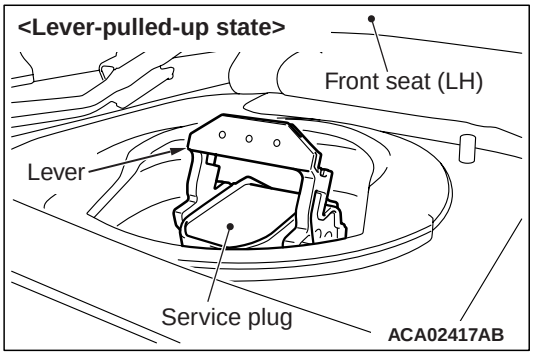

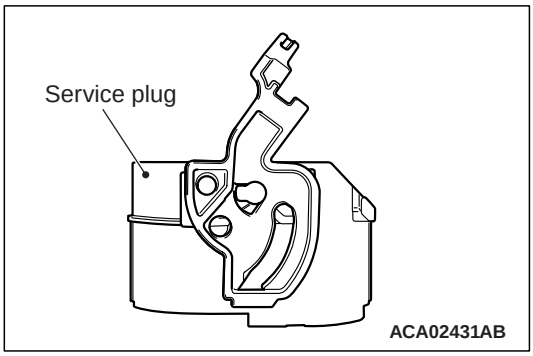

DANGER

After removing the service plug, insulate the plug installed part of the main battery securely.

6. Remove the service plug.

HIGH VOLTAGE CABLE CHECK

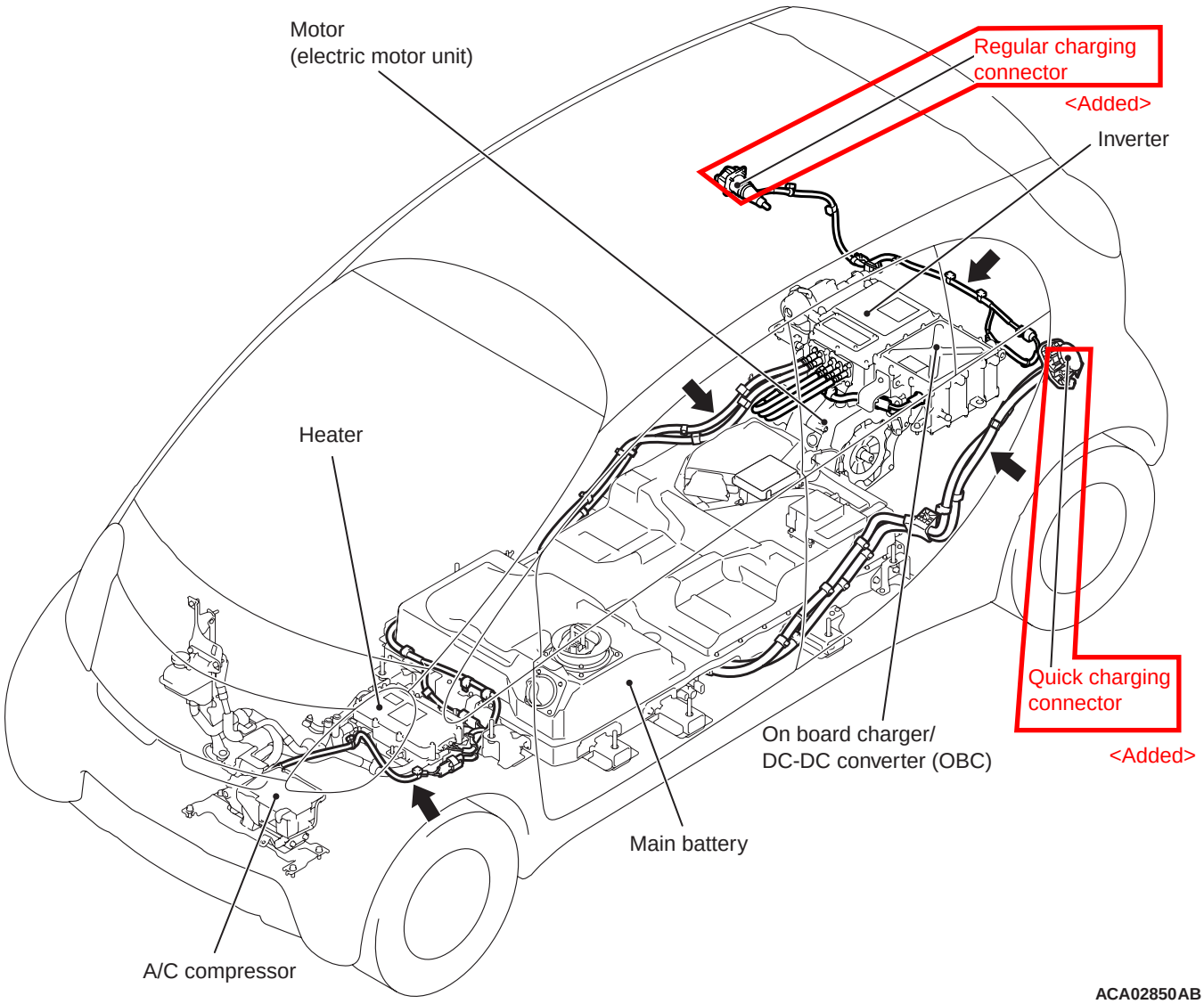

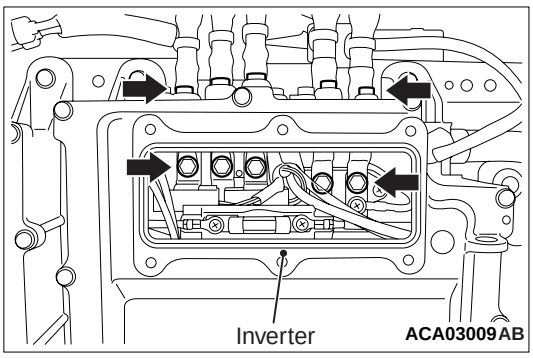

Check the high voltage cable for the following items:

- Check the connections for looseness by wiggling connectors or checking tightening torque of threaded fasteners.
- Visually check electrical wires for damage and wire clamps for looseness.
- Check that electrical wires do not interfere with surrounding components.