MITSUBISHI MOTORS

SERVICE BULLETIN

GLOBAL AFTER SALES OFFICE, MITSUBISHI MOTORS CORPORATION

PURPOSE : CORRECTION	ISSUE NO. : MSB-11E26-501	DATE : 2011-03-05
SUBJECT : FRONT CALIPER ASSEMBLY AND FRONT HUB ASSEMBLY MOUNTING BOLT TIGHTENING TORQUES		<MODEL> <M/Y>
GROUP : FRONT AXLE		(EUR/RUSSIA/ UK(Japanese Domestic Spec.)) See following 2. Applicable Manuals table.

1. Description:

The tightening torque values for the front caliper mounting bolts and front hub assembly mounting bolts have been incorrect in the applicable Workshop Manuals. This Service Bulletin contains the corrected descriptions.

2. Applicable Manuals:

See Attached sheet 1.

There may be some attached sheets not included in this Service Bulletin because they are not applicable to your market. Their sheet numbers are not listed in the above table.

3. Corrected Specifications:

See Attached sheet 2.

Attached sheet 1

<EUR>

Manual/Model	<M/Y>	Pub. No.	Title (Info-ID)	Attached Sheet
2009 LANCER EVOLUTION Workshop Manual CD-ROM (CZ0A)	09	CGEE09E1-CD (English) CGES09E1-CD (Spanish) CGEF09E1-CD (French) CGEG09E1-CD (German) CGEI09E1-CD (Italian)	Front Axle Hub Assembly Removal and Installation (M261-00-171-43100-01)	Attached sheet 2
			Front Axle Hub Assembly Removal and Installation (M261-00-171-45301-01)	
			Front Axle Hub Assembly Removal and Installation (M261-00-171-45300-01)	
2010 LANCER EVOLUTION Workshop Manual CD-ROM (CZ0A)	10	CGEE10E1-CD (English) CGES10E1-CD (Spanish) CGEF10E1-CD (French) CGEG10E1-CD (German) CGEI10E1-CD (Italian)	Front Axle Hub Assembly Removal and Installation (M261-00-171-63500-01)	Attached sheet 2
2011 LANCER EVOLUTION Workshop Manual CD-ROM (CZ0A)	11	CGEE11E1-CD (English) CGES11E1-CD (Spanish) CGEF11E1-CD (French) CGEG11E1-CD (German) CGEI11E1-CD (Italian)	Front Axle Hub Assembly Removal and Installation (M261-00-171-63500-01)	Attached sheet 2

<RUSSIA>

Underneath Manual/Model	<M/Y>	Underneath Pub. No.	Title (Info-ID)	Attached Sheet
2010 LANCER EVOLUTION Workshop Manual (CZ0A)	10	N/A	Front Axle Hub Assembly Removal and Installation (M261-00-171-63500-01)	Attached sheet 2
2011 LANCER EVOLUTION Workshop Manual (CZ0A)	11	N/A	Front Axle Hub Assembly Removal and Installation (M261-00-171-63500-01)	Attached sheet 2

<UK (Japanese Domestic Specification)>

Manual/Model	<M/Y>	Pub. No.	Title (Info-ID)	Attached Sheet
2008 LANCER EVOLUTION X Workshop Manual (CZ0A)	08	N/A	Front Axle Hub Assembly Removal and Installation (M261-00-171-35600-01)	Attached sheet 2

<Vehicles with 18 inch brake>

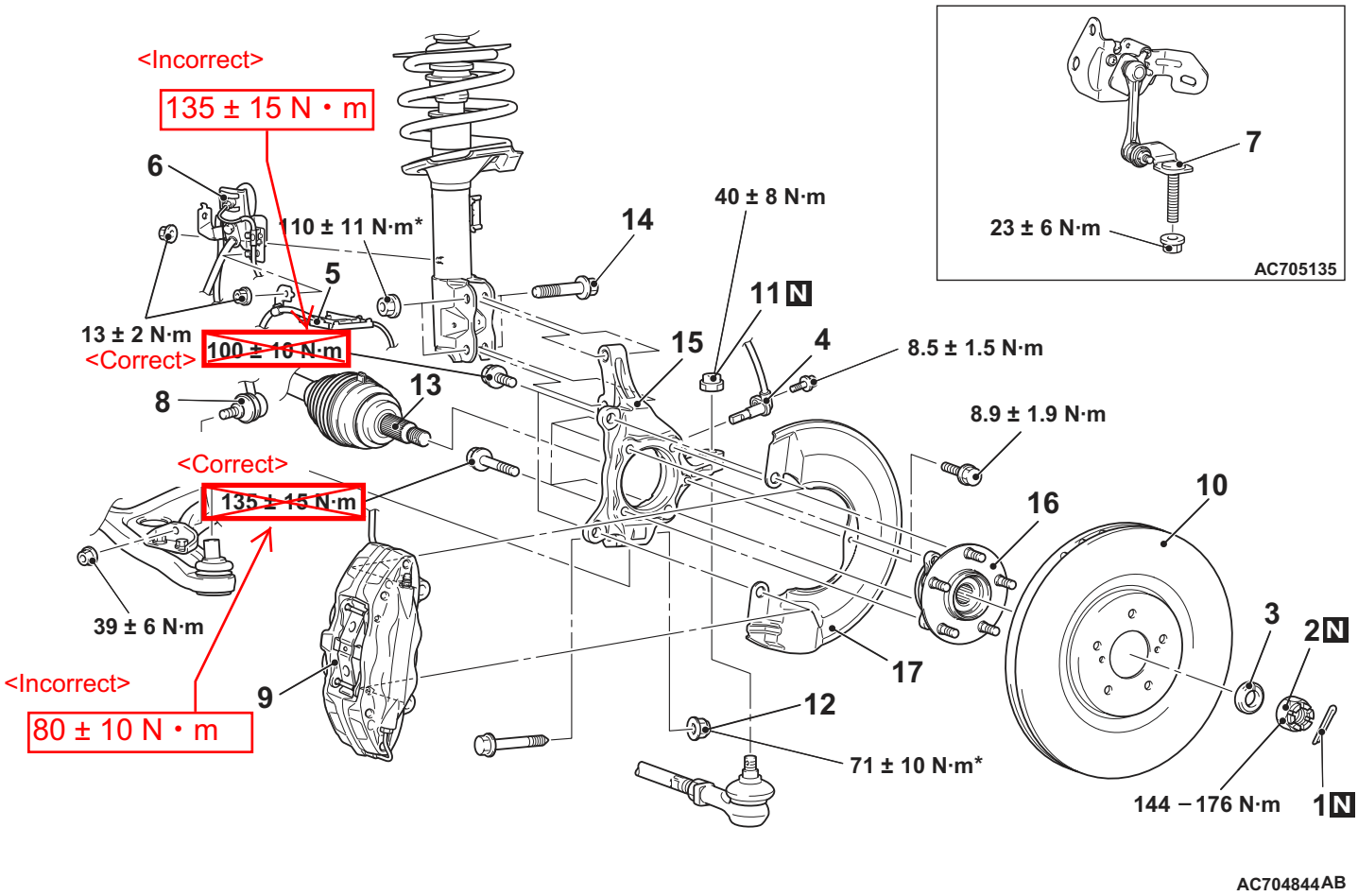

AC704844AB

			Removal steps
		1.	Split pin
<<A>>	>>B<<	2.	Front driveshaft nut
	>>B<<	3.	Washer
		4.	Front wheel speed sensor
		5.	Front wheel speed sensor harness clip
		6.	Brake hose bracket
		7.	Front height sensor to lower arm connection
		8.	Front stabilizer link and lower arm connection
<<B>>		9.	Front caliper assembly
<<C>>		10.	Front brake disk
<<D>>		11.	Self locking nut (tie-rod end connection)
		12.	Nut (lower arm ball joint connection)
<<E>>		13.	Front hub assembly and front driveshaft assembly connection
	>>A<<	14.	Knuckle and strut assembly connection bolt
		15.	Knuckle
		16.	Front hub assembly
		17.	Dust shield