SERVICE BULLETIN

MITSUBISHI MOTORS

GLOBAL AFTER SALES OFFICE. MITSUBISHI MOTORS CORPORATION

PURPOSE : INFORMATION	ISSUE NO. : MSB-11E52-001	DATE : 2011-12-26
SUBJECT : INFORMATION ON 2012 i-MiEV		<MODEL> (EUR) i-MiEV(HA3W) / <M/Y> 12
GROUP : GENERAL		

1. Description:

This Service Bulletin contains the information about change of the maintenance points for 2012MY i-MiEV.

2. Applicable Manuals:

Applicable manual	Pub.No.	Applicable title(INFO ID)	Content
2012 i-MiEV WORKSHOP MANUAL	CHAE12E1-CD(Eng) CHAF12E1-CD(Fre) CHAG12E1-CD(Ger) CHAS12E1-CD(Spa) CHAI12E1-CD(Ita)-	DOOR TRIM REMOVAL AND INSULATION (M521-00-640-90100-01)	Attached sheet 2

3. Details:

See Attached sheet 2(1/2-2/2)

Attached sheet 2 (1/2)

DOOR TRIM

REMOVAL AND INSTALLATION

M1521006400901

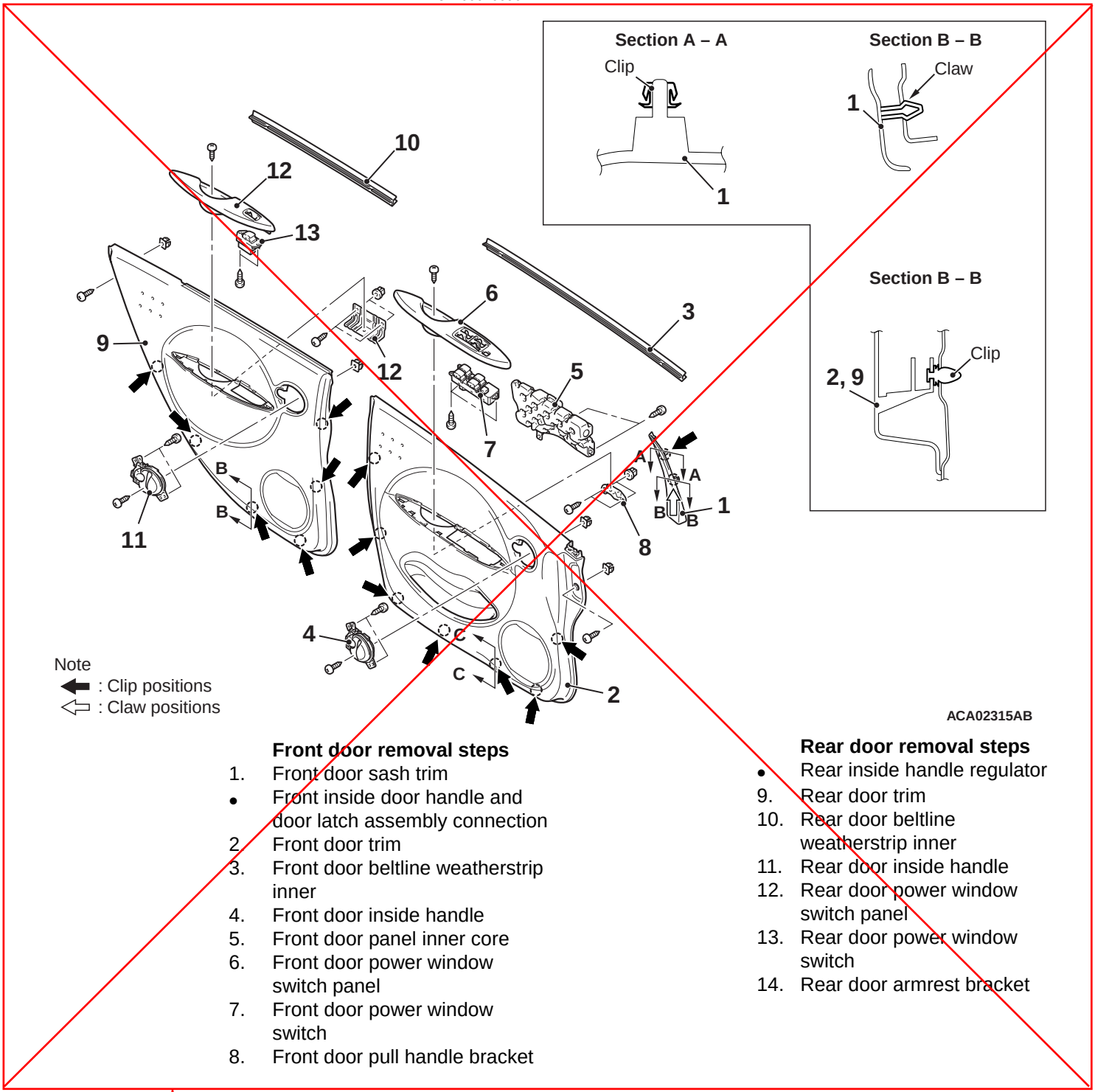

Front door removal steps

1. Front door sash trim
- Front inside door handle and door latch assembly connection
2. Front door trim
3. Front door beltline weatherstrip inner
4. Front door inside handle
5. Front door panel inner core
6. Front door power window switch panel
7. Front door power window switch
8. Front door pull handle bracket

Rear door removal steps

- Rear inside handle regulator
9. Rear door trim
10. Rear door beltline weatherstrip inner
11. Rear door inside handle
12. Rear door power window switch panel
13. Rear door power window switch
14. Rear door armrest bracket

<Old>

Inset the attached sheet 2 (2/2)

<New>

<New>

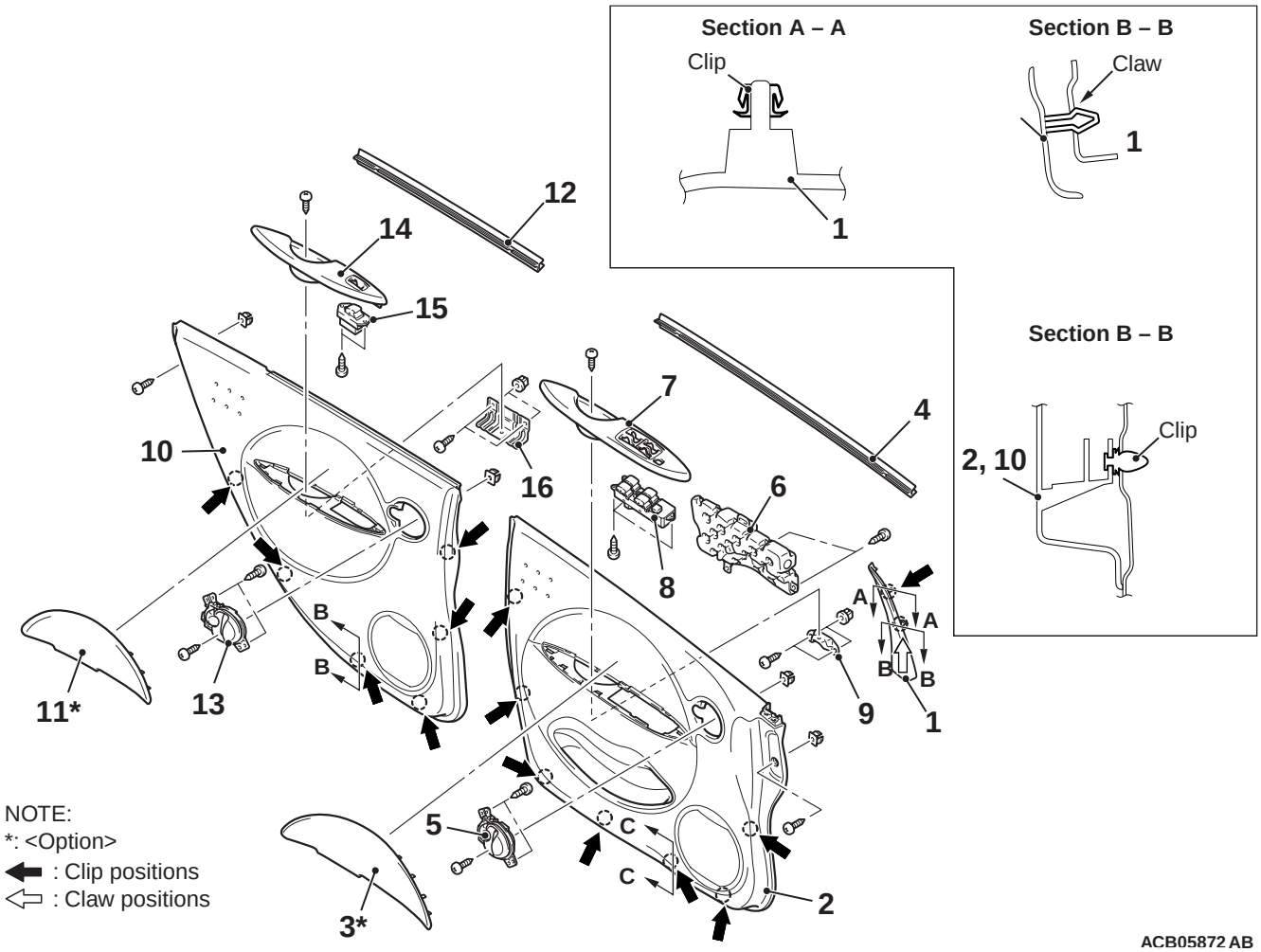

Front door removal steps

1. Front door sash trim
- Front inside door handle and door latch assembly connection
2. Front door trim
3. Front door trim upper <Option>
4. Front door beltline weatherstrip inner
5. Front door inside handle
6. Front door panel inner core
7. Front door power window switch panel
8. Front door power window switch
9. Front door pull handle bracket

Rear door removal steps

- Rear inside handle regulator
10. Rear door trim
11. Rear door trim upper <Option>
12. Rear door beltline weatherstrip inner
13. Rear door inside handle
14. Rear door power window switch panel
15. Rear door power window switch
16. Rear door armrest bracket