SERVICE BULLETIN

MITSUBISHI MOTORS

GLOBAL AFTER SALES OFFICE, MITSUBISHI MOTORS CORPORATION

PURPOSE : INFORMATION	ISSUE NO. : MSB-12E00-005	DATE : 2012-11-28
SUBJECT : INFORMATION ON 2014 LANCER/LANCER SPORTBACK		<Destination/Model> (EUR/RUSSIA) <M/Y> 14
GROUP : GENERAL		LANCER/LANCER SPORTBACK(CY0A/CX0A)

1. Description:

This Service Bulletin contains the information about the 2014 LANCER/LANCER SPORTBACK Workshop Manual

2. Applicable manual:

Applicable manual	Pub. No.	Contents
2013 LANCER/LANCER SPORTBACK Workshop Manual (EU/RUSSIA)	CG1E13E1-CD(ENG) CG1F13E1-CD(FRE) CG1G13E1-CD(GER) CG1S13E1-CD(SPA) CG1I13E1-CD(ITA) RUSSIA:N/A	Attached sheet

3. Details:

See Attached sheets

It is the change about the following groups.

① Gr:00
② Gr:13A
③ Gr:52B
④ Gr:55A

GROUP 00

GENERAL

CONTENTS

VEHICLE IDENTIFICATION 00-2
MODELS <LANCER> 00-2
MODELS <LANCER SPORTBACK> 00-4
VEHICLE IDENTIFICATION NUMBER (CHASSIS NUMBER) 00-5
VEHICLE IDENTIFICATION NUMBER (VIN) PLATE 00-7

GENERAL DATA AND SPECIFICATIONS 00-8
GENERAL DATA AND SPECIFICATIONS <LANCER> 00-8
GENERAL DATA AND SPECIFICATIONS <LANCER SPORTBACK> 00-15

VEHICLE IDENTIFICATION

MODELS <LANCER>

M1001000307386

VEHICLES FOR EUROPE

<1600>

Model code		Engine model	Transmission model	Fuel supply system
CY1A	SRSPL6	4A92 (1,590 mL) DOHC MIVEC petrol engine <Low CO_2 specification>	F4A4A (Front wheel drive 2WD, 4A/T)	MPI
	SNSPL6		F5M43 (Front wheel drive 2WD, 5M/T)	
	SNSPR6			
	SNSXL6	4A92 (1,590 mL) DOHC MIVEC petrol engine <Low CO_2 specification> with Auto Stop & Go (AS&G) <Clear Tec AS&G>		

<1800>

Model code		Engine model	Transmission model	Fuel supply system
CY6A	SNSPL6	4J10 (1,798 mL) SOHC MIVEC petrol engine <Low CO_2 specification>	F5MBB (Front wheel drive 2WD, 5M/T)	MPI
	STXPL6		F1CJA (Front wheel drive 2WD, INVECS-III CVT with sport mode)	
	SNXXL6	4J10 (1,798 mL) SOHC MIVEC petrol engine <Low CO_2 specification> with Auto Stop & Go (AS&G) <Clear Tec AS&G>	F5MBB (Front wheel drive 2WD, 5M/T)	
CY9A	SJLSL6	4N13 (1,798 mL) DOHC Low-power diesel engine with intercooled turbocharger <Low CO_2 specification>, Auto Stop & Go (AS&G) <Clear Tec AS&G>	F6MBA (Front wheel drive 2WD, 6M/T)	Common rail fuel injection (Electrical fuel injection)
	SJSSL6			

VEHICLES FOR RUSSIA (EASTERN EUROPE COUNTRIES)

<1600>

Model code		Engine model	Transmission model	Fuel supply system
CY1A	SNSHL6Z	4A92 (1,590 mL) DOHC MIVEC petrol engine	F5M43 (Front wheel drive 2WD, 5M/T)	MPI
	SNLHL6Z			
	SRSHL6Z		F4A4A (Front wheel drive 2WD, 4A/T)	

<1800>

Model code		Engine model	Transmission model	Fuel supply system
CY3A	SNSHL6Z	4B10 (1,798 mL) DOHC MIVEC petrol engine	F5MBB (Front wheel drive 2WD, 5M/T)	MPI
	STSHL6Z		F1CJA (Front wheel drive 2WD, INVECS-III CVT with sport mode)	

MODEL CODE

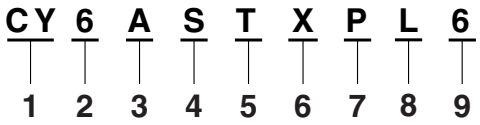

ACB01720

No.	Item	Content	
1	Development	CY	LANCER
2	Engine type	1	1.6L petrol engine (4A92)
		3	1.8L petrol engine (4B10)
		6	1.8L petrol engine (4J10)
		9	1.8L diesel engine (4N13)
3	Vehicle type	A	Passenger car
4	Body style	S	4-door sedan
5	Transmission type	J	6M/T
		N	5M/T
		R	4A/T
		T	CVT
6	Price class (Trim level)	L	BASE
			INFORM <Vehicles for Russia>
		S	INFORM <Vehicles for Europe (Except for Russia)>
			INVITE <Vehicles for Russia>
		X	INTENSE
7	Engine specification	H	MIVEC (DOHC)
		P	Low CO_2 specification <Petrol engine>
		S	Intercooled turbocharger (Low-power)
		X	Auto Stop & Go (AS&G) <Clear Tec AS&G>
8	Steering wheel location	L	Left hand drive
		R	Right hand drive
9	Destination	6	Vehicles for Europe (Except for Eastern Europe countries)
		6Z	Vehicles for Russia (Eastern Europe countries)

MODELS <LANCER SPORTBACK>

M1001000307397

<1600>

Model code		Engine model	Transmission model	Fuel supply system
CX1A	LNSPL6	4A92 (1,590 mL) DOHC MIVEC petrol engine <Low CO_2 specification>	F5M43 (Front wheel drive 2WD, 5M/T)	MPI
	LNSXL6	4A92 (1,590 mL) DOHC MIVEC petrol engine <Low CO_2 specification> with Auto Stop & Go (AS&G) <Clear Tec AS&G>		

<1800>

Model code		Engine model	Transmission model	Fuel supply system
CX6A	LNSPL6	4J10 (1,798 mL) SOHC MIVEC petrol engine <Low CO_2 specification>	F5MBB (Front wheel drive 2WD, 5M/T)	MPI
	LTSPL6		F1CJA (Front wheel drive 2WD, INVECS-III CVT with sport mode)	
	LNXXL6	4J10 (1,798 mL) SOHC MIVEC petrol engine <Low CO_2 specification>, Auto Stop & Go (AS&G) <Clear Tec AS&G>	F5MBB (Front wheel drive 2WD, 5M/T)	
CX9A	LJLSL6	4N13 (1,798 mL) DOHC Low-power diesel engine with Intercooled turbocharger <Low CO_2 specification>, Auto Stop & Go (AS&G) <Clear Tec AS&G>	F6MBA (Front wheel drive 2WD, 6M/T)	Common rail fuel injection (Electrical fuel injection)
	LJSSL6			
	LJLXL6	4N13 (1,798 mL) DOHC MIVEC diesel engine with Intercooled turbocharger <Low CO_2 specification>, Auto Stop & Go (AS&G) <Clear Tec AS&G>		
	LJSXL6			

MODEL CODE

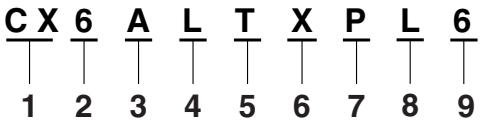

ACB01721

No.	Item	Content	
1	Development	CX	LANCER SPORTBACK
2	Engine type	1	1.6 L petrol engine (4A92)
		6	1.8 L petrol engine (4J10)
		9	1.8 L diesel engine (4N13)
3	Vehicle type	A	Passenger car
4	Body style	L	4-door with tailgate
5	Transmission type	J	6M/T
		N	5M/T
		T	CVT
6	Price class (Trim level)	L	BASE
		S	INFORM
		X	INTENSE
7	Engine specification	P	Low CO_2 specification <Petrol engine>
		S	Intercooled turbocharger (Low-power)
		X	Auto Stop & Go (AS&G) <Clear Tec AS&G>
8	Steering wheel location	L	Left hand drive
9	Destination	6	Vehicles for Europe

VEHICLE IDENTIFICATION NUMBER (CHASSIS NUMBER)

M1001005603261

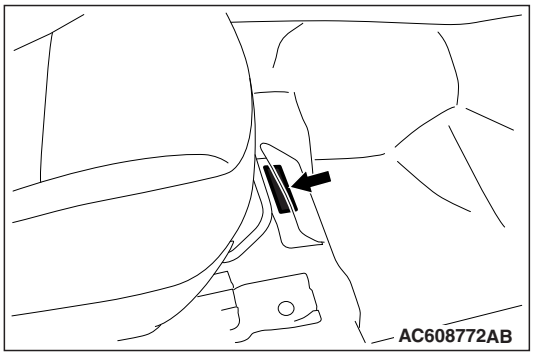

The vehicle identification number (chassis number) is stamped on the front floor pan right side.

CODE CHART

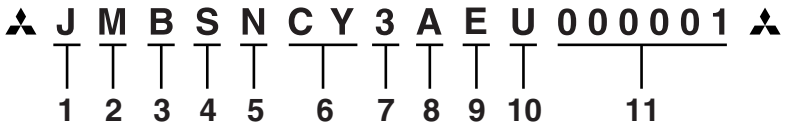

AC809191AG

No.	Item	Content	
1	Country	J	Japan
2	Make	M	Mitsubishi Motors Corporation.
3	Destination	A	Vehicles for Europe, right hand drive
		B	Vehicles for Europe, left hand drive
4	Body style	S	4-door sedan
		L	4-door with tailgate
5	Transmission type	J	6M/T
		N	5M/T
		R	4A/T
		T	CVT
6	Development order	CY	LANCER
		CX	LANCER SPORTBACK
7	Engine type	1	1.6L petrol engine (4A92)
		3	1.8L petrol engine (4B10)
		6	1.8L petrol engine (4J10)
		9	1.8L diesel engine (4N13)
8	Vehicle type	A	Passenger car
9	Model year	E	2014 year
10	Plant	U	Mizushima
11	Serial number	000001 to 999999	

VEHICLE IDENTIFICATION NUMBER (VIN) PLATE

M1001005502476

<RIGHT HAND DRIVE VEHICLES>

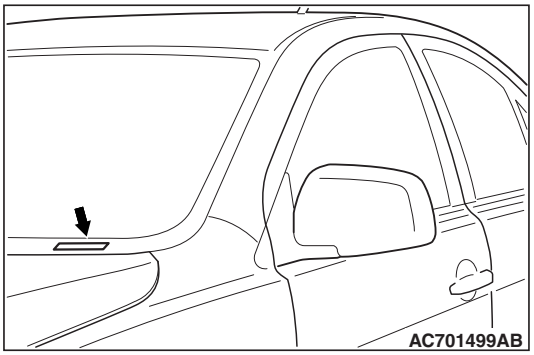

The vehicle identification number (VIN) plate is located on a plate attached to the left top side of the instrument panel.

CODE CHART

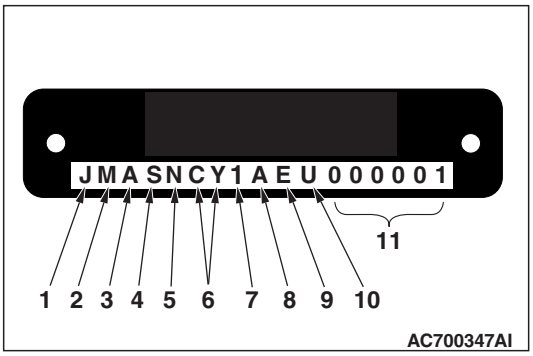

No.	Item	Content	
1	Country	J	Japan
2	Make	M	Mitsubishi Motors Corporation.
3	Destination	A	Vehicles for Europe, right hand drive
4	Body style	S	4-door sedan
5	Transmission type	N	5M/T
6	Development order	CY	LANCER
7	Engine type	1	1.6L (4A92)
8	Vehicle type	A	Passenger car
9	Model year	E	2014 year
10	Plant	U	Mizushima
11	Serial number	000001 to 999999	

GENERAL DATA AND SPECIFICATIONS

GENERAL DATA AND SPECIFICATIONS <LANCER>

M1001000907742

VEHICLES FOR EUROPE

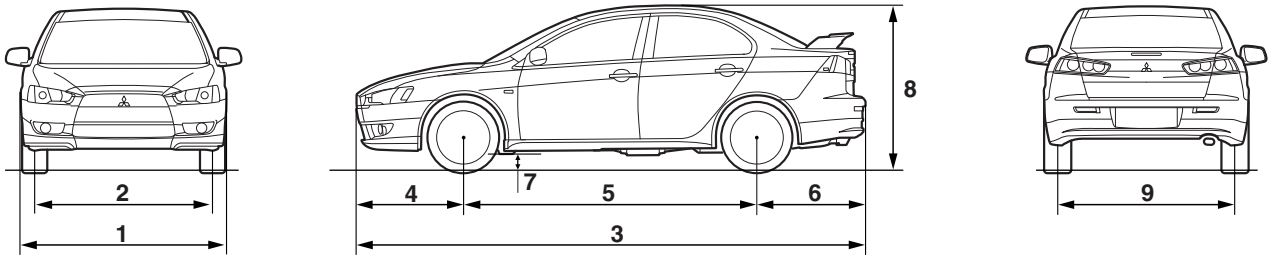

AC608677AB

<1600>

Item			INFORM	
			CY1A	
			SRSPL6	SNSPL6/SNSPR6
Vehicle dimension mm	Overall width	1	1,760	1,760
	Front track	2	1,530	1,530
	Overall length	3	4,570	4,570
	Front overhang	4	955	955
	Wheelbase	5	2,635	2,635
	Rear overhang	6	980	980
	Ground clearance (unladen)	7	140	140
	Overall height (unladen)	8	1,480	1,480
	Rear track	9	1,530	1,530
Vehicle weight kg	Kerb weight	Without optional parts	1,270	1,260
		With optional parts	1,313	1,292
	Max. gross vehicle weight		1,750	1,750
	Max. axle weight rating-front		905	905
	Max. axle weight rating-rear		915	915
Seating capacity			5	5
Engine	Model code		4A92	4A92
	Type		DOHC MIVEC <Low CO_2 specification>	DOHC MIVEC <Low CO_2 specification>
	Total displacement mL		1,590	1,590
Fuel system	Fuel supply system		MPI	MPI
Transmission	Model code		F4A4A	F5M43
	Type		Front wheel drive 2WD, 4A/T	Front wheel drive 2WD, 5M/T
Turning radius m	Wheel		5.0	5.0
	Body		5.4	5.4

Item				INFORM
				CY1A
				SNSXL6
Vehicle dimension mm	Overall width		1	1,760
	Front track		2	1,530
	Overall length		3	4,570
	Front overhang		4	955
	Wheelbase		5	2,635
	Rear overhang		6	980
	Ground clearance (unladen)		7	140
	Overall height (unladen)		8	1,480
	Rear track		9	1,530
Vehicle weight kg	Kerb weight	Without optional parts		1,260
		With optional parts		1,292
	Max. gross vehicle weight			1,750
	Max. axle weight rating-front			905
	Max. axle weight rating-rear			915
Seating capacity				5
Engine	Model code			4A92
	Type			DOHC MIVEC <Low CO_2 specification>, Auto Stop & Go (AS&G) <Clear Tec AS&G>
	Total displacement mL			1,590
Fuel system	Fuel supply system			MPI
Transmission	Model code			F5M43
	Type			Front wheel drive 2WD, 5M/T
Turning radius m	Wheel			5.0
	Body			5.4

<1800>

Item				**INFORM**	**INTENSE**
				CY6A	
				SNSPL6	**STXPL6**
Vehicle dimension mm	Overall width		1	1,760	1,760
	Front track		2	1,530	1,530
	Overall length		3	4,570	4,570
	Front overhang		4	955	955
	Wheelbase		5	2,635	2,635
	Rear overhang		6	980	980
	Ground clearance (unladen)		7	140	150
	Overall height (unladen)		8	1,480	1,490
	Rear track		9	1,530	1,530
Vehicle weight kg	Kerb weight	Without optional parts		1,305	1,350
		With optional parts		1,336	1,388
	Max. gross vehicle weight			1,850	1,850
	Max. axle weight rating-front			990	990
	Max. axle weight rating-rear			930	930
Seating capacity				5	5
Engine	Model code			4J10	4J10
	Type			SOHC MIVEC <Low CO_2 specification>	SOHC MIVEC <Low CO_2 specification>
	Total displacement mL			1,798	1,798
Fuel system	Fuel supply system			MPI	MPI
Transmission	Model code			F5MBB	F1CJA
	Type			Front wheel drive 2WD, 5M/T	Front wheel drive 2WD, INVECS-III CVT with sport mode
Turning radius m	Wheel			5.0	5.0
	Body			5.4	5.4

Item				INTENSE
				CY6A
				SNXXL6
Vehicle dimension mm	Overall width		1	1,760
	Front track		2	1,530
	Overall length		3	4,570
	Front overhang		4	955
	Wheelbase		5	2,635
	Rear overhang		6	980
	Ground clearance (unladen)		7	150
	Overall height (unladen)		8	1,490
	Rear track		9	1,530
Vehicle weight kg	Kerb weight	Without optional parts		1,320
		With optional parts		1,358
	Max. gross vehicle weight			1,850
	Max. axle weight rating-front			990
	Max. axle weight rating-rear			930
Seating capacity				5
Engine	Model code			4J10
	Type			SOHC MIVEC <Low CO_2 specification>, Auto Stop & Go (AS&G) <Clear Tec AS&G>
	Total displacement mL			1,798
Fuel system	Fuel supply system			MPI
Transmission	Model code			F5MBB
	Type			Front wheel drive 2WD, 5M/T
Turning radius m	Wheel			5.0
	Body			5.4

Item				BASE	INFORM
				CY9A	
				SJLSL6	SJSSL6
Vehicle dimension mm	Overall width		1	1,760	1,760
	Front track		2	1,530	1,530
	Overall length		3	4,570	4,570
	Front overhang		4	955	955
	Wheelbase		5	2,635	2,635
	Rear overhang		6	980	980
	Ground clearance (unladen)		7	140	140
	Overall height (unladen)		8	1,480	1,480
	Rear track		9	1,530	1,530
Vehicle weight kg	Kerb weight	Without optional parts		1,365	1,415
		With optional parts		1,370	1,458
	Max. gross vehicle weight			1,940	1,940
	Max. axle weight rating-front			1,080	1,080
	Max. axle weight rating-rear			930	930
Seating capacity				5	5
Engine	Model code			4N13	4N13
	Type			DOHC MIVEC low-power diesel with intercooled turbocharger <Low CO_2 specification>, Auto Stop & Go (AS&G) <Clear Tec AS&G>	DOHC MIVEC low-power diesel with intercooled turbocharger, <Low CO_2 specification> Auto Stop & Go (AS&G) <Clear Tec AS&G>
	Total displacement mL			1,798	1,798
Fuel system	Fuel supply system			Common rail fuel injection	Common rail fuel injection
Transmission	Model code			F6MBA	F6MBA
	Type			Front wheel drive 2WD, 6M/T	Front wheel drive 2WD, 6M/T
Turning radius m	Wheel			5.0	5.0
	Body			5.4	5.4

VEHICLES FOR RUSSIA

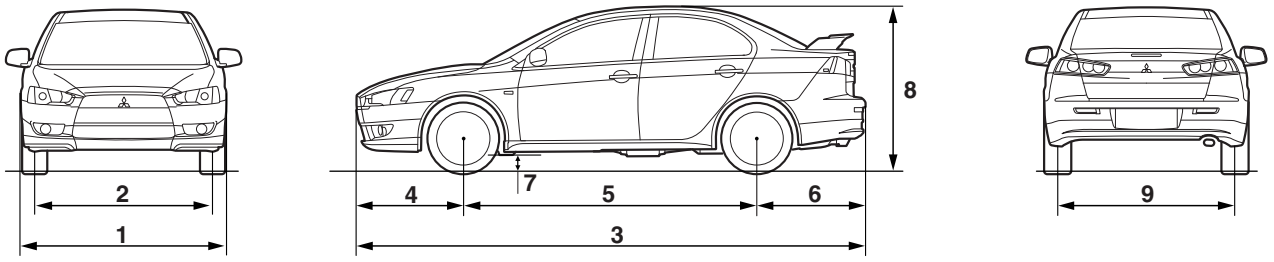

AC608677AB

<1600>

Item			INVITE/INFORT	
			CY1A	
			SNSHL6Z/SNLHL6Z	SRSHL6Z
Vehicle dimension mm	Overall width	1	1,760	1,760
	Front track	2	1,530	1,530
	Overall length	3	4,570	4,570
	Front overhang	4	955	955
	Wheelbase	5	2,635	2,635
	Rear overhang	6	980	980
	Ground clearance (unladen)	7	165	165
	Overall height (unladen)	8	1,505	1,505
	Rear track	9	1,530	1,530
Vehicle weight kg	Kerb weight	Without optional parts	1,260/1,255	1,280
		With optional parts	1,275/1,255	1,295
	Max. gross vehicle weight		1,750	1,750
	Max. axle weight rating-front		905	905
	Max. axle weight rating-rear		915	915
Seating capacity			5	5
Engine	Model code		4A92	4A92
	Type		DOHC MIVEC	DOHC MIVEC
	Total displacement mL		1,590	1,590
Fuel system	Fuel supply system		MPI	MPI
Transmission	Model code		F5M43	F4A4A
	Type		Front wheel drive 2WD, 5M/T	Front wheel drive 2WD, 4A/T
Turning radius m	Wheel		5.0	5.0
	Body		5.4	5.4

<1800>

Item				**INVITE**	
				CY3A	
				SNSHL6Z	**STSHL6Z**
Vehicle dimension mm	Overall width		1	1,760	1,760
	Front track		2	1,530	1,530
	Overall length		3	4,570	4,570
	Front overhang		4	955	955
	Wheelbase		5	2,635	2,635
	Rear overhang		6	980	980
	Ground clearance (unladen)		7	165	165
	Overall height (unladen)		8	1,505	1,505
	Rear track		9	1,530	1,530
Vehicle weight kg	Kerb weight	Without optional parts		1,300	1,330
		With optional parts		1,303	1,333
	Max. gross vehicle weight			1,850	1,850
	Max. axle weight rating-front			990	990
	Max. axle weight rating-rear			930	930
Seating capacity				5	5
Engine	Model code			4B10	4B10
	Type			DOHC MIVEC	DOHC MIVEC
	Total displacement mL			1,798	1,798
Fuel system	Fuel supply system			MPI	MPI
Transmission	Model code			F5MBB	F1CJA
	Type			Front wheel drive 2WD, 5M/T	Front wheel drive 2WD, INVECS-III CVT with sport mode
Turning radius m	Wheel			5.0	5.0
	Body			5.4	5.4

GENERAL DATA AND SPECIFICATIONS <LANCER SPORTBACK>

M1001000907753

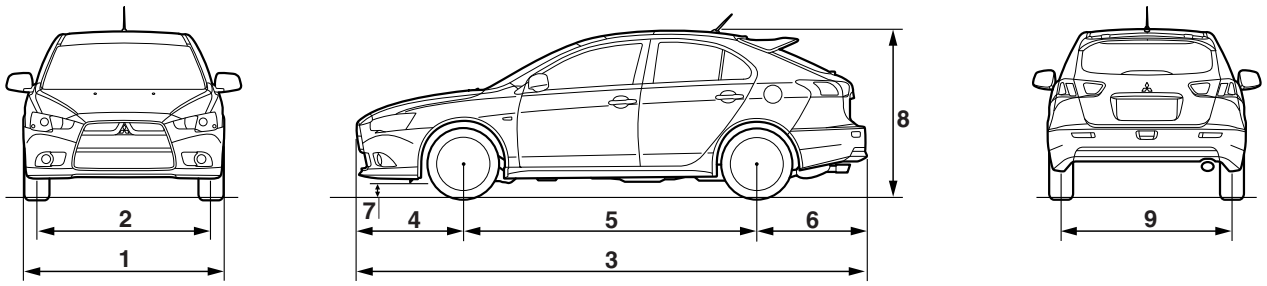

AC801921AB

<1600>

Item			INFORM	
			CX1A	
			LNSPL6	LNSXL6
Vehicle dimension mm	Overall width	1	1,760	1,760
	Front track	2	1,530	1,530
	Overall length	3	4,585	4,585
	Front overhang	4	955	955
	Wheelbase	5	2,635	2,635
	Rear overhang	6	995	995
	Ground clearance (unladen)	7	140	140
	Overall height (unladen)	8	1,505	1,505
	Rear track	9	1,530	1,530
Vehicle weight kg	Kerb weight	Without optional parts	1,300	1,300
		With optional parts	1,331	1,331
	Max. gross vehicle weight		1,800	1,800
	Max. axle weight rating-front		905	905
	Max. axle weight rating-rear		965	965
Seating capacity			5	5
Engine	Model code		4A92	4A92
	Type		DOHC MIVEC <Low CO_2 specification>	DOHC MIVEC <Low CO_2 specification>, Auto Stop & Go (AS&G) <Clear Tec AS&G>
	Total displacement mL		1,590	1,590
Fuel system	Fuel supply system		MPI	MPI
Transmission	Model code		F5M43	F5M43
	Type		Front wheel drive 2WD, 5M/T	Front wheel drive 2WD, 5M/T
Turning radius m	Wheel		5.0	5.0
	Body		5.4	5.4

<1800>

Item				**INFORM**	
				CX6A	
				LNSPL6	**LTSPL6**
Vehicle dimension mm	Overall width		1	1,760	1,760
	Front track		2	1,530	1,530
	Overall length		3	4,585	4,585
	Front overhang		4	955	955
	Wheelbase		5	2,635	2,635
	Rear overhang		6	995	995
	Ground clearance (unladen)		7	140	140
	Overall height (unladen)		8	1,505	1,505
	Rear track		9	1,530	1,530
Vehicle weight kg	Kerb weight	Without optional parts		1,345	1,375
		With optional parts		1,375	1,405
	Max. gross vehicle weight			1,900	1,900
	Max. axle weight rating-front			990	990
	Max. axle weight rating-rear			980	980
Seating capacity				5	5
Engine	Model code			4J10	4J10
	Type			SOHC MIVEC <Low CO_2 specification>	SOHC MIVEC <Low CO_2 specification>
	Total displacement mL			1,798	1,798
Fuel system	Fuel supply system			MPI	MPI
Transmission	Model code			F5MBB	F1CJA
	Type			Front wheel drive 2WD, 5M/T	Front wheel drive 2WD, INVECS-III CVT with sport mode
Turning radius m	Wheel			5.0	5.0
	Body			5.4	5.4

Item				INTENSE
				CX6A
				LNXXL6
Vehicle dimension mm	Overall width		1	1,760
	Front track		2	1,530
	Overall length		3	4,585
	Front overhang		4	955
	Wheelbase		5	2,635
	Rear overhang		6	995
	Ground clearance (unladen)		7	150
	Overall height (unladen)		8	1,515
	Rear track		9	1,530
Vehicle weight kg	Kerb weight	Without optional parts		1,360
		With optional parts		1,386
	Max. gross vehicle weight			1,900
	Max. axle weight rating-front			990
	Max. axle weight rating-rear			980
Seating capacity				5
Engine	Model code			4J10
	Type			SOHC MIVEC <Low CO_2 specification>, Auto Stop & Go (AS&G) <Clear Tec AS&G>
	Total displacement mL			1,798
Fuel system	Fuel supply system			MPI
Transmission	Model code			F5MBB
	Type			Front wheel drive 2WD, 5M/T
Turning radius m	Wheel			5.0
	Body			5.4

Item				BASE	
				CX9A	
				LJLXL6	LJLSL6
Vehicle dimension mm	Overall width		1	1,760	1,760
	Front track		2	1,530	1,530
	Overall length		3	4,585	4,585
	Front overhang		4	955	955
	Wheelbase		5	2,635	2,635
	Rear overhang		6	995	995
	Ground clearance (unladen)		7	140	140
	Overall height (unladen)		8	1,505	1,505
	Rear track		9	1,530	1,530
Vehicle weight kg	Kerb weight	Without optional parts		1,405	1,400
		With optional parts		1,410	1,405
	Max. gross vehicle weight			1,990	1,990
	Max. axle weight rating-front			1,080	1,080
	Max. axle weight rating-rear			980	980
Seating capacity				5	5
Engine	Model code			4N13	4N13
	Type			DOHC MIVEC with intercooled turbocharger <Low CO_2 specification>, Auto Stop & Go (AS&G) <Clear Tec AS&G>	DOHC MIVEC low-power diesel with intercooled turbocharger <Low CO_2 specification>, Auto Stop & Go (AS&G) <Clear Tec AS&G>
	Total displacement mL			1,798	1,798
Fuel system	Fuel supply system			Common rail fuel injection	Common rail fuel injection
Transmission	Model code			F6MBA	F6MBA
	Type			Front wheel drive 2WD, 6M/T	Front wheel drive 2WD, 6M/T
Turning radius m	Wheel			5.0	5.0
	Body			5.4	5.4

Item				INFORM	
				CX9A	
				LJSXL6	LJSSL6
Vehicle dimension mm	Overall width		1	1,760	1,760
	Front track		2	1,530	1,530
	Overall length		3	4,585	4,585
	Front overhang		4	955	955
	Wheelbase		5	2,635	2,635
	Rear overhang		6	995	995
	Ground clearance (unladen)		7	140	140
	Overall height (unladen)		8	1,505	1,505
	Rear track		9	1,530	1,530
Vehicle weight kg	Kerb weight	Without optional parts		1,460	1,455
		With optional parts		1,505	1,500
	Max. gross vehicle weight			1,990	1,990
	Max. axle weight rating-front			1,080	1,080
	Max. axle weight rating-rear			980	980
Seating capacity				5	5
Engine	Model code			4N13	4N13
	Type			DOHC MIVEC with intercooled turbocharger <Low CO_2 specification>, Auto Stop & Go (AS&G) <Clear Tec AS&G>	DOHC MIVEC low-power diesel with intercooled turbocharger <Low CO_2 specification>, Auto Stop & Go (AS&G) <Clear Tec AS&G>
	Total displacement mL			1,798	1,798
Fuel system	Fuel supply system			Common rail fuel injection	Common rail fuel injection
Transmission	Model code			F6MBA	F6MBA
	Type			Front wheel drive 2WD, 6M/T	Front wheel drive 2WD, 6M/T
Turning radius m	Wheel			5.0	5.0
	Body			5.4	5.4

NOTES

GROUP 13A

MULTIPOINT FUEL INJECTION (MPI) <4A9>

CONTENTS

GENERAL INFORMATION 13A-2

GENERAL INFORMATION

M1131000107014

OUTLINE OF CHANGES

The following change is made. The other service procedure are the same as the conventional ones.

- Engine-ECU is changed. <Vehicles for Europe>

GENERAL SPECIFICATIONS

Items		Specifications	
Engine-ECU	Identification No.	M/T	E6T78879 <Vehicles for Europe>
		A/T	E6T78880 <Vehicles for Europe>

GROUP 52B

SUPPLEMENTAL RESTRAINT SYSTEM (SRS)

CONTENTS

GENERAL INFORMATION . . . . . 52B-2 WARNING/CAUTION LABELS 52B-2

GENERAL INFORMATION

M1524000102918

OUTLINE OF CHANGE

The caution label, which is attached on the sunvisor, has been changed.

WARNING/CAUTION LABELS

M1524003002415

SUN VISOR



GROUP 55A

HEATER, AIR CONDITIONER AND VENTILATION

CONTENTS

GENERAL INFORMATION 55A-2
COMPRESSOR ASSEMBLY 55A-3
DISASSEMBLY AND REASSEMBLY <4N1> 55A-3

GENERAL INFORMATION

M1551000101050

OUTLINE OF CHANGE

Due to the following changes, the service procedure has been established.

- Now the A/C control panel is common to RHD and LHD (The panel designed exclusively for RHD has been discontinued).
- Due to the use of QS70 compressor, the service procedure has been established.<4N1>

<MANUAL A/C>

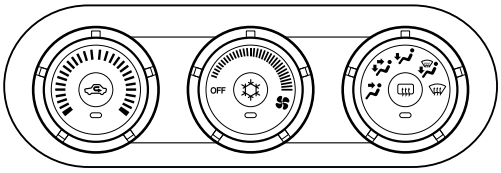

<AUTOMATIC A/C (RUSSIA)>

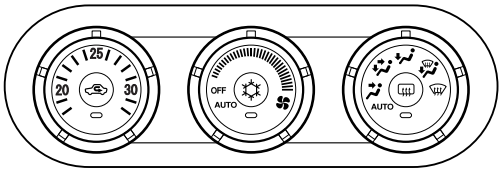

<AUTOMATIC A/C (EUROPE)>

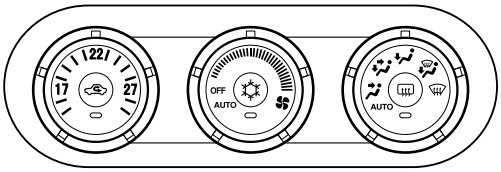

ACC06810AC

COMPRESSOR ASSEMBLY

DISASSEMBLY AND REASSEMBLY <4N1>

M1552004603733

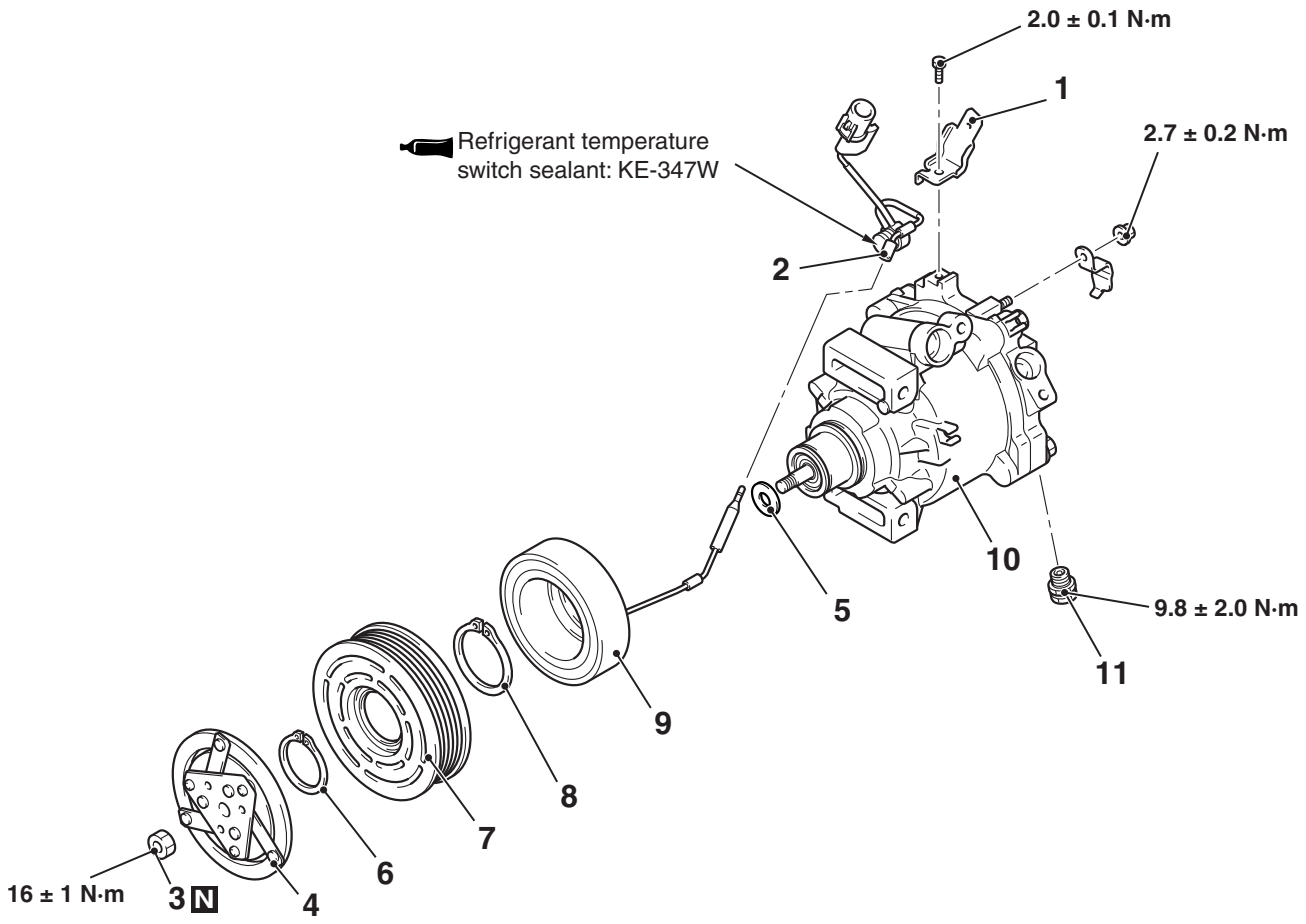

ACB01638AD

Refrigerant temperature switch disassembly steps

1. Bracket
2. Refrigerant temperature switch

A/C compressor clutch disassembly steps

>>F<< • Air gap adjustment
<<A>> >>E<< 3. Self-locking nut
4. Armature
5. Shim
>>D<< 6. Snap ring
<<B>> >>C<< 7. Rotor
8. Snap ring
>>B<< 9. A/C compressor coil
10. A/C compressor
>>A<< 11. A/C compressor high pressure relief valve

DISASSEMBLY SERVICE POINTS

<<A>> SELF-LOCKING NUT REMOVAL

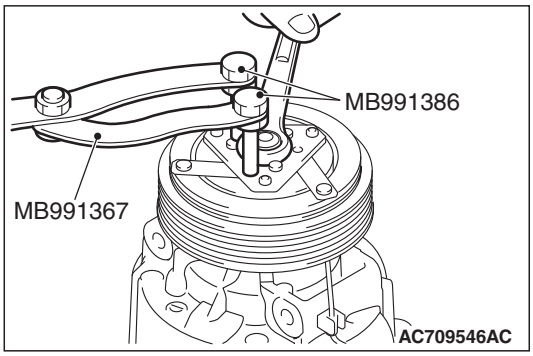

Use the special tools below to remove the self-locking nut.

- Special spanner (MB991367)
- Pin (MB991386)

<<B>> ROTOR REMOVAL

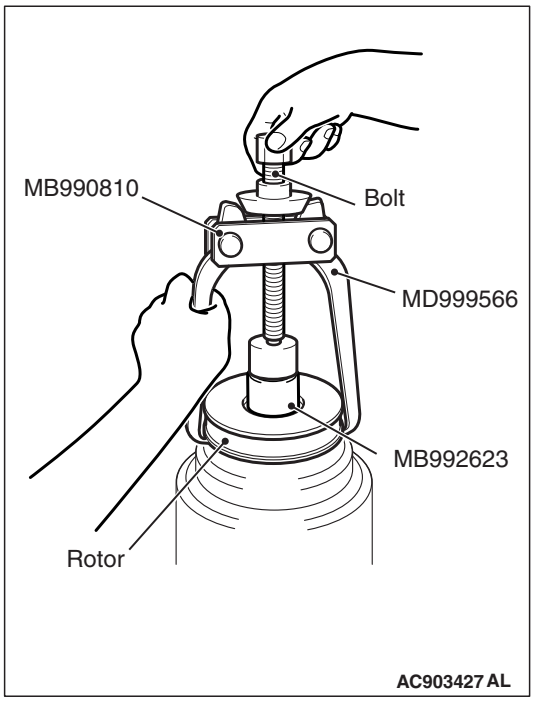

⚠ CAUTION

- **Be sure to use the guide (MB992623) when the side bearing puller (MB990810) is used to prevent the damage of A/C compressor.**
- **If the threaded shaft of side bearing puller (MB990810) is turned than necessary, the rotor may be distorted. Therefore, turn the threaded shaft lightly only by hand without using any tools.**

Rotor can be removed by hand, but if it is difficult to remove it, use the guide (MB992623) and the side bearing puller (MB990810) as shown.

REASSEMBLY SERVICE POINTS

>>A<< A/C COMPRESSOR HIGH PRESSURE RELIEF VALVE INSTALLATION

⚠ CAUTION

Be careful not to damage the O-ring when installing the high-pressure relief valve. Apply the specified compressor oil the high-pressure relief valve mounting hole before installation

Check that O-ring is installed to the high-pressure relief and use the adjust torque wrench to install the high-pressure relief valve to the main body of the compressor.

>>B<< A/C COMPRESSOR COIL ATTACHMENT

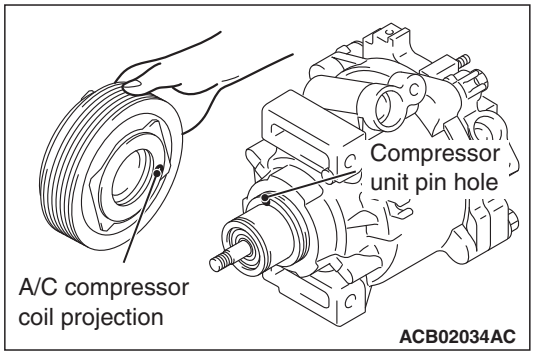

Line up the pin hole on the compressor unit with the A/C compressor coil projection and attach.

>>C<< ROTOR INSTALLATION

⚠ CAUTION

If the outer wheel side of rotor is pushed, an abnormal noise can be generated because the inside of rotor is damaged, therefore, always push the inner wheel side.

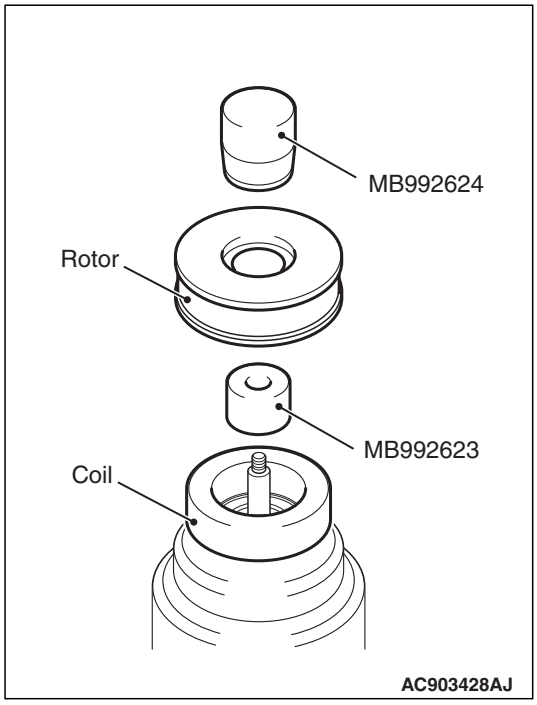

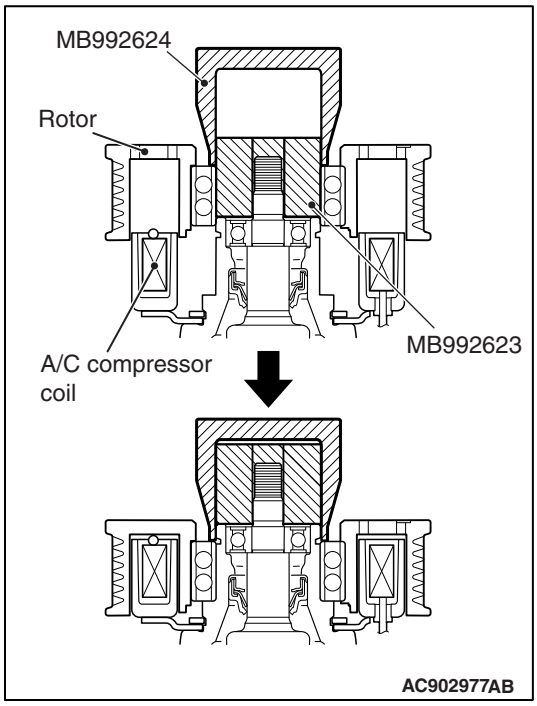

Install the rotor while pushing the inner wheel side slowly using the pusher (MB992624) and guide (MB992623).

NOTE: Insert the rotor in a direction perpendicular to the A/C compressor.

>>D<< SNAP RING INSTALLATION

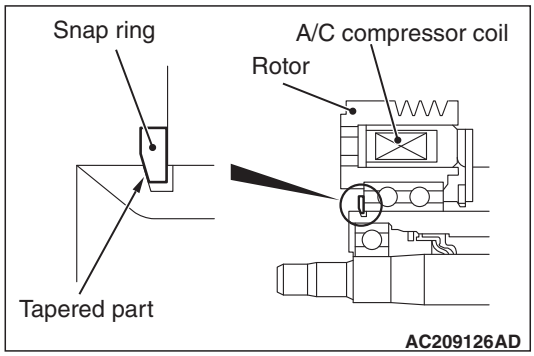

Using snap ring pliers, fit the snap ring so that the snap ring's tapered part is on the outside.

>>E<< SELF-LOCKING NUT INSTALLATION

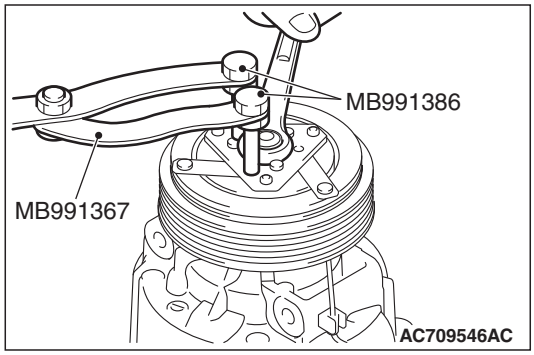

Using a special tool, as when removing the nut, secure the armature and tighten the self-locking nut.

>>F<< AIR GAP ADJUSTMENT

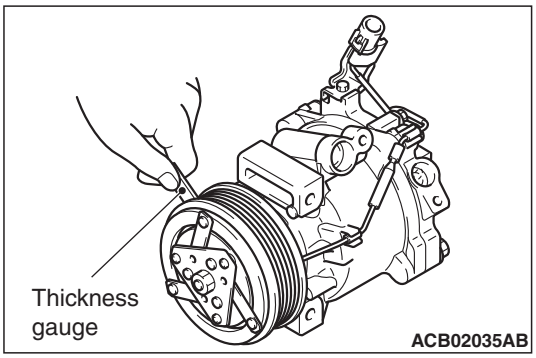

Check whether or not the air gap of the clutch is within the standard value.

Standard value:
0.25 – 0.45 mm

NOTE: If there is a deviation of the air gap from the standard value, make the necessary adjustment by adjusting the number of shims.

NOTES

GROUP 0

GENERAL

CONTENTS

HOW TO USE THIS MANUAL 0-2

PRECAUTIONS BEFORE SERVICE 0-2

- PROTECTING THE VEHICLE 0-2
- DOING SERVICE WORK IN GROUPS OF TWO OR MORE MECHANICS 0-2
- REMOVAL AND DISASSEMBLY 0-2
- SPECIAL TOOLS 0-3
- PARTS TO BE REPLACED 0-3
- PARTS 0-3
- TUBES AND OTHER RUBBER PARTS . . . 0-3
- LUBRICANTS 0-3
- BRAKE FLUID 0-4
- SERVICING THE ELECTRICAL SYSTEM 0-4
- APPLICATION OF ANTI-CORROSION AGENTS AND UNDERCOATS 0-4
- PRE-INSPECTION CONDITION 0-4
- VEHICLE WASHING 0-4
- MULTI USE TESTER (M.U.T.-III) SUB ASSEMBLY 0-5
- IN ORDER TO PREVENT VEHICLES FROM FIRE 0-5
- ENGINE OILS 0-5

HOW TO USE THIS MANUAL

M6000000100026

This manual contains Pre-delivery inspection and Periodic inspection and maintenance.

Group 0 and 1 have the contents for all vehicle models, and Group 2 has contents for the relevant vehicle models.

PRECAUTIONS BEFORE SERVICE

PROTECTING THE VEHICLE

M6001000100029

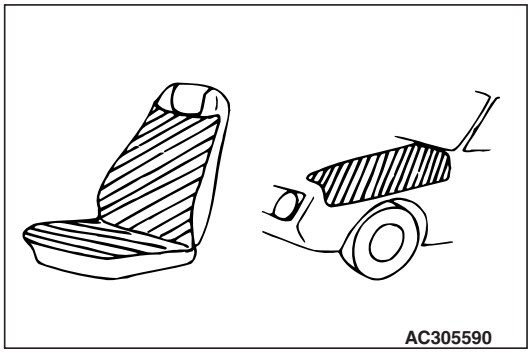

If there is a likelihood of damaging interior or exterior parts during service operations, protect them with suitable covers (such as seat covers, fender covers, etc.).

DOING SERVICE WORK IN GROUPS OF TWO OR MORE MECHANICS

M6001000200026

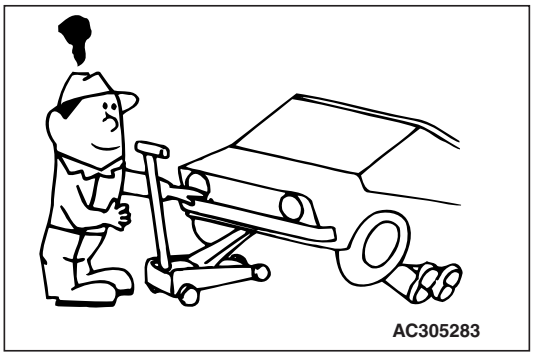

If the service work is to be done by two or more mechanics working together, all the mechanics involved should take safety into consideration while they work.

REMOVAL AND DISASSEMBLY

M6001000300023



When checking a malfunction, find the cause of the problem. If it is determined that removal and/or disassembly is necessary, perform the work by following the procedures contained in this manual.

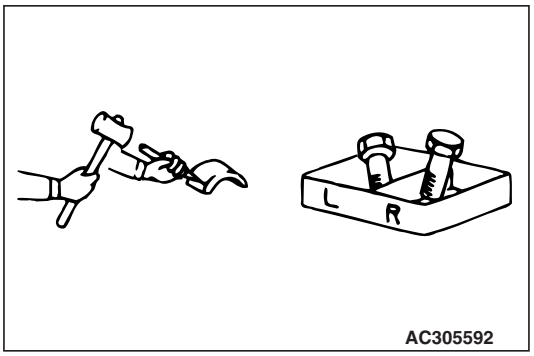

If punch marks or mating marks are made to avoid error in assembly and facilitate the assembly work, be sure to make them in locations which will have no detrimental effect on performance and/or appearance. If an area having many parts, similar parts, and/or parts which are symmetrical right and left is disassembled, be sure to arrange the parts so that they do not become mixed during the assembly process.

1. Arrange the parts removed in the proper order.
2. Determine which parts are to be reused and which are to be replaced.
3. If bolts, nuts, etc., are to be replaced, be sure to use only the exact size specified.

SPECIAL TOOLS

M6001000400031

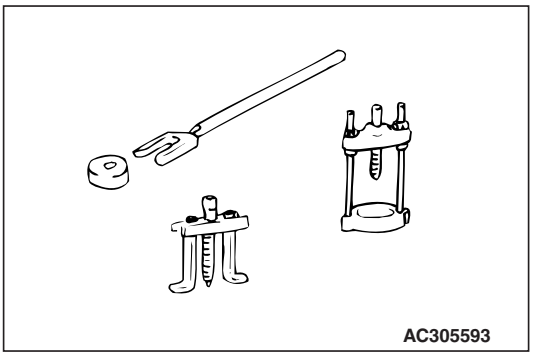

If other tools are substituted for the special tools to do service of repair work, there is the danger that vehicle parts might be damaged, or the technician might be injured; therefore, be sure to use the special tool whenever doing any work for which the use of one is specified.

PARTS TO BE REPLACED

M6001000500027

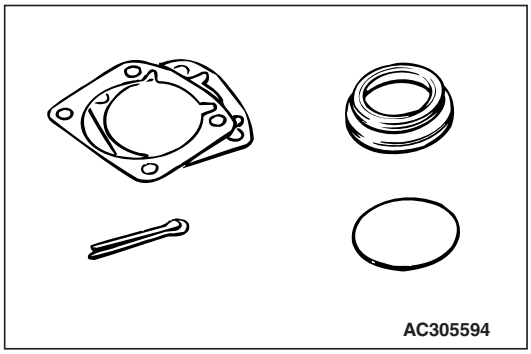

If any of the following parts are removed, they must be replaced with new parts.

- Oil seals
- Gaskets (except rocker cover gasket)
- Packings
- O-rings
- Lock washers
- Split pins
- Self-locking nuts

PARTS

M6001000600024

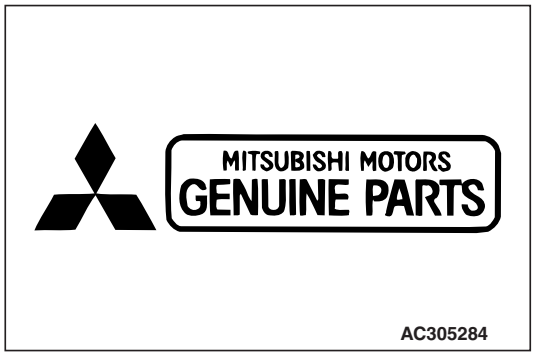

When replacing parts, use MITSUBISHI genuine parts.

TUBES AND OTHER RUBBER PARTS

M6001000700021

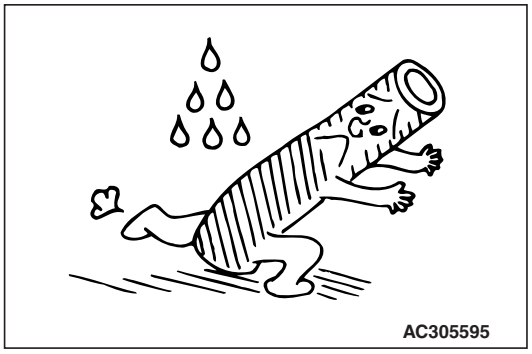

Be careful to avoid spilling any petrol, oil, etc., because if it adheres to any tubes or other rubber parts, they might be adversely affected.

LUBRICANTS

M6001000800028

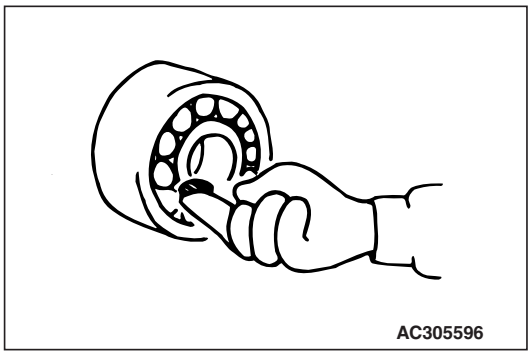

In accordance with the instructions in this manual, apply the specified lubricants in the specified locations during assembly and installation.

BRAKE FLUID

M6001000900025

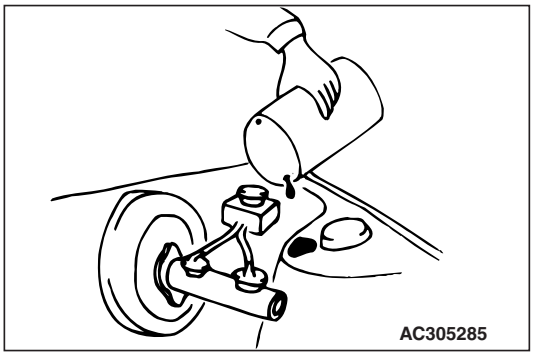

Be careful to avoid spilling any brake fluid, because if it adheres to the vehicle body, the paint coat might be discoloured.

SERVICING THE ELECTRICAL SYSTEM

M6001001000081

⚠ CAUTION

Before connecting or disconnecting the negative (-) cable, be sure to turn off the ignition switch and the lighting switch. (If this is not done, there is the possibility of semiconductor parts being damaged.)

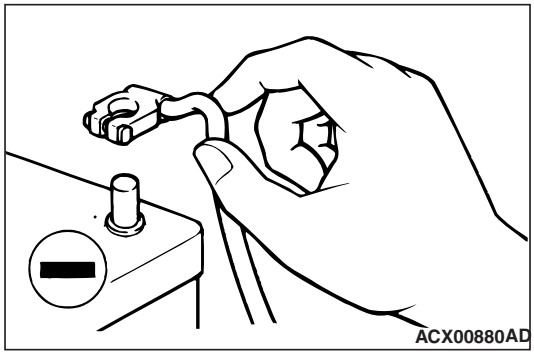

Before replacing a component related to the electrical system and before undertaking any repair procedures involving the electrical system, be sure to first disconnect the negative (-) cable from the battery in order to avoid damage caused by short-circuiting.

APPLICATION OF ANTI-CORROSION AGENTS AND UNDERCOATS

M6001001100022

If oil or grease gets onto the oxygen sensor, it will cause a drop in the performance of the sensor. Cover the oxygen sensor with a protective cover when applying anti-corrosion agents and undercoats.

PRE-INSPECTION CONDITION

M6001001200148

"Pre-inspection condition" refers to the condition that the vehicle must be in before proper engine inspection can be carried out. If you see the words "Set the vehicle to the pre-inspection condition". In this manual, it means to set the vehicle to the following condition.

- Engine coolant temperature: 80 to 90°C
- Lamps, electric cooling fan and all accessories: OFF
- M/T: Neutral
- A/T, CVT: P range

VEHICLE WASHING

M6001001300082

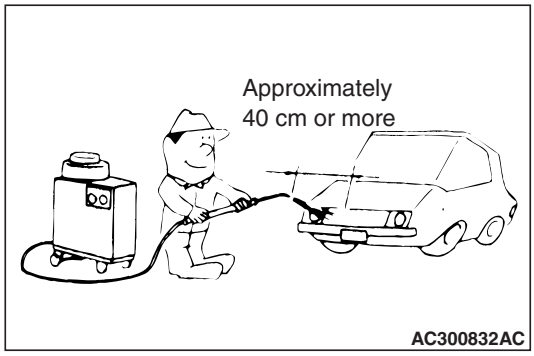

If high-pressure car-washing equipment or steam car-washing equipment is used to wash the vehicle, be sure to note the following information in order to avoid damage to plastic components, etc.

- Spray nozzle distance: Approximately 40 cm or more
- Spray pressure: 3,900 kPa or less
- Spray temperature: 82°C or less
- Time of concentrated spray to one point: within 30 sec.

MULTI USE TESTER (M.U.T.-III) SUB ASSEMBLY

M6001001900169

Refer to the "M.U.T.-III OPERATING INSTRUCTIONS" for instructions on handling the M.U.T.-III.

⚠ CAUTION

Turn the ignition switch to the LOCK (OFF) position before connecting or disconnecting the M.U.T.-III.

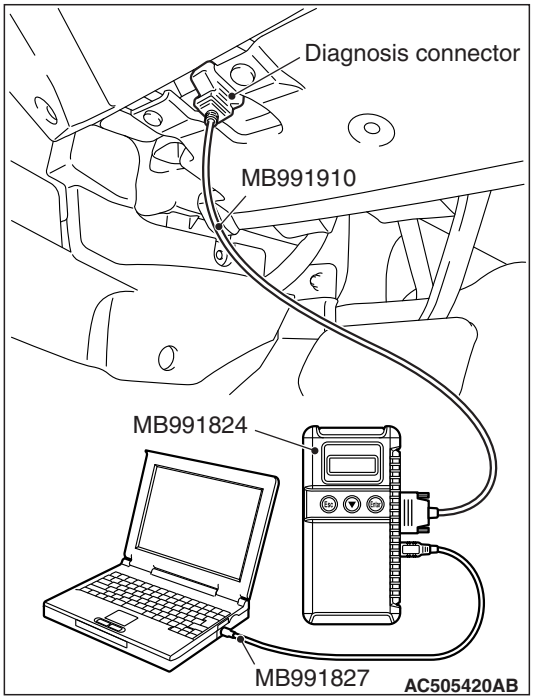

Connect the M.U.T.-III to the diagnosis connector as shown in the illustration.

IN ORDER TO PREVENT VEHICLES FROM FIRE

M6001001500064

"Improper installation of electrical or fuel related parts could cause a fire. In order to retain the high quality and safety of the vehicle, it is important that any accessories that may be fitted or modifications/repairs that may be carried out which involve the electrical or fuel systems, must be carried out in accordance with MMC's information/Instructions".

ENGINE OILS

M6001001600191

HEALTH WARNING

Prolonged and repeated contact with mineral oil will result in the removal of natural fats from the skin, leading to dryness, irritation and dermatitis. In addition, used engine oil contains potentially harmful contaminants which may cause skin cancer. Adequate means of skin protection and washing facilities must be provided.

RECOMMENDED PRECAUTIONS

The most effective precaution is to adapt working practices which prevent, as far as practicable, the risk of skin contact with mineral oils, for example by using enclosed systems for handling used engine oil and by degreasing components, where practicable, before handling them.

Other precautions:

- Avoid prolonged and repeated contact with oils, particularly used engine oils.
- Wear protective clothing, including impervious gloves where practicable.
- Avoid contaminating clothes, particularly underpants, with oil.
- Do not put oily rags in pockets, the use of overalls without pockets will avoid this.
- Do not wear heavily soiled clothing and oil-impregnated foot-wear. Overalls must be cleaned regularly and kept separately from personal clothing.
- Where there is a risk of eye contact, eye protection should be worn, for example, chemical goggles or face shields; in addition an eye wash facility should be provided.
- Obtain first aid treatment immediately for open cuts and wounds.
- Wash regularly with soap and water to ensure all oil is removed, especially before meals (skin cleansers and nail brushes will help). After cleaning, the application of preparations containing lanolin to replace the natural skin oils is advised.
- Do not use petrol, kerosine, diesel fuel, gas oil, thinners or solvents for cleaning skin.
- Use barrier creams, applying them before each work period, to help the removal of oil from the skin after work.
- If skin disorders develop, obtain medical advice without delay.

NOTES

GROUP 1

PRE-DELIVERY INSPECTION

CONTENTS

NOTES CONCERNING ENTRIES . . . 1-3

PAINTWORK TERMS 1-5

FIRST STEP 1-6

1. CONNECTION OF DARK CURRENT CONNECTOR 1-6

BODY 1-6

2. WRAP FILM 1-6
3. EXTERIOR 1-11
4. OPERATION OF DOOR LOCKING SYSTEMS AND DOOR HINGES 1-11
5. OPERATION OF DOOR MIRRORS, WINDOWS AND SUNROOF 1-11

UNDER HOOD 1-12

6. ENGINE OIL LEVEL 1-12
7. BRAKE MASTER CYLINDER FLUID LEVEL 1-12
8. CLUTCH MASTER CYLINDER FLUID LEVEL 1-12
9. WASHER FLUID LEVEL. 1-12
10. BATTERY CONDITION AND CONNECTIONS 1-12
11. POWER STEERING FLUID LEVEL . . . 1-13
12. ELECTRICAL WIRING 1-13

UNDER VEHICLE 1-13

13. TYRE AND SPARE TYRE PRESSURES 1-13
14. SUSPENSION SYSTEM 1-13
15. STEERING LINKAGE AND SPLIT PINS 1-14
16. UNDER BODY. 1-14

BEFORE ROAD TEST 1-15

17. SEAT ADJUSTERS AND SEATBACK LATCHES 1-15
18. INHIBITOR SWITCH 1-15
19. IDLE CONTROL KNOB. 1-15
20. INSTRUMENT PANEL CONTROLS . . . 1-15
21. METERS, GAUGES, WARNING LAMPS AND INDICATION LAMPS 1-15
22. AIR CONDITIONER, HEATER AND DEFROSTER SYSTEM. 1-15
23. WIPERS AND WASHERS. 1-16
24. OPERATION OF SERVICE BRAKES AND PARKING BRAKES 1-16
25. CLUTCH OPERATION 1-16
26. OPERATION OF SEAT BELTS, SHOULDER BELTS AND RETRACTORS 1-17

Continued on next page

ROAD TEST 1-17
27. ENGINE PERFORMANCE AND EXHAUST GAS. 1-17
28. TRANSMISSION IN ALL RANGES. . . . 1-17
29. BRAKES 1-18
30. STEERING CONTROL 1-18
31. VIBRATION AND RATTLES 1-18
32. ELECTRICAL EQUIPMENT 1-18

AFTER ROAD TEST 1-19
33. IDLE SPEED 1-19
34. IGNITION TIMING. 1-19
35. RADIATOR COOLANT LEVEL 1-19
36. HOSES, FLUID LINES AND CONNECTIONS LOCATED UNDER HOOD 1-19
37. MANUAL TRANSMISSION AND TRANSFER (4WD) OIL LEVEL 1-19
38. AUTOMATIC TRANSMISSION FLUID LEVEL 1-20
39. ENGINE, TRANSMISSION, STEERING GEAR BOX AND DIFFERENTIAL FOR LEAKS 1-20
40. FRONT AND REAR DIFFERENTIAL OIL LEVELS 1-20
41. HOSES, FLUID LINES AND CONNECTIONS LOCATED UNDER VEHICLE 1-20

FINAL STEPS 1-21
42. HEADLAMP AIMING 1-21
43. EQUIPMENT 1-21
44. EXTERIOR AND INTERIOR 1-21
45. OWNER INSTRUCTIONS. 1-21

NOTES CONCERNING ENTRIES

M6010100100132

This section describes the details and the inspection methods employed for the pre-delivery inspection of vehicles.
The inspection should be conducted according to the sequence described in the TABLE OF PRE-DELIVERY INSPECTION.
Inspection methods are described following the TABLE OF PRE-DELIVERY INSPECTION.

NOTE: The spaces for model, C/# (Chassis number), E/# (engine number), aggregate distance travelled in kilometres (miles), date of inspection, name of person conducting the inspection, and body colour must be completed without fail.

NOTE: The spaces for place of inspection, and name of owner should be completed as required.

TABLE OF PRE-DELIVERY INSPECTION

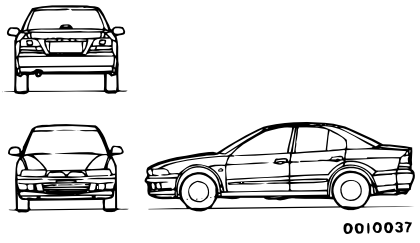

Model	
Chassis number	
Engine number	
Distance Travelled	km
Owner	
Date of inspection	
Place of inspection	
Inspector	
Body colour	

Symbols to be used					
√	Good	A	Needs adjustment	T	Needs retightening
C	Needs cleaning	L	Needs replenishment of lubricant, water, etc.	X	Needs replenishment of repair

INSPECTION PROCEDURE

First Step

1. ☐ Connection of the dark current connector

Body

2. ☐ Wrap film
3. ☐ Exterior
4. ☐ Operation of door locking systems and door hinges
5. ☐ Operation of door mirrors, windows and sunroof

Under Hood

6. ☐ Engine oil level
7. ☐ Brake master cylinder fluid level
8. ☐ Clutch master cylinder fluid level
9. ☐ Washer fluid level
10. ☐ Battery condition and connections
11. ☐ Power steering fluid level
12. ☐ Electrical wiring

Under Vehicle

13. ☐ Tyre and spare tyre pressures
14. ☐ Suspension system
15. ☐ Steering linkage and split pins
16. ☐ Under body

Before Road Test

17. ☐ Seat adjusters and seat back latches
18. ☐ Choke system and inhibitor switch
19. ☐ Idle control knob
20. ☐ Instrument panel controls
21. ☐ Meters, gauges, warning lamps and indication lamps
22. ☐ Air conditioning, heater and defroster systems
23. ☐ Wipers and washers
24. ☐ Operation of service brakes and parking brakes
25. ☐ Clutch operation
26. ☐ Operation of seat belts, shoulder belts and retractors

Road Test

27. ☐ Engine performance and exhaust gas
28. ☐ Transmission in all ranges
29. ☐ Brakes
30. ☐ Steering control
31. ☐ Vibration and rattles
32. ☐ Electrical equipment

After Road Test

33. ☐ Idle speed
34. ☐ Ignition timing
35. ☐ Radiator coolant level
36. ☐ Hoses, fluid lines and connections located under hood
37. ☐ Manual transmission and transfer (4WD) oil level
38. ☐ Automatic transmission fluid level
39. ☐ Engine, transmission, steering gear box and differential for leaks
40. ☐ Front and rear differential oil levels
41. ☐ Hoses, fluid lines and connections located under vehicle

Final Steps

42. ☐ Headlamp aiming
43. ☐ Equipment
44. ☐ Exterior and interior
45. ☐ Owner instructions

AC401525

PAINTWORK TERMS

M6010200100098

Term	Definition	Remark
Blister	A raised bubble in the paint (from the base or the undercoat) caused by abnormal moisture. The bubble may contain either water or air.	
Change in tone	The colour tone of the painted surface is not uniform.	Including wrong colour, discoloration and decolouration.
Contact mark	A mark on the painted surface as a result of contact by hands or clothing at the time of paint application.	
Crack	A crack in the painted surface.	Cracks may be either shallow or deep.
Dirt in paintwork	Rough surface resulting from foreign material in the paint or from dust deposited on wet paint during painting or storage.	
Filed or ground traces	Deep scratches in sheet metal surface, resulting from improper use of buffer or sander, are not completely covered, and are visible through paint coating.	
Orange peel	The painted surface has the appearance of an orange peel.	
Peeling	The paint flakes off (partly or over a wide area).	The peeling may be minor, medium, or major.
Pin holes	Tiny holes in the painted surface.	
Runs	A visible trickle of dried paint on the surface.	Either undercoat or top-coat.
Scratches	Scratches on the painted surface.	
Shrink	The painted surface "shrinks", causing wrinkles.	
Smears	Spots of soot or other material deposited on the painted surface.	Including stains and water spots.
Spray mist	The painted surface includes fine particles of other paint.	
Uneven lustre	The lustre of the painted surface is not uniform.	
Uneven metallic dispersion	The metallic dispersion of the painted surface is not uniform.	
Visibly incomplete topcoating	A part of the undercoating visible.	

FIRST STEP

1. CONNECTION OF DARK CURRENT CONNECTOR

M6010300100374

CONNECTING PROCEDURE

⚠ CAUTION

Turn the ignition switch to the LOCK (OFF) position before connecting storage connector.

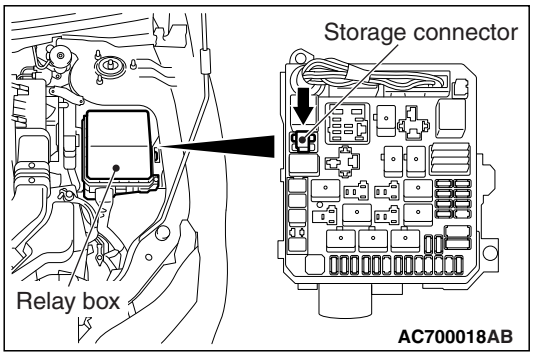

Press down the storage connector.

BODY

2. WRAP FILM

M6010400100241

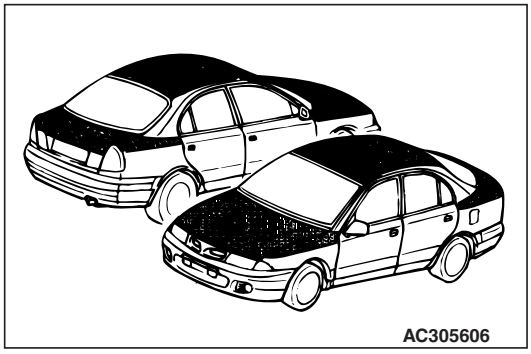

Vehicles may be shipped from the assembly plant to the distributors with a white plastic film or coating (wrap film) applied for the purpose of protecting the painted exterior from environmental elements where the assembly plant and point of embarkation is located.

Distributors are required to remove the wrap film immediately after receiving vehicles, which is necessary for PDI operations. Please refer to the following chart for the procedures.

REMOVAL PROCEDURE

Flow Chart of Wrap Film Removal

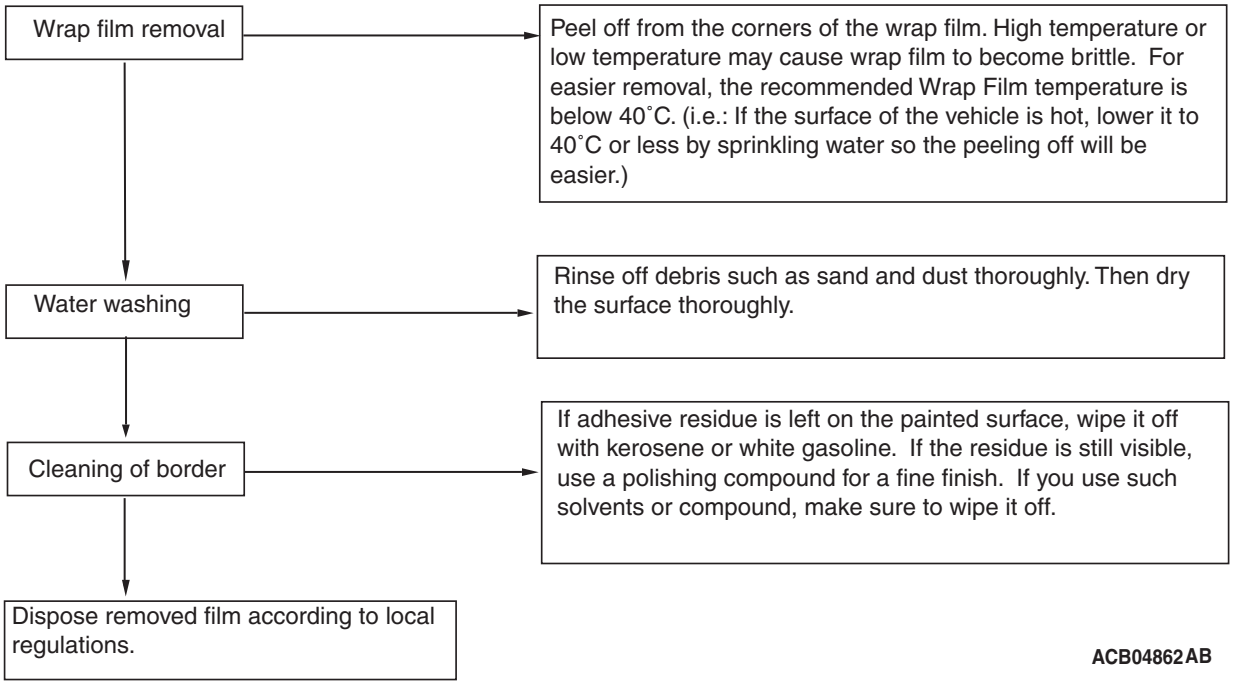

The procedures to re-apply the wrap film

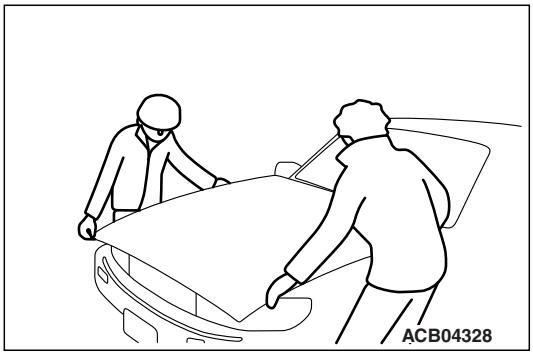

If there is an environment that the vehicles in stock may be exposed to elements such as acid rain, dust particles, it may be recommendable to re-apply the wrap film for the purpose of protecting the painted exterior from the environment. Please refer to the following chart for the procedures to re-apply the wrap film.

Steps.	Process	Tips
1	Remove old wrap film	Follow the "flow chart of removing the wrap film"
2	Prepare the surface to adhere the wrap film	Make sure there is no debris such as sand or dust. Dry the surface thoroughly. The temperature of the area to apply the wrap film should be below 40°C for workability.
3	Re-apply the wrap film	The area to re-apply the wrap film is the same area where the original wrap film was applied. 1. Begin adhering the wrap film from the low part of the vehicle and move upward. Maintain some tension on the wrap film so it will not get wrinkled or trap air bubbles. Although air bubbles it self will not damage the paint, you can avoid trapping air by adhering the wrap film from the centre to the out side of the vehicle. Use a tool such as a squeezer to adhere the wrap film firmly to the vehicle. 2. For moving panels such as the hood and trunk lid, or portion where parts such as windshield washer nozzles are pointing out, cut the wrap film accordingly, so it will adhere to the paint surface firmly. 3. If the top side of the film (the side without the adhesive) is left to contact the painted surface, it may damage the paint surface. (for example, become lusterless). The edges of the wrap film and overlapping portions should be firmly adhered to prevent entry of rain under the wrap film. 4. To prevent colour difference to be recognised between the areas wrapped and unwrapped due to exposure to sunlight etc. during storage, we recommend the boundary of wrapped and unwrapped areas be on a vertical location.

⚠ CAUTION

- **Be careful not to damage the paint surface while cutting the wrap film.**
- **Once the wrap film is adhered to the vehicle, it should remain on the vehicle for no more than 6 months. If it is necessary, a new wrap film should be adhered to the vehicle following the steps above, based on your inventory management schedule.**

Guidelines to give you an estimate of the labour costs

Approximate labour time to adhere wrap film

area to apply wrap film (m^2)	labour time (min)
3.5 - 5.5	10 - 15
5.5 - 7.0	15 - 20

How to acquire the wrap film

It will be a direct transaction between O-WELL. Fill the necessary information, contact information;*1 and ordering quantity;*2 in the specified portion of the document attached below and send to O-WELL Corporation. The necessary information is stated in the document attached below. O-WELL will give you a quotation in return.

Owell
FINE RELATIONS FOR NEXT

*1 Quotation request No. ____

Date _____

from

name of company

_____

address

_____

Tel; _____

Fax; _____

a person in charge

_____

e-mail address

_____

To

O-WELL CORPORATION

3-6-17, Kitashinagawa, Shinagawa-ku,
Tokyo 140-0001 Japan
Phone:81-3-6812-8607
Telefax:81-3-6812-8614
E-Mail:y-honda@owell.co.jp
o-kagami@owell.co.jp
n-kosaka@owell.co.jp

please quote us as follows;

Conditions

(1) Payment; All amount (100%) should be paid by T/T remittance in advance is required.
Our banking information;
The bank of Tokyo Mitsubishi UFJ, Ltd Kamata Branch
5-12-6 kamata, Ota-Ku, Tokyo 144-0052 Japan
SWIFT; BOTKJPJT, Account # 117-1059643
Accountee; O-WELL Corporation

(2) Delivery; By DHL or any other way by air.
Lead time to delivery; within 10 working days
Expected delivery by;_____ to (air-port)_____

(3) Trade Term; CPT(C&F) destination air-port in US Dollar

(4) Validity of quotation; by the end of next month

(5) Manufacturer and Specification;
Kansai Paint Co., Ltd. Japan
RAPGARD-F (Guard Film) with adhesive, thickness 45 micron polyolefin resin over 90%

Description	Required quantity	Unit Price	Amount
	(Cartons)		CPT US Dollar
Width; _____ Length; _____			
Delivery charges			
Country of origin; Japan			
Customs Tariff No. 3919.90 Self-adhesive film	(1)		
Total;G.W.(kg) cartons			

O-WELL Corporation

ACB04863

RAPGARD-F; Ordering information

Width mm	Length Meter	Weight per roll Kg	Quantity per carton rolls	Carton		*2 Ordering quantity carton
				Dimension W x D x H mm	Weight kg	
50	100	0.3	48	390x347x325	16.2	
70	100	0.4	32	390x347x325	13.5	
100	100	0.6	24	390x347x325	16.2	
150	100	0.8	16	380x337x305	14.8	
200	100	1.1	8	380x337x205	9.4	
250	100	1.4	8	380x337x255	11.8	
300	100	1.7	8	380x337x305	14.3	
600	100	3.3	4	1300x265x135	14.8	
720	100	4.0	2	740x250x125	9.5	
900	200	8.9	1	940x160x160	10.4	
1100	200	10.8	1	1140x160x160	12.3	
1200	200	11.8	1	1240x160x160	13.3	
1300	200	12.8	1	1340x160x160	13.9	

Film Thickness (micron);

film 35 μ + adhessive10 μ = Total 45 μ (43g/M2)

				*2
RAPGARD Cutter	10 pcs/ctn	230x120x10	75 g/pcs	
Squeezer	10 pcs/ctn	400x250x80	150 g/pcs	

Attention;

1) Distributors have to fill in

2) O-WELL to fill out in

ACB04864

3. EXTERIOR

M6010400200282

1. Visually inspect the entire exterior.
   (1) Paint condition
   (2) Corrosion, scratches
   (3) Bent edges, dented panels
2. Coated surfaces maintenance
   Touch up minor paint chips and flaws.
   (Refer to paintwork terms)

4. OPERATION OF DOOR LOCKING SYSTEMS AND DOOR HINGES

M6010400300137

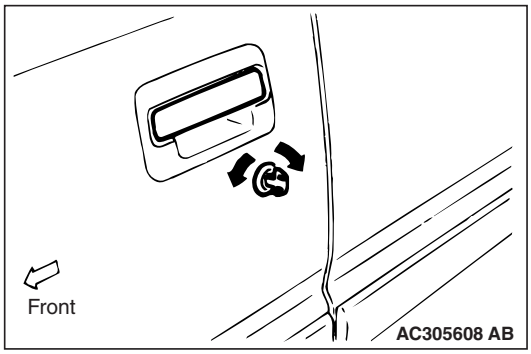

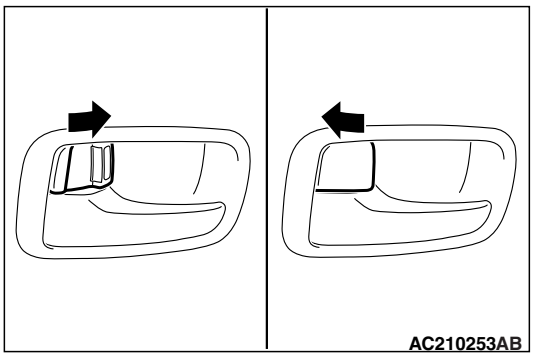

1. Open each door to check the release mechanism and ease of operation.
2. Close the door to check the latch and striker.
3. Open the door, operate the lock lever and close the door to check the lock.
4. Partially close the door to check the open-door detent.
5. Unlock each door with the key to check lock operation.
6. Verify that all doors can be locked by the lock buttons.

NOTE: Adjust and lubricate the door latches, strikers and locks as required.

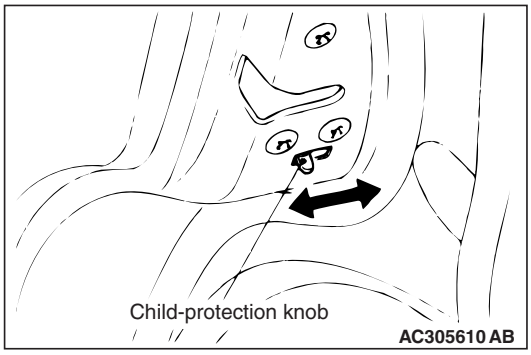

7. Verify that the rear doors can't be opened by the inner door handle when the child protection knob at the end of the door is shifted to the "LOCK" position with the inside lock plunger raised.

NOTE: Set the lock to the "FREE" position on child protection of both rear doors. (For four door models)

5. OPERATION OF DOOR MIRRORS, WINDOWS AND SUNROOF

M6010400400178

1. Door mirrors

   Check that the mirror operate properly.
2. Door windows

   Close all door windows to the fully closed position to check ease of operation.
3. Power windows

   Check that the door windows operate when the respective switches are operated. Check that when the lock switches are depressed, the respective door windows can no more be opened or closed.
4. Slide window

   Close the slide window to the fully closed position to check operation.
5. Sunroof

   Close the sunroof to the fully closed position to check operation.

UNDER HOOD

6. ENGINE OIL LEVEL

M6010500100282

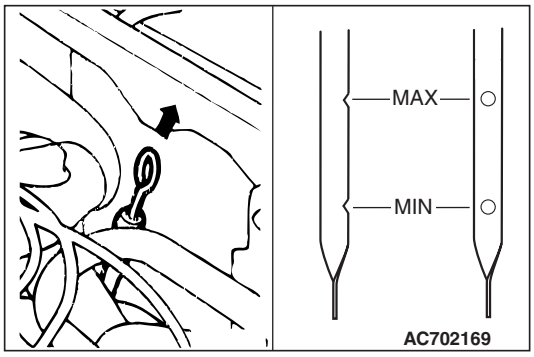

Check that the oil level is between "MAX" and "MIN".
If it is at or below "MIN", add the necessary amount of the specified engine oil referring to GROUP 2, Periodic Inspection and Maintenance.

7. BRAKE MASTER CYLINDER FLUID LEVEL

M6010500200115

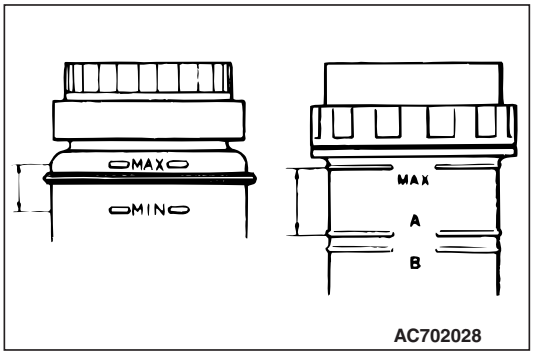

Check the fluid level.
If it is below the "MIN" mark, replenish fresh brake fluid up to the "MAX" mark.

Specified Brake Fluid: DOT3 or DOT4

8. CLUTCH MASTER CYLINDER FLUID LEVEL

M6010500300026

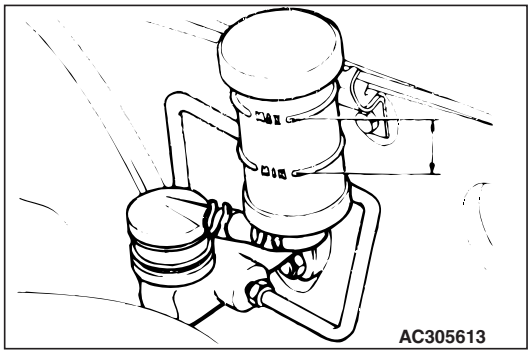

Check the fluid level.
If it is below the "MIN" mark, replenish fresh brake fluid up to the "MAX" mark.

Specified Brake Fluid: DOT3 or DOT4

9. WASHER FLUID LEVEL

M6010500400078

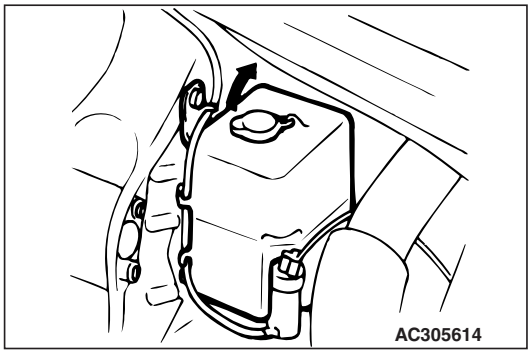

Check the fluid level; if it is low, replenish the washer fluid.

1. Windshield washer reservoir
2. Rear window washer reservoir

10. BATTERY CONDITION AND CONNECTIONS

M6010500500042

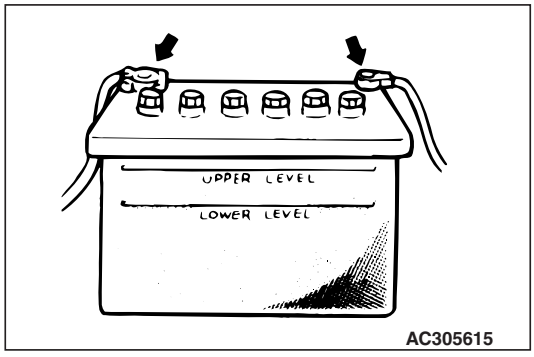

Inspect the battery connections. Verify that they are tightened.

NOTE: Do not wipe the lubricant from the battery posts and cable clamps.

11. POWER STEERING FLUID LEVEL

M6010500600072

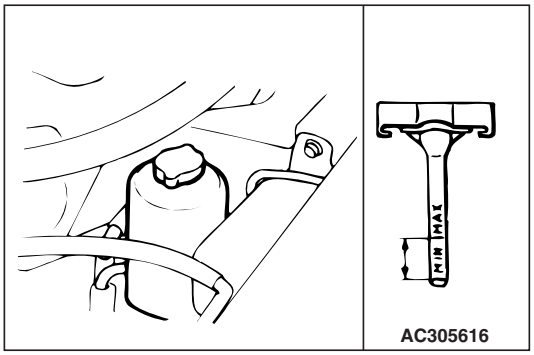

1. Check that the fluid level is between "MAX" and "MIN".
2. If the fluid is added, start the engine and turn the steering wheel from stop to stop several times to expel air from the system.

   Specified gear oil: Automatic transmission fluid DEXRON III or DEXRON II

12. ELECTRICAL WIRING

M6010500700024

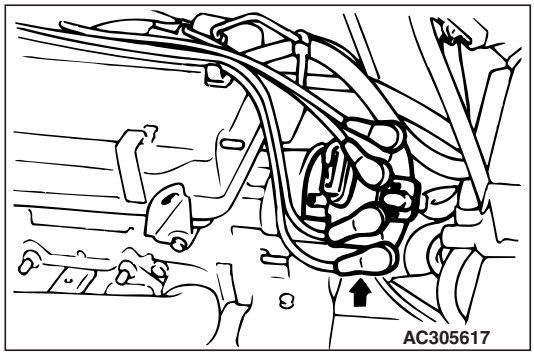

1. Each electrical wiring harness and connector
   (1) Check each harness to be correctly routed and securely clipped.
   (2) Confirm that all connections are tight.
2. Ignition cable
   Be sure that all ignition cables are firmly attached to the spark plugs, distributor cap (or crank angle sensor) and ignition coil.

UNDER VEHICLE

13. TYRE AND SPARE TYRE PRESSURES

M6010600100041

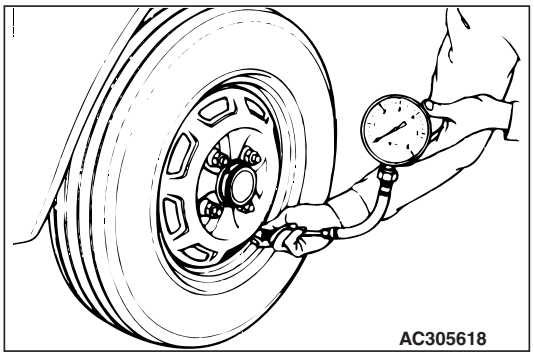

1. Tyre specification
   Check the correct tyre specification.
2. Tyre pressures
   Adjust each tyre pressure.

   NOTE: Recommended pressure is shown on the tyre pressure label.
3. Valve stem extensions
   Verify that the valve stem extensions are installed where necessary.
4. Install the wheel covers, wheel rings and hub caps.

14. SUSPENSION SYSTEM

M6010600200167

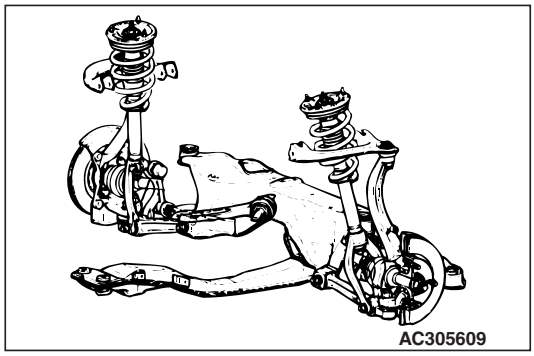

Check to be sure that each installation bolt and nut is tightened. If split pins are used, make sure that they are properly installed.

1. Lower arm, Upper arm
2. Stabilizer bar
3. Strut assembly

REMOVE FRONT SPRING RESTRAINTS

⚠ CAUTION

It is very important that these restraints must be removed during pre-delivery inspection. Failure to do so could cause ride and handling complaints.

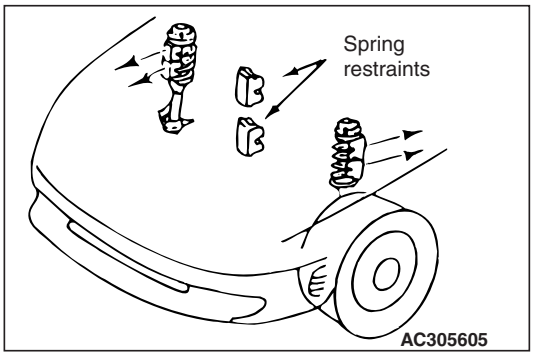

With the vehicle correctly positioned on the sub-frame contact points, and the suspension fully extended, remove the rubber restraints from the front springs.

15. STEERING LINKAGE AND SPLIT PINS

M6010600300023

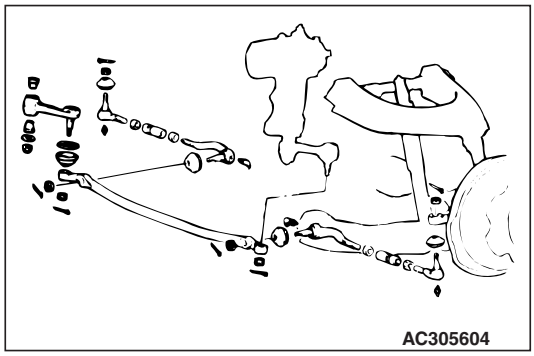

1. Steering linkage retaining nuts and split pins
   Check visually and by feel that the steering linkage retaining nuts are correctly tightened and the split pins are correctly installed.
2. Tie rods and relay rod
   Check that the tie rods and relay rod of the steering linkage are not bent and that the tie rod end lock nuts are securely tightened.
3. Steering components
   (1) Check that each of the steering components is tightened.
   (2) Check the tie rod end, nuts and split pins for proper installation.
   (3) Check the condition of bellows-type dust seals.
4. Split pins
   Check the front axle nuts and rear wheel spindle nuts for split pins.

16. UNDER BODY

M6010600400020

Check under body and under body coating for damage.

BEFORE ROAD TEST

17. SEAT ADJUSTERS AND SEATBACK LATCHES

M6010700100082

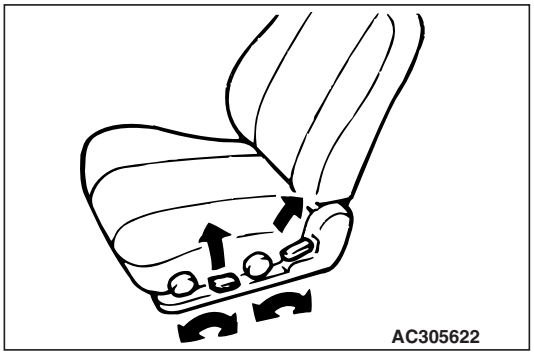

Check the operation of the various parts of the seats.

1. Mechanical adjusters of the seats
2. Operation of the latch for tilting the seatbacks forward and backward.

18. INHIBITOR SWITCH

M6010701100029

On models with an automatic transmission, be sure the engine starts in both "P" and "N" position, and does not start in other positions.

19. IDLE CONTROL KNOB

M6010700300020

Verify that the diesel engine revolution increases when the idle control knob is pulled out.

20. INSTRUMENT PANEL CONTROLS

M6010700400083

Check the operation of the following

1. Horn
2. Headlamps
3. Exterior and interior lamps
4. Instrument panel lamps
5. Instrument brightness control

21. METERS, GAUGES, WARNING LAMPS AND INDICATION LAMPS

M6010700500024

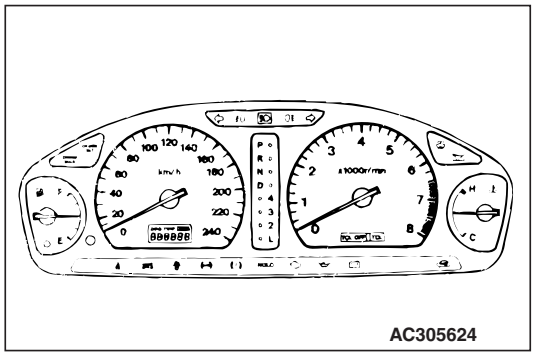

1. Check the meters and gauges are functioning properly.
2. Check each indicator lamp and warning lamp functions properly.

22. AIR CONDITIONER, HEATER AND DEFROSTER SYSTEM

M6010700600117

Check the systems for proper operation.

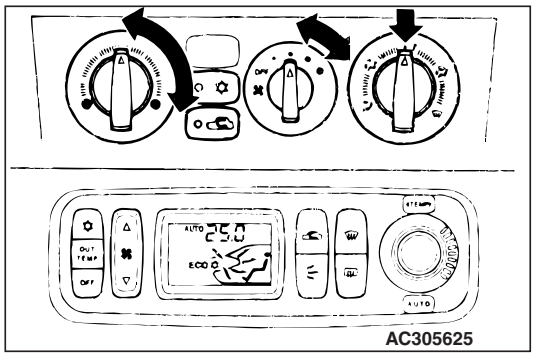

1. Air conditioner
   (1) Operate the air conditioner system.
   (2) Operate the air conditioner light.
   (3) Operate the control lever in all ranges.
   (4) Operate the blower motor switch in all ranges.

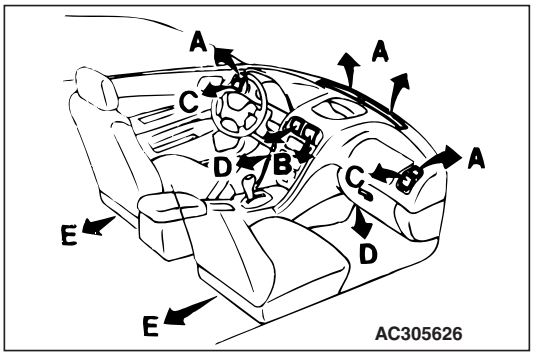

2. Heater and defroster
   (1) After the engine has warmed up, turn on the heater.
   (2) Operate the blower motor switch in all ranges.
   (3) Move the control to "Defrost" position.
      A: From front and side defroster
      B: From centre ventilators
      C: From side ventilators
      D: From under the instrument panel
      E: From under the front seat (some models only)

23. WIPERS AND WASHERS

M6010700700028

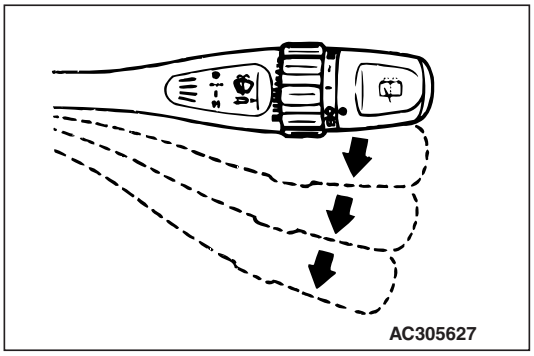

1. Front wiper and washer
   (1) Check operation of the front wipers in all ranges.
   (2) Check the aim of the front washer stream.
   (3) Check the wiper blade-stop positions.
   (4) Verify that the interval between cycles of wiping is shifted when timer knob is turned to any position.
   (5) Verify that the front wipers function by operating the washer switch.
2. Rear wiper and washer
   (1) Check the operation of the rear wiper.
   (2) Check the aim of the rear washer stream.
   (3) Check the wiper blade-stop positions.

24. OPERATION OF SERVICE BRAKES AND PARKING BRAKES

M6010700800371

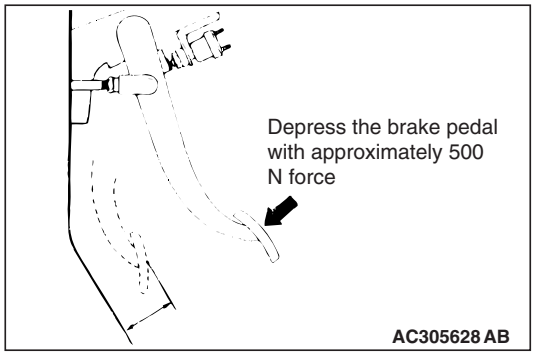

1. Service brakes
   (1) Check the clearance between the brake pedal and the floorboard when the brake pedal is depressed.

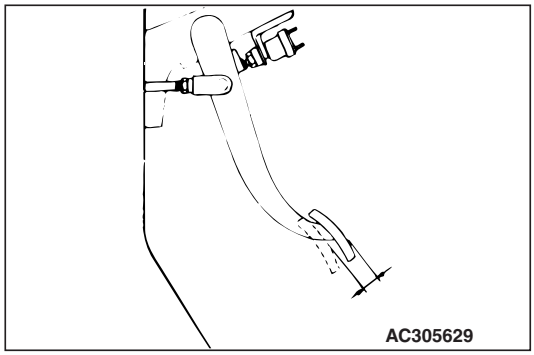

   (2) Verify correct brake pedal free play.

   NOTE: For inspection and adjustment of the service brake, refer to GROUP 2, Periodic Inspection and Maintenance.
2. Parking brake
   Check the parking brake drag and lever travel.

   NOTE: For inspection and adjustment of the parking brake, refer to GROUP 2, Periodic Inspection and Maintenance.

25. CLUTCH OPERATION

M6010700900282

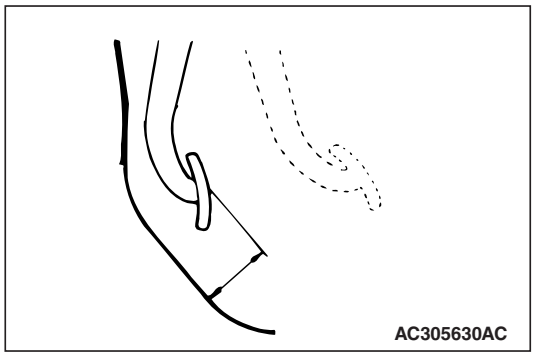

1. Check the clutch operation in all driving ranges.

2. Check the pedal to floorboard clearance when the clutch is just disengaged.

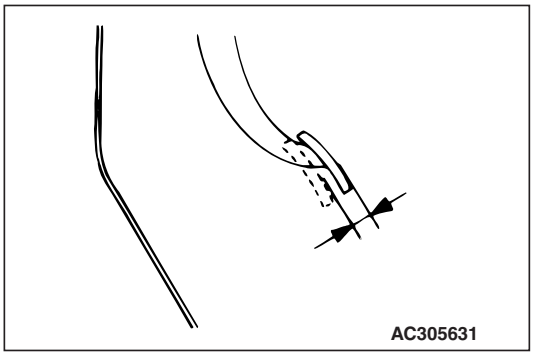

3. Verify correct clutch pedal free play.

   NOTE: For inspection and adjustment of the clutch pedal, refer to GROUP 2, Periodic Inspection and Maintenance.

26. OPERATION OF SEAT BELTS, SHOULDER BELTS AND RETRACTORS

M6010701000022

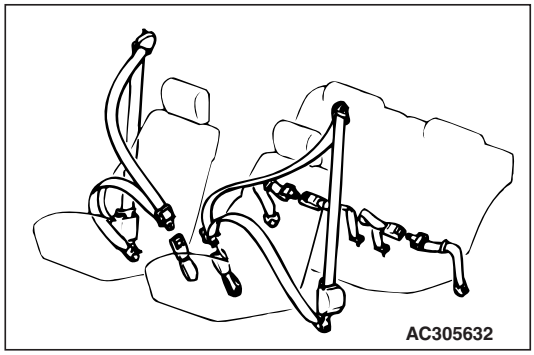

1. Verify that the seat belt warning lamp operates properly.
2. Check all seat belts and harnesses to assure that they connect and hold properly.
3. Lean forward to check that the shoulder harnesses allow movement.
4. Check the condition of the belts and anchors.
5. Check for proper seat belt retraction.

ROAD TEST

27. ENGINE PERFORMANCE AND EXHAUST GAS

M6010800100023

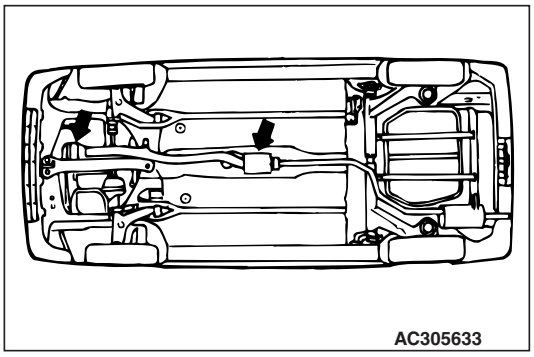

1. Engine performance
   Check the engine for proper performance and accelerator pedal for smooth operation.
2. Exhaust system
   (1) Check the exhaust system components for gas leaks.
   (2) Verify that no black smoking is emitted from the end of the exhaust pipe (diesel-powered vehicles).

28. TRANSMISSION IN ALL RANGES

M6010800200020

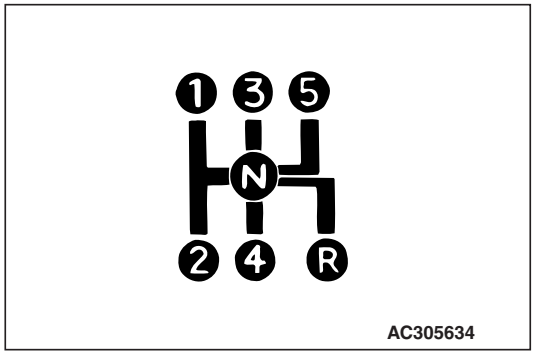

1. Manual transmission
   Check the transmission in all forward ranges and in reverse.

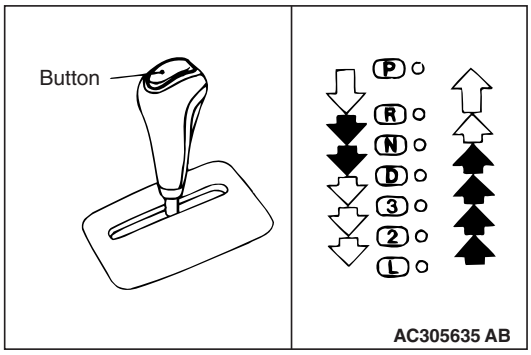

2. Automatic transmission
   (1) Make sure shift indicator lines up properly in all ranges.
   (2) Depress the accelerator completely to check that the manual kickdown is operating correctly.
   (3) Stop the vehicle on a steep incline.
   Put the automatic transmission in "P" position and slowly release the service brakes to see if "P" position lock holds. If it does not hold, the transmission requires further service.

29. BRAKES

M6010800300027

1. Service Brake
   Put the vehicle in gear and apply the brakes while the vehicle is in motion. Be sure brake operation is smooth and positive.
2. Parking Brake
   (1) Stop the vehicle on a steep incline.
   With the service brakes firmly applied, place the transmission in "N" position, and set the parking brakes.
   (2) Slowly release the service brakes to see if the parking brakes will hold.

30. STEERING CONTROL

M6010800400024

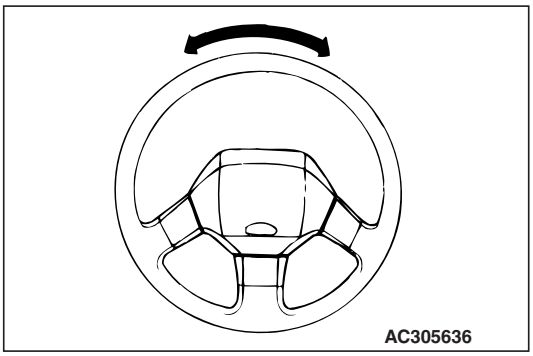

1. Check for excessive play or looseness.
2. Check the steering wheel centre.

31. VIBRATION AND RATTLES

M6010800500021

1. Locate squeaks, rattles and unusual vibrations.
2. Verify that no noise occurs from the engine, transmission, axle and body.

32. ELECTRICAL EQUIPMENT

M6010800600028

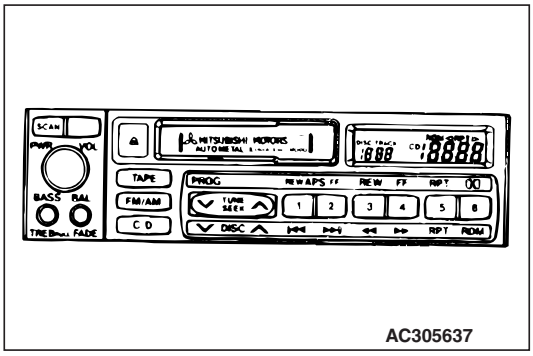

1. Radio

   Tune the radio to a local broadcasting station and check the following:
   (1) Operate the volume, tone, balance and fader controls, etc.
   (2) Pull out the pushbuttons, dial another station and set each pushbuttons.
   (3) Operate the AM/FM switch.
2. Tape player

   Insert a cassette tape in the tape player and check as follows:
   (1) Check the operation of the tape feeder and rewind.
   (2) Check the ejection.
   (3) Check the operation of volume, tone, balance and fader controls, etc.

AFTER ROAD TEST

33. IDLE SPEED

M6010900100172

Check the engine idle speed.

NOTE: For specific idle speed adjustment procedure, refer to GROUP 2, Periodic Inspection and Maintenance.

34. IGNITION TIMING

M6010900200179

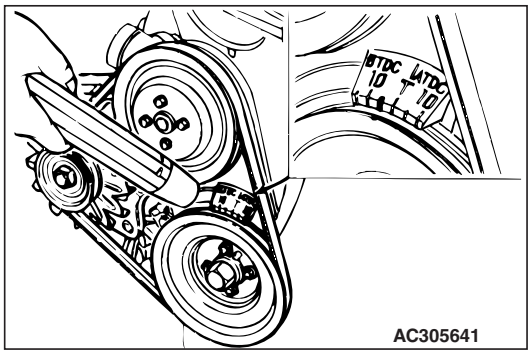

Check the ignition timing. Except MPI vehicles with crankshaft-mounted crankshaft angle sensor.

NOTE: For the inspection and adjustment of the ignition timing, refer to GROUP 2, Periodic Inspection and Maintenance.

35. RADIATOR COOLANT LEVEL

M6010900300154

⚠ CAUTION

Do not remove the radiator cap while the cooling system is under pressure.
When removing the radiator cap, be careful of steam and boiling water. Add coolant only to the reserve tank if it is required.

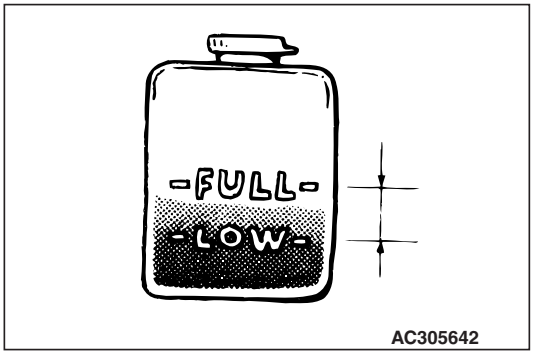

1. Check that the coolant level in the reserve tank is at or above "LOW" mark at normal engine operating temperature. And check cooling system for leaks.
2. Check that the coolant concentration is 30% to 60%.

36. HOSES, FLUID LINES AND CONNECTIONS LOCATED UNDER HOOD

M6010900400203

⚠ CAUTION

Remember that the air conditioner system is under pressure.

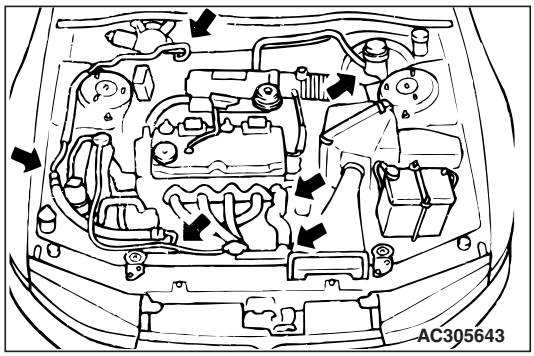

1. Check all brake, fuel, power steering and air conditioner lines and connections; verify proper routing, check connections for leaks, tighten loose connector as required.
2. Inspect routing and connections of all vacuum, and radiator and heater houses.

   NOTE: Keep in mind that an oily residue around an air conditioner connector does not necessarily indicate a leak. Oil is used to lubricate fittings during assembly. Be sure lines are not twisted or kinked.

37. MANUAL TRANSMISSION AND TRANSFER (4WD) OIL LEVEL

M6010900500211

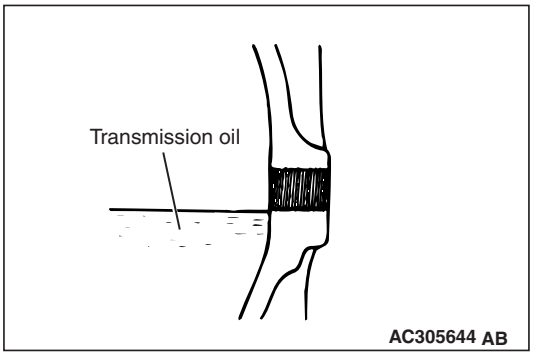

1. Remove the filler plug.
2. Check the oil level. If the oil level is at or slightly below the filler hole, it is in satisfactory condition.
3. If the level is low, replenish the transmission and transfer case with fresh oil by using a lubricator.

   NOTE: For the specified oil, refer to GROUP 2, Periodic Inspection and Maintenance.

38. AUTOMATIC TRANSMISSION FLUID LEVEL

M6010900600230

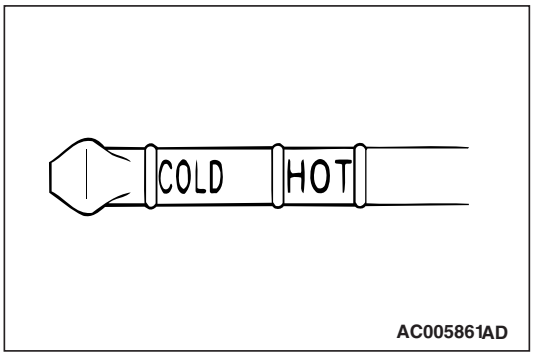

1. Remove the dipstick and check the fluid level.
2. Fluid level is okay if it is in the specified range as illustration at normal engine operating temperature.
3. If the level is below the lower notch, replenish fluid until the level reaches the upper notch.

   NOTE: For the specified automatic transmission fluid, refer to GROUP 2, Periodic Inspection and Maintenance.

39. ENGINE, TRANSMISSION, STEERING GEAR BOX AND DIFFERENTIAL FOR LEAKS

M6010900700055

Check the engine, transmission, steering gear box and differential for oil leaks.

40. FRONT AND REAR DIFFERENTIAL OIL LEVELS

M6010900800331

1. Remove the filler plug.
2. Check the oil level. If the oil level is at or slightly below the filler hole, it is in satisfactory condition.

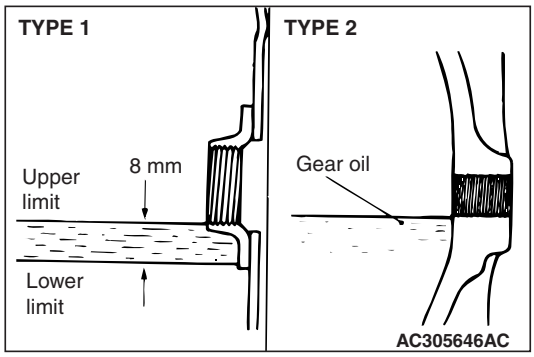

Type 1 only: Remove the filler plug, and check the gear oil level. Check that gear oil level is not 8 mm below the bottom of filler plug hole.

3. If the level is low, replenish the front and/or rear differential with fresh oil by using a lubricator.

   NOTE: For the specified oil, refer to GROUP 2, Periodic Inspection and Maintenance.

41. HOSES, FLUID LINES AND CONNECTIONS LOCATED UNDER VEHICLE

M6010901000145

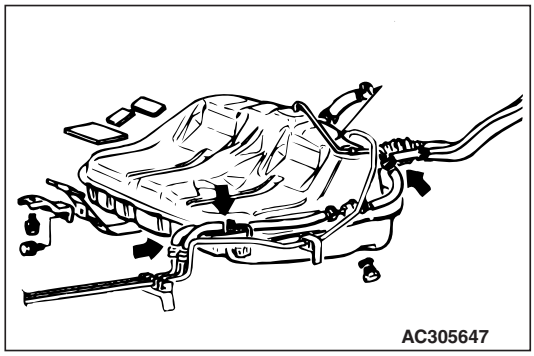

1. Check all hoses, fluid lines and connections for leaks.
2. Check all hoses and fluid lines for proper routing away from sharp edges and moving components.

FINAL STEPS

42. HEADLAMP AIMING

M6011000100116

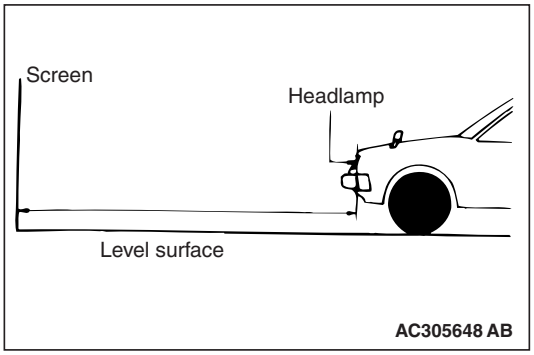

Check condition for headlamp aiming.

NOTE: For headlamp aiming procedures, refer to the Workshop Manual for that model.

43. EQUIPMENT

M6011000200191

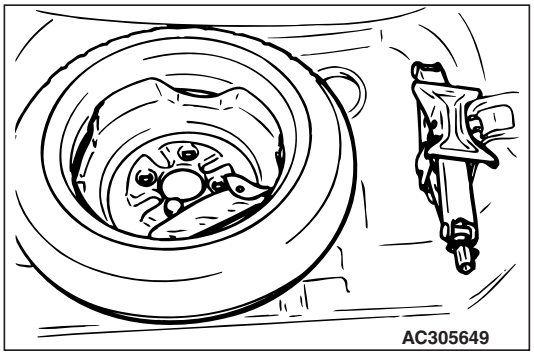

Check the installation of the various equipment.

1. Trunk room floor mats
2. Spare tyre
3. Jack, jack handle and tool set

44. EXTERIOR AND INTERIOR

M6011000300240

Finally check and clean the exterior and interior.

1. Wash the vehicle to remove all traces of road grime and other dirt on the vehicle as a result of new vehicle preparations.
2. Clean exterior and interior glass surface.
3. Remove all protective covers.
4. Remove undercoat overspray, excess window sealer, and excess weatherstrip adhesive.
5. Verify that the secondary key can not unlock the glove box and tailgate/boot lid (if so equipped).
6. Remove shipping and inspection stickers.

45. OWNER INSTRUCTIONS

M6011000400054

1. Verify that the owner's manual and service booklet is in the glove box.
2. Place the spare keys in envelope in the glove box before delivery.

NOTES

GROUP 2

PERIODIC INSPECTION AND MAINTENANCE

CONTENTS

PERIODIC INSPECTION AND MAINTENANCE SCHEDULE 2-3

OPERATIONS INSIDE THE ENGINE COMPARTMENT. 2-8

A1. CHECK DRIVE BELT FOR CRACKS, FRAYING, WEAR, AND ADJUST ITS TENSION 2-8

A2. CHECK INTAKE AIR HOSE FOR DAMAGE (vehicles with a turbocharger) . . 2-14

A3. REPLACE SPARK PLUGS. 2-15

A4. CHECK VALVE CLEARANCE (except vehicles with auto-lash adjuster) . . 2-15

A5. CHECK RADIATOR HOSES FOR DAMAGE AND PROPER CONNECTION. . 2-23

A6. CHECK ENGINE COOLANT LEVEL IN RESERVOIR 2-24

A7. CHANGE ENGINE COOLANT 2-24

A8. CHECK AIR CLEANER ELEMENT FOR CLOGGING AND DAMAGE. 2-27

A9. REPLACE AIR CLEANER ELEMENT 2-27

A10. CHECK FLUID LEVEL IN BRAKE RESERVOIR AND CLUTCH RESERVOIR 2-27

A11. CHANGE BRAKE FLUID 2-27

A12. CHECK BATTERY CONDITION 2-28

A13. REPLACE FUEL FILTER 2-29

OPERATIONS UNDER THE VEHICLE. 2-32

B1. CHECK SUSPENSION SYSTEM FOR DAMAGE AND LOOSENESS. 2-32

B2. CHECK SUSPENSION ARM BALL JOINTS FOR PLAY, AND DUST COVERS FOR DAMAGE 2-33

B3. CHECK DRIVESHAFT BOOTS FOR DAMAGE 2-33

B4. CHECK STEERING LINKAGE FOR DAMAGE AND LOOSE CONNECTIONS (including seals and boots) 2-33

B5. CHECK MANUAL TRANSMISSION FOR OIL LEAKAGE (In case of leakage, check the oil level). . . . 2-33

B6. CHANGE GEAR OIL IN MANUAL TRANSMISSION 2-34

B7. CHECK EXHAUST PIPE CONNECTIONS FOR GAS LEAKAGE, AND CHECK PIPE INSTALLATION 2-35

OPERATIONS INSIDE THE VEHICLE. 2-35

C1. CHECK BRAKE PEDAL AND CLUTCH PEDAL FOR FREE PLAY 2-35

C2. CHECK PARKING BRAKE LEVER STROKE AND PLAY 2-37

C3. REPLACE AIR PURIFIER FILTER 2-37

Continued on next page

OPERATIONS OUTSIDE THE VEHICLE 2-38
D1. CHECK WHEEL ALIGNMENT 2-38
D2. CHECK FRONT AND REAR WHEEL BEARINGS FOR PLAY 2-39
D3. CHECK BRAKE HOSES AND PIPES FOR LEAKAGE 2-40
D4. CHECK BRAKE PADS AND DISCS FOR WEAR 2-41
D5. CHECK BRAKE SHOE LININGS AND DRUMS (DRUM-IN-DISC) FOR WEAR . . . 2-41
D6. CHECK FUEL HOSES AND PIPES FOR LEAKAGE OR DETERIORATION . . . 2-42

OPERATIONS AFTER ENGINE IS WARMED UP 2-43
E1. CHECK FLUID LEVEL IN AUTOMATIC TRANSMISSION AND CVT 2-43
E2. CHANGE AUTOMATIC TRANSMISSION FLUID AND CVT FLUID 2-44
E3. CHANGE ENGINE OIL 2-46
E4. REPLACE ENGINE OIL FILTER 2-47
E6. CHECK EXHAUST GAS RECIRCULATION (EGR) SYSTEM 2-48

OTHERS 2-50
F1. CHECK BODY CONDITION FOR DAMAGE 2-50
F2. CHECK THE COMMON RAIL ENGINE (SMALL INJECTION QUANTITY LEARNING) 2-50
F3. ROAD TEST 2-50

PERIODIC INSPECTION AND MAINTENANCE SCHEDULE

M6020100102140

For items which indicate both distance and time (in months), the inspection should be made at whichever (distance or time) comes first.

<PETROL-POWERED VEHICLES>

Maintenance item			Maintenance operation	Maintenance interval	
OPERATIONS INSIDE THE ENGINE COMPARTMENT					
A1	Check drive belt for cracks, fraying, wear, and adjust its tension		Inspection	Every 40,000 km or every 2 years	
A3	Replace spark plugs	Iridium-tipped type	Replace	Every 100,000 km	
A4	Check valve clearance*1 (except vehicles with auto-lash adjuster)		4A9 and 4B1 engines	Every 100,000 km	
			4J1 engine	Every 60,000 km	
A5	Check radiator hoses for damage and proper connection		Inspection	Every 40,000 km or every 2 years	
A6	Check engine coolant level in reservoir		Inspection	Every 40,000 km or every 2 years	
A7	Change engine coolant		Change	First 180,000 km or 9 years, thereafter every 120,000 km or 6 years	
A8	Check air cleaner element for clogging and damage		Inspection	Normal usage	Every 20,000 km or every 12 months
				Severe usage	Every 10,000 km or every 6 months
A9	Replace air cleaner element		Replace	Normal usage	Every 60,000 km or every 3 years
				Severe usage	More frequently
A10	Check fluid level in brake reservoir and clutch reservoir		Inspection	Every 20,000 km or every 12 months	
A11	Change brake fluid		Change	Every 40,000 km or every 2 years	
A12	Check battery condition		Inspection	Every 20,000 km or every 12 months	
A13	Replace fuel filter		Replace	Every 160,000 km or every 10 years	
OPERATIONS UNDER THE VEHICLE					
B1	Check suspension system for damage and looseness		Inspection	Every 20,000 km or every 12 months	
B2	Check suspension arm ball joints for play, and dust covers for damage		Inspection	Every 20,000 km or every 12 months	
B3	Check driveshaft boots for damage		Inspection	Normal usage	Every 40,000 km or every 2 years
				Severe usage	Every 10,000 km

Maintenance item			Maintenance operation	Maintenance interval	
B4	Check steering linkage for damage and loose connections (including seals and boots)		Inspection	Every 40,000 km or every 2 years	
B5	Check manual transmission for oil leakage (In case of leakage, check the oil level)		Inspection	Every 20,000 km or every 12 months	
B6	Change gear oil in manual transmission	Except F5M43 model	Change	Normal usage	Every 200,000 km
				Severe usage	Every 100,000 km
		F5M43 model	Change	Normal usage	Every 100,000 km
				Severe usage	Every 40,000 km
B7	Check exhaust pipe connections for gas leakage, and check pipe installation		Inspection	Every 40,000 km or every 2 years	
OPERATIONS INSIDE THE VEHICLE					
C1	Check brake pedal and clutch pedal for free play		Inspection	Every 20,000 km or every 12 months	
C2	Check parking brake lever stroke and play		Inspection	Every 20,000 km or every 12 months	
C3	Replace air purifier filter		Replace	Normal usage	Every 20,000 km or every 12 months
				Severe usage	More frequently
OPERATIONS OUTSIDE THE VEHICLE					
D1	Check wheel alignment		Inspection	Every 20,000 km or every 12 months	
D2	Check front and rear wheel bearings for play		Inspection	Every 60,000 km or every 3 years	
D3	Check brake hoses and pipes for leakage		Inspection	Every 40,000 km or every 2 years	
D4	Check brake pads and discs for wear		Inspection	Normal usage	Every 20,000 km or every 12 months
				Severe usage	Every 10,000 km or every 6 months
D5	Check brake shoe linings and drums (drum in disc) for wear		Inspection	Normal usage	Every 40,000 km or every 2 years
				Severe usage	Every 20,000 km or every 12 months
D6	Check fuel hoses and pipes for leakage or deterioration		Inspection	Every 40,000 km or every 2 years	

Maintenance item		Maintenance operation	Maintenance interval	
OPERATIONS AFTER ENGINE IS WARMED UP				
E1	Check fluid level in automatic transmission and CVT	Inspection	Every 20,000 km or every 12 months	
E2	Change automatic transmission fluid and CVT fluid	Change	Normal usage	Every 80,000 km
			Severe usage	Every 40,000 km
E3	Change engine oil	Change	Normal usage	Every 20,000 km or every 12 months
			Severe usage	Every 10,000 km
E4	Replace engine oil filter	Replace	Normal usage	Every 20,000 km or every 12 months
			Severe usage	Every 10,000 km
E5	Check exhaust gas recirculation (EGR) system	Inspection	Every 20,000 km or every 12 months	
OTHERS				
F1	Check body condition for damage	Inspection	Every year	
F3	Road test	Inspection	Every 20,000 km or every 12 months	

<DIESEL- POWERED VEHICLES>

Maintenance item		Maintenance operation	Maintenance interval	
OPERATIONS INSIDE THE ENGINE COMPARTMENT				
A1	Check drive belt for cracks, fraying, wear, and adjust its tension	Inspection	Every 30,000 km or every 2 years	
A2	Check intake air hose for damage (vehicles with turbocharger)	Inspection	Every 30,000 km or every 2 years	
A4	Check valve clearance*1 (except vehicles with auto-lash adjuster)	Inspection	Every 45,000km	
A5	Check radiator hoses for damage and proper connection	Inspection	Every 30,000 km or every 2 years	
A6	Check engine coolant level in reservoir	Inspection	Every 30,000 km or every 2 years	
A7	Change engine coolant	Change	First 180,000 km or 9 years, thereafter every 120,000 km or 6 years	
A8	Check air cleaner element for clogging and damage	Inspection	Normal usage	Every 15,000 km or every 12 months
			Severe usage	Every 7,500 km or every 6 months

Maintenance item		Maintenance operation	Maintenance interval	
A9	Replace air cleaner element	Replace	Normal usage	Every 45,000 km or every 3 years
			Severe usage	More frequently
A10	Check fluid level in brake reservoir and clutch reservoir	Inspection	Every 15,000 km or every 12 months	
A11	Change brake fluid	Change	Every 30,000 km or every 2 years	
A12	Check battery condition	Inspection	Every 15,000 km or every 12 months	
A13	Replace fuel filter	Replace	Every 30,000 km or every 2 years	
OPERATIONS UNDER THE VEHICLE				
B1	Check suspension system for damage and looseness	Inspection	Every 30,000 km or every 2 years	
B2	Check suspension arm ball joints for play, and dust covers for damage	Inspection	Every 30,000 km or every 2 years	
B3	Check driveshaft boots for damage	Inspection	Normal usage	Every 30,000 km or every 2 years
			Severe usage	Every 7,500 km
B4	Check steering linkage for damage and loose connections (including seals and boots)	Inspection	Every 30,000 km or every 2 years	
B5	Check manual transmission for oil leakage (In case of leakage, check the oil level)	Inspection	Every 15,000 km or every 12 months	
B6	Change gear oil in manual transmission	Change	Normal usage	Every 195,000 km
			Severe usage	Every 90,000 km
B7	Check exhaust pipe connections for gas leakage, and check pipe installation	Inspection	Every 30,000 km or every 2 years	
OPERATIONS INSIDE THE VEHICLE				
C1	Check brake pedal and clutch pedal for free play	Inspection	Every 15,000 km or every 12 months	
C2	Check parking brake lever stroke and play	Inspection	Every 15,000 km or every 12 months	
C3	Replace air purifier filter	Replace	Every 15,000 km or every 12 months	
OPERATIONS OUTSIDE THE VEHICLE				
D1	Check wheel alignment	Inspection	Every 30,000 km or every 2 years	
D2	Check front and rear wheel bearings for play	Inspection	Every 60,000 km or every 4 years	

Maintenance item		Maintenance operation	Maintenance interval	
D3	Check brake hoses and pipes for leakage	Inspection	Every 30,000 km or every 2 years	
D4	Check brake pads and discs for wear	Inspection	Normal usage	Every 15,000 km or every 12 months
			Severe usage	Every 7,500 km or every 6 months
D5	Check brake shoe linings and drums (drum in disc) for wear	Inspection	Normal usage	Every 30,000 km or every 2 years
			Severe usage	Every 15,000 km or every 12 months
D6	Check fuel hoses and pipes for leakage or deterioration	Inspection	Every 30,000 km or every 2 years	
OPERATIONS AFTER ENGINE IS WARMED UP				
E3	Change engine oil	Change	Normal usage	Every 15,000km or every 12 months
			Severe usage	Every 7,500 km
E4	Replace engine oil filter	Replace	Normal usage	Every 15,000 km or every 12 months
			Severe usage	Every 7,500 km
OTHERS				
F1	Check body condition for damage	Inspection	Every year	
F2	Check the common rail engine (small injection quantity learning)	Inspection	Every 15,000 km or every 12 months	
F3	Road test	Inspection	Every 15,000 km or every 12 months	

*NOTE: *1: If found any noise from the valve any time, please check the valve clearance.*

NOTE: "Severe usage" specifications apply to only vehicles used under severe operating conditions. Severe operating conditions include the following cases:

1. *Driving in dusty area.*
2. *Driving on rough roads, on submerged roads, or hilly areas.*
3. *Driving cold zones.*
4. *Engine idling for a long time or short-distance travel during cold weather.*
5. *Frequent, sudden application of brakes.*
6. *Towing of a trailer.*
7. *Use as a taxi or as a rent-a-car.*
8. *When more than 50% of driving is in heavy city traffic and the ambient temperature is 32℃ or more.*
9. *When more than 50% of driving is at 120 km/h or more and the ambient temperature is 30℃ or more.*

OPERATIONS INSIDE THE ENGINE COMPARTMENT

A1. CHECK DRIVE BELT FOR CRACKS, FRAYING, WEAR, AND ADJUST ITS TENSION

M6020202900767

DRIVE BELT CONDITION

Check the whole rounds of the drive belt for cracks, fraying and wear.

ALTERNATOR AND OTHERS BELT TENSION CHECK <4A9>

Check the drive belt tension in the following procedure.

Standard value:

Item	When checked	When adjusted	When replaced
Vibration frequency Hz	140 – 171	148 – 164	198 – 221
Tension N	392 – 588	441 – 539	784 – 980
Deflection mm (Reference)	9.5 – 12.2	10.2 – 11.5	6.3 – 7.6

<When the vibration frequency is measured {Special tool (MB992080) is used}: Recommendation>

NOTE: The vibration frequency measuring method is recommended for check and adjustment of the alternator and others belt tension.

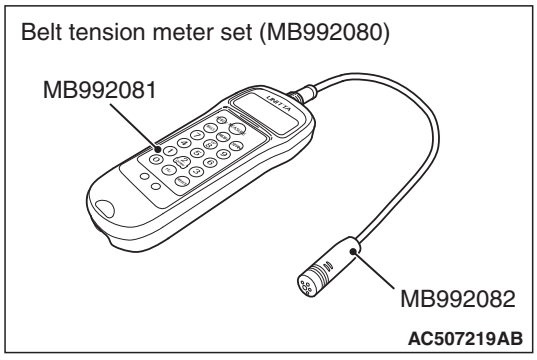

1. Connect the Special tool microphone assembly (MB992082) to the Special tool belt tension meter (MB992081) of the Special tool belt tension meter set (MB992080).
2. Press the "POWER" button to turn on the power supply.
3. Press number key 1. Check to ensure that "No. 01" appears on the upper left of the display and that the following numeric values are displayed for individual items (M, W, and S):

   M 000.9 g/m

   W 010.0 mm/R

   S 0100 mm

   If numeric values have not been entered (new tool), set them according to the belt specifications as shown below. Once you set them, you do not have to set them again. The settings remain undeleted even after battery replacement.

   NOTE: This operation is to temporarily set the preset data such as the belt specifications, because if the measurement is taken without input of the belt specifications, conversion to tension value (N) cannot be made, resulting in judgement of error.

   <Setting procedure>

   (1) Press down the "MASS" button till the belt mass select display appears.
   (2) Press the "UP" or "DOWN" button to select "01 1.5GT 0.9" and press the "MEASURE" button to decide it.
   Check to ensure that "M 000.9 g/m" is displayed.
   (3) Press the "WIDTH" button to change to the belt width input display.
   (4) Press number keys 0, 1, 0, and 0 sequentially, and press the "SELECT" button to apply them. Check to ensure that "W 010.0 mm/R" appears on the display.
   (5) Press the "SPAN" button to change to the span length input display.
   (6) Press number keys 0, 1, 0, and 0 sequentially, and press the "SELECT" button to apply them. Check to ensure that "S 0100 mm" appears on the display.
4. Press "Hz" button twice to change the display to the frequency display (Hz).

⚠ CAUTION

- **The temperature of the surface of the belt should be as close as possible to normal temperature.**
- **Do not let any contaminants such as water or oil get onto the microphone.**
- **If strong gusts of wind blow against the microphone or if there is loud sources of noise nearby, the values measured by the microphone may not correspond to actual values.**
- **If the microphone is touching the belt while the measurement is being made, the values measured by the microphone may not correspond to actual values.**
- **Do not take the measurement while the vehicle's engine is running.**

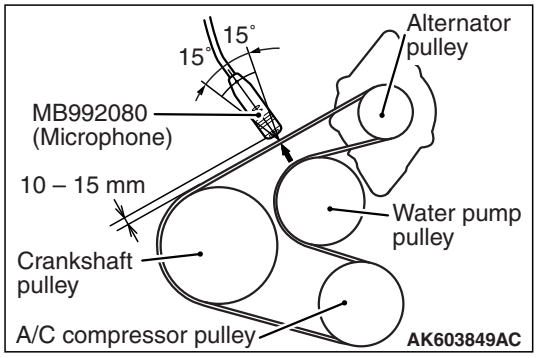

5. Hold the microphone to the middle of the alternator and others belt between the pulleys (at the place indicated by the arrow), about 10 – 15 mm away from the rear surface of the belt and so that it is perpendicular to the belt (within an angle of ± 15 °).
6. Press the "MEASURE" button.
7. Gently tap the middle of the belt between the pulleys (the place indicated by the arrow) with your finger as shown in the illustration, and check that the vibration frequency of the belt is within the standard value.

   NOTE: To take the measurement repeatedly, fillip the belt again.
8. After the completion of the measurement, press and hold the "POWER" button to turn off the power supply.

<When using the tension gauge>

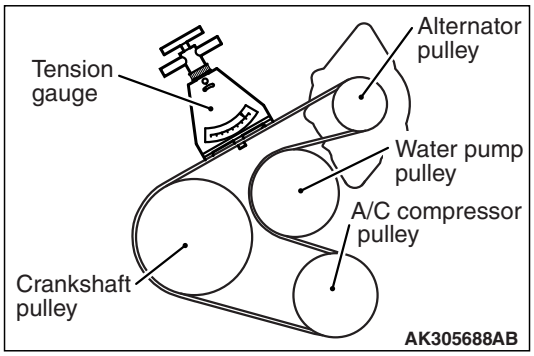

Use a belt tension gauge to check that the belt tension is within the standard value.

<Belt deflection check>

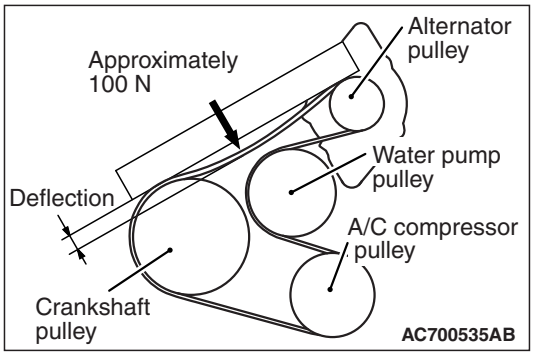

Apply approx. 100 N of force to the middle of the alternator and others belt between the pulleys (at the place indicated by the arrow) and check that the amount of deflection is within the standard value. When the belt tension is adjusted by measuring the deflection, adjust it with a tool for vibration frequency measurement or tension measurement afterward.

ALTERNATOR AND OTHERS BELT TENSION ADJUSTMENT <4A9>

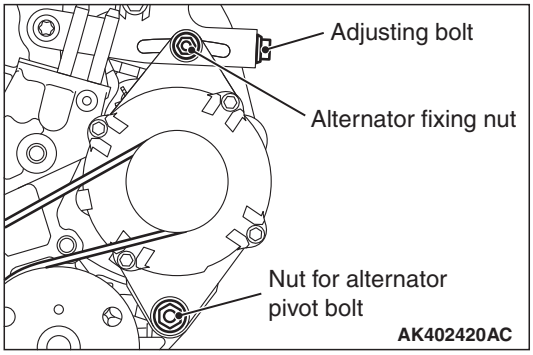

If not within the standard value, adjust the belt tension by the following procedure.

1. Loosen the nut of the alternator pivot bolt.
2. Loosen the alternator fixing nut.
3. Use the adjusting bolt to adjust the belt tension and belt deflection to the standard values.

4. Temporarily tighten the alternator fixing nut.
   Tightening torque: 11 ± 3 N·m
5. Tighten the nut of the alternator pivot bolt.
   Tightening torque: 47 ± 5 N·m
6. Tighten the alternator fixing nut.
   Tightening torque: 23 ± 2 N·m
7. Tighten the adjusting bolt.
   Tightening torque: 5.0 ± 1.0 N·m

⚠ CAUTION
When checking the belt tension, turn the crankshaft clockwise one turn or more.

8. Check the belt tension, and readjust if necessary.
9. When the belt tension is adjusted by measuring the deflection, adjust it with a tool for vibration frequency measurement or tension measurement afterward.

POWER STEERING OIL PUMP DRIVE BELT TENSION CHECK <4A9, Euro4>

NOTE:
- *An elastic stretch-type belt is used for the power steering oil pump drive, therefore, the tension adjustment is not necessary.*
- *Perform the power steering oil pump drive belt tension check according to the following procedures.*

<When the vibration frequency is measured: Recommendation>

⚠ CAUTION
- **When measuring the vibration frequency, make sure that the engine is cold.**
- **Measure the vibration frequency after turning the crankshaft clockwise one turn or more.**

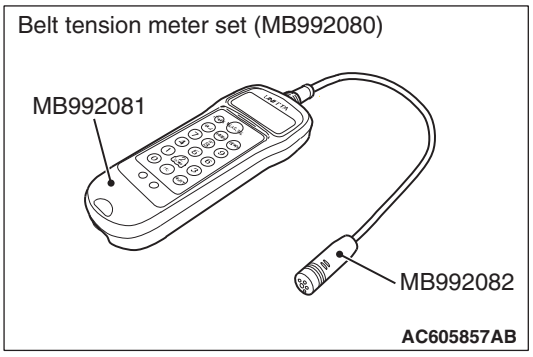

1. Connect the special tool microphone assembly (MB992082) to the special tool belt tension meter (MB992081) of the special tool belt tension meter set (MB992080).
2. Press the "POWER" button to turn on the power supply.
3. Press number key 1. Check to ensure that "No. 01" appears on the upper left of the display and that the following numeric values are displayed for individual items (M, W, and S):

   M 000.9 g/m

   W 010.0 mm/R

   S 0100 mm

   If numeric values have not been entered (new tool), set them according to the belt specifications as shown below. Once you set them, you do not have to set them again. The settings remain undeleted even after battery replacement.

   NOTE: This operation is to temporarily set the preset data such as the belt specifications, because if the measurement is taken without input of the belt specifications, conversion to tension value (N) cannot be made, resulting in judgement of error.

   <Setting procedure>
   (1) Press down the "MASS" button till the belt mass select display appears.
   (2) Press the "UP" or "DOWN" button to select "01 1.5GT 0.9" and press the "MEASURE" button to decide it. Check to ensure that "M 000.9 g/m" is displayed.
   (3) Press the "WIDTH" button to change to the belt width input display.
   (4) Press number keys 0, 1, 0, and 0 sequentially, and press the "SELECT" button to apply them. Check to ensure that "W 010.0 mm/R" appears on the display.
   (5) Press the "SPAN" button to change to the span length input display.
   (6) Press number keys 0, 1, 0, and 0 sequentially, and press the "SELECT" button to apply them. Check to ensure that "S 0100 mm" appears on the display.
4. Press "Hz" button twice to change the display to the frequency display (Hz).

⚠ CAUTION

- **Do not allow any contaminants such as water or oil to get onto the microphone.**
- **If strong gusts of wind blow against the microphone or if there are any loud sources of noise nearby, the values measured by the microphone may not correspond to actual values.**
- **If the microphone is touching the belt while the measurement is being made, the values measured by the microphone may not correspond to actual values.**
- **Do not take the measurement while the vehicle's engine is running.**

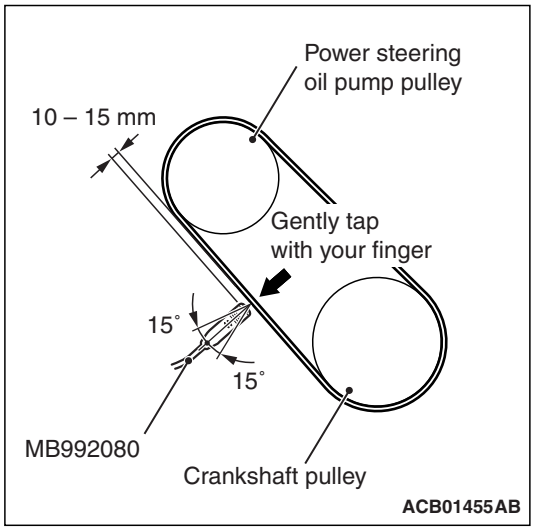

5. Hold the special tool MB992080 to the middle of the drive belt between the pulleys (at the place indicated by arrow), approximately 10 – 15 mm away from the rear surface of the drive belt so that it is perpendicular to the drive belt (within an angle of ± 15°).
6. Press the "MEASURE" button.
7. Gently tap the middle of the drive belt between the pulleys (the place indicated by the arrow) with your finger as shown in the illustration, and measure that the vibration frequency of the drive belt is within the standard value.

   Standard value (Reference): 108 – 221 Hz

   NOTE: To take the measurement repeatedly, fillip the drive belt again.
8. After the completion of the measurement, press and hold the "POWER" button to turn off the power supply.
9. If not within the standard value, replace the power steering oil pump drive belt.

<When the tension is measured>

⚠ CAUTION

- **When measuring the tension, make sure that the engine is cold.**
- **Measure the tension after turning the crankshaft clockwise one turn or more.**

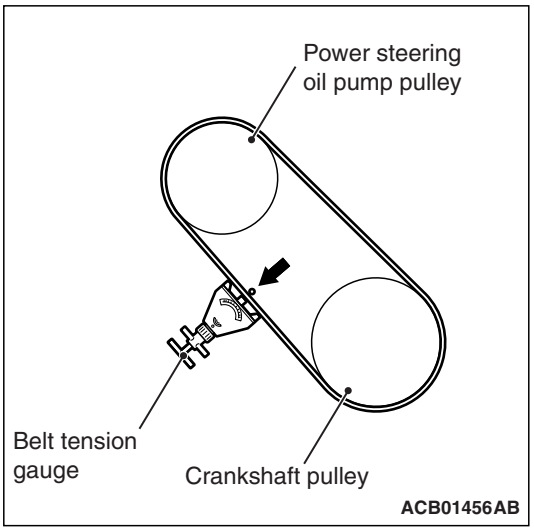

1. Use a belt tension gauge in the middle of the power steering oil pump drive belt between the pulleys shown in the figure (at the place indicated by the arrow) to check that the drive belt tension is within the standard value.

   Standard value (Reference): 169 – 720 N
2. If not within the standard value, replace the power steering oil pump drive belt.

<When the deflection is measured>

⚠ CAUTION

- **When measuring the deflection, make sure that the engine is cold.**
- **Measure the deflection after turning the crankshaft clockwise one turn or more.**

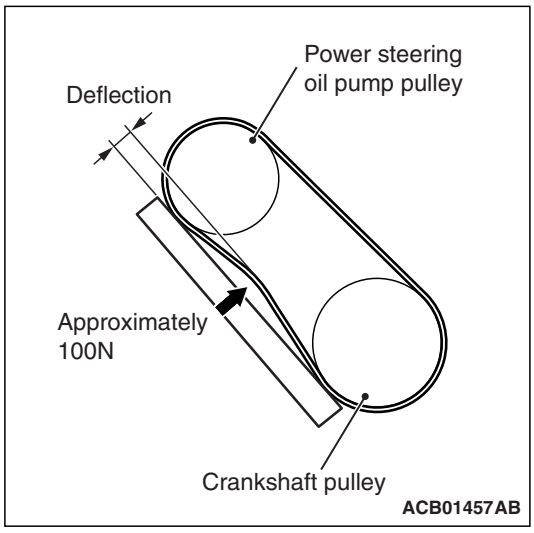

1. Apply approximately 100 N of force to the middle of the power steering oil pump drive belt between the pulleys (at the place indicated by the arrow) and check that the amount of deflection is within the standard value.

   Standard value (Reference): 18.2 mm or less

2. If not within the standard value, replace the power steering oil pump drive belt.

DRIVE BELT TENSION CHECK <4B10, 4J1>

⚠ CAUTION

Check the drive belt tension after turning the crankshaft clockwise one turn or more.

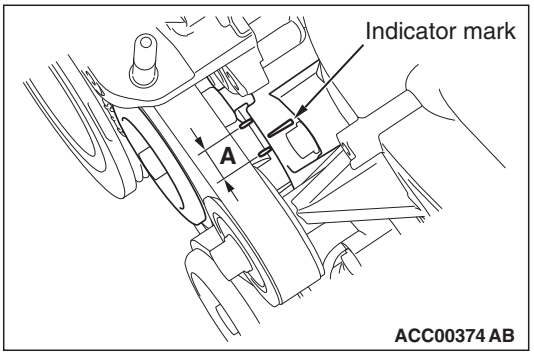

1. Make sure that the indicator mark on the drive belt auto-tensioner is within the area marked with A in the illustration.
2. If the mark is out of the area A, replace the drive belt.

   NOTE: The drive belt tension adjustment is not necessary as the drive belt auto-tensioner is adopted.

ALTERNATOR AND OTHERS BELT TENSION CHECK <4B11>

1. Remove the radiator condenser tank mounting bolt, and move the radiator condenser tank to a place where it does not interfere with the alternator and others belt tension check.

⚠ CAUTION

Check the drive belt tension after turning the crankshaft clockwise one turn or more.

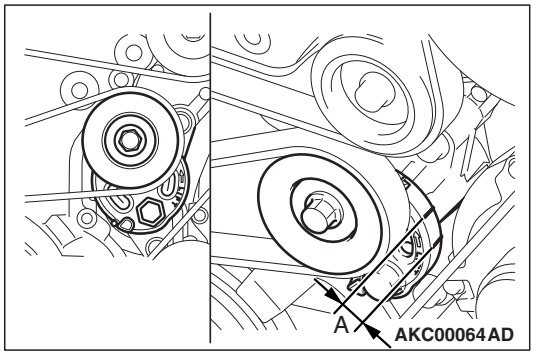

2. Make sure that the indicator mark on the drive belt auto-tensioner is within the area marked with A in the illustration.
3. If the mark is out of the area A, replace the drive belt.

   NOTE: The drive belt tension adjustment is not necessary as the drive belt auto-tensioner is adopted.

4. Install the radiator condenser tank to the original position.

DRIVE BELT TENSION CHECK <4N1>

⚠ CAUTION

Check the alternator and others belt tension after turning the crankshaft clockwise one turn or more.

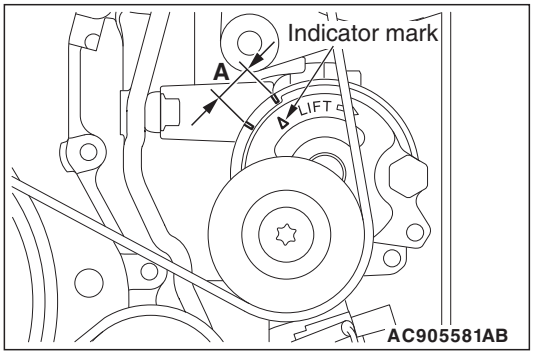

1. Make sure that the indicator mark is within the area marked with A in the illustration.
2. If the mark is out of the area A, replace the alternator and others belt.

   NOTE: The alternator and others belt tension check is not necessary as alternator drive belt auto-tensioner is adopted.

WATER PUMP DRIVE BELT TENSION CHECK <4N1>

NOTE:

- *An elastic stretch-type belt is used for the water pump drive, therefore, the tension adjustment is not necessary.*
- *Perform the water pump drive belt tension check according to the following procedures.*

<When the vibration frequency is measured: recommendation>

⚠ CAUTION

- **When measuring the vibration frequency, make sure that the engine is cold.**
- **Measure the vibration frequency after turning the crankshaft clockwise one turn or more.**

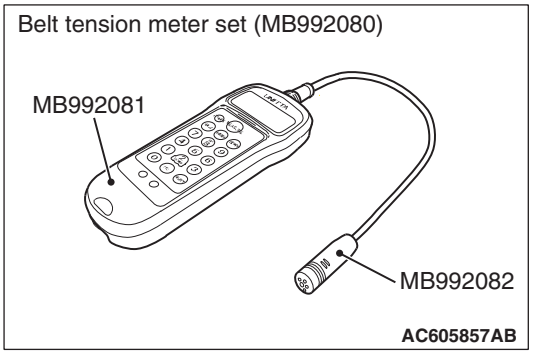

1. Connect the special tool microphone assembly (MB992082) to the special tool belt tension meter (MB992081) of the special tool belt tension meter set (MB992080).
2. Press the "POWER" button to turn on the power supply.
3. Press number key 1. Check to ensure that "No. 01" appears on the upper left of the display and that the following numeric values are displayed for individual items (M, W, and S):

   M 000.9 g/m

   W 010.0 mm/R

   S 0100 mm

   If numeric values have not been entered (new tool), set them according to the belt specifications as shown below. Once you set them, you do not have to set them again. The settings remain undeleted even after battery replacement.

   NOTE: This operation is to temporarily set the preset data such as the belt specifications, because if the measurement is taken without input of the belt specifications, conversion to tension value (N) cannot be made, resulting in judgement of error.

   <Setting procedure>

   (1) Press down the "MASS" button till the belt mass select display appears.
   (2) Press the "UP" or "DOWN" button to select "01 1.5GT 0.9" and press the "MEASURE" button to decide it. Check to ensure that "M 000.9 g/m" is displayed.
   (3) Press the "WIDTH" button to change to the belt width input display.
   (4) Press number keys 0, 1, 0, and 0 sequentially, and press the "SELECT" button to apply them. Check to ensure that "W 010.0 mm/R" appears on the display.
   (5) Press the "SPAN" button to change to the span length input display.
   (6) Press number keys 0, 1, 0, and 0 sequentially, and press the "SELECT" button to apply them. Check to ensure that "S 0100 mm" appears on the display.

4. Press "Hz" button twice to change the display to the frequency display (Hz).

⚠ CAUTION

- **Do not allow any contaminants such as water or oil to get onto the microphone.**
- **If strong gusts of wind blow against the microphone or if there are any loud sources of noise nearby, the values measured by the microphone may not correspond to actual values.**
- **If the microphone is touching the belt while the measurement is being made, the values measured by the microphone may not correspond to actual values.**
- **Do not take the measurement while the vehicle's engine is running.**

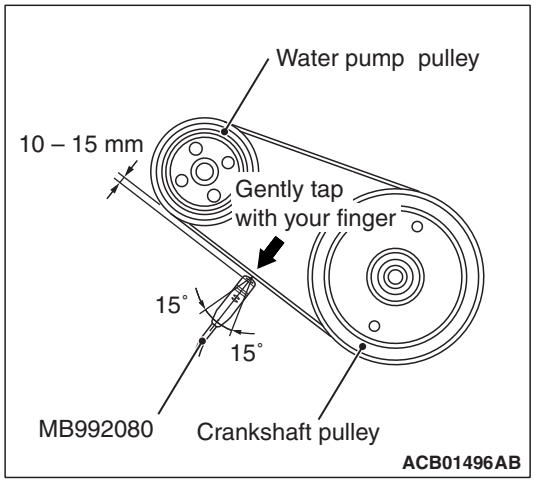

5. Hold the special tool MB992080 to the middle of the drive belt between the pulleys (at the place indicated by arrow), approximately 10 – 15 mm away from the rear surface of the drive belt so that it is perpendicular to the drive belt (within an angle of ± 15°).
6. Press the "MEASURE" button.
7. Gently tap the middle of the drive belt between the pulleys (the place indicated by the arrow) with your finger as shown in the illustration, and measure that the vibration frequency of the drive belt is within the standard value.

   Standard value (Reference):
   - **MIVEC: 113 – 264 Hz**
   - **Except MIVEC: 141 – 249 Hz**

   NOTE: To take the measurement repeatedly, fillip the water pump drive belt again.
8. After the completion of the measurement, press and hold the "POWER" button to turn off the power supply.
9. If not within the standard value, replace the water pump drive belt.

<When the tension is measured>

⚠ CAUTION

- **When measuring the tension, make sure that the engine is cold.**
- **Measure the tension after turning the crankshaft clockwise one turn or more.**

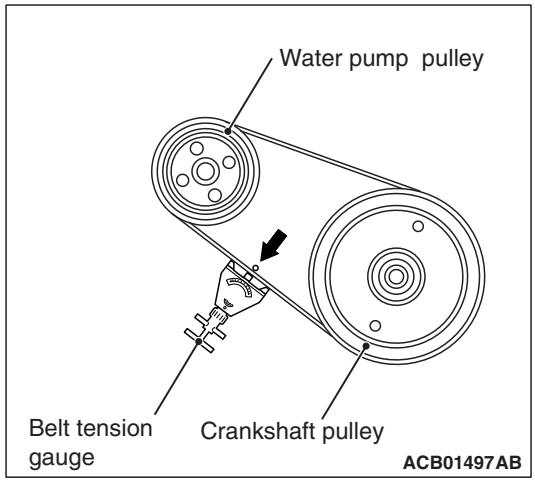

1. Use a belt tension gauge in the middle of the drive belt between the pulleys shown in the figure (at the place indicated by the arrow) to check that the drive belt tension is within the standard value.

   Standard value (Reference):
   - **MIVEC: 100 – 550 N**
   - **Except MIVEC: 158 – 496 N**
2. If not within the standard value, replace the water pump drive belt.

A2. CHECK INTAKE AIR HOSE FOR DAMAGE (vehicles with a turbocharger)

M6020200500547

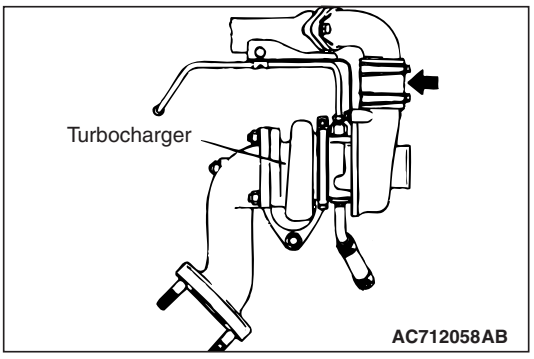

1. Inspect the intake air hoses for cracks or damage.

A3. REPLACE SPARK PLUGS

M6020200800571

After removing old spark plugs, install new ones and tighten them at the specified torque.

A4. CHECK VALVE CLEARANCE (except vehicles with auto-lash adjuster)

M6020202400881

<4A9>

NOTE: Perform the valve clearance check and adjustment at the engine cold state.

1. Remove all ignition coils.
2. Remove the cylinder head cover.

⚠ CAUTION

Turn the crankshaft always clockwise.

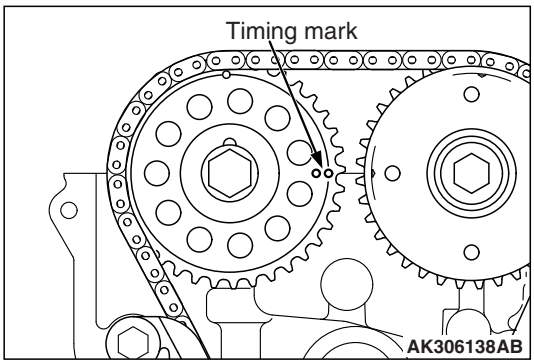

3. Turn the crankshaft clockwise, and align the timing mark on the exhaust camshaft sprocket against the upper face of the cylinder head as shown in Figure. Therefore, No.1 cylinder goes to the compression top dead centre.

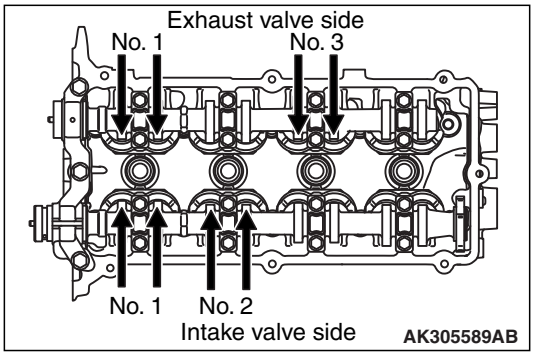

4. Using a thickness gauge, measure the valve clearance with the arrow shown in Figure. If deviated from the standard value, make note for the valve clearance.

   Standard value:
   Intake valve 0.22 ± 0.04 mm
   Exhaust valve 0.30 ± 0.04 mm

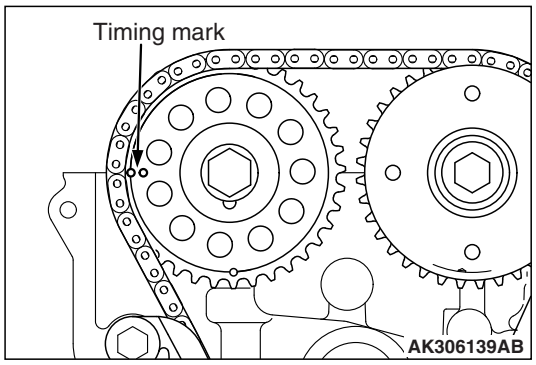

5. Turn the crankshaft clockwise 360 degrees, and put the timing mark on the exhaust camshaft sprocket in position shown in Figure. Therefore, No.4 cylinder goes to the compression top dead centre.

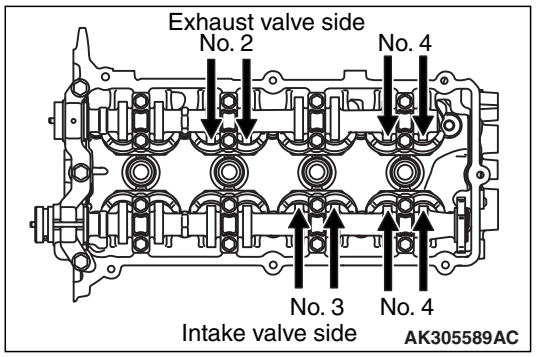

6. Check the valve clearance with the arrow shown in Figure. In the same procedure as 4.
7. If the valve clearance is deviated from the standard value, remove the camshaft and the valve tappet. For the camshaft removal, refer to WORKSHOP MANUAL Group 12-Camshaft Removal and Installation.

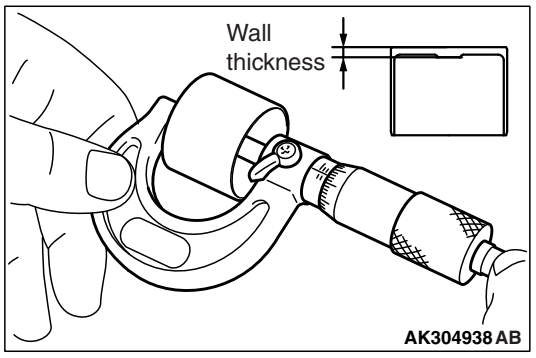

8. Using a micrometer, measure the thickness of the removed valve tappet.

9. Calculate the thickness of the newly installed valve tappet through the following equation.

   A: thickness of newly installed valve tappet

   B: thickness of removed valve tappet

   C: measured valve clearance

   Equation
   Intake valve: A = B + (C − 0.22 mm)
   Exhaust valve: A = B + (C − 0.30 mm)

   NOTE:

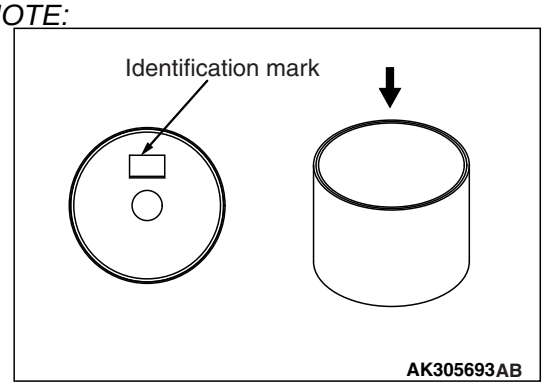

   The valve tappet ranges 5.10 − 5.70 mm and has 31 types per 0.02 mm. The thickness below a decimal point is stamped on the reverse side of the valve tappet.
   Example: In case of 5.40 mm, "40" is stamped.

10. Install the valve tappet selected through the procedure 9, and put the camshaft in position. For the camshaft installation, refer to WORKSHOP MANUAL Group12-Camshaft Removal and Installation.

11. Remove any liquid gasket remaining on the cylinder head cover, the timing chain case and the cylinder head.

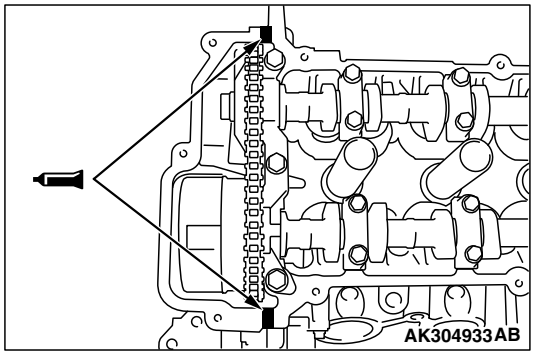

⚠ CAUTION
The cylinder head cover should be installed within 3 minutes of applying liquid gasket.

12. Apply a 4 mm bead of liquid gasket as illustrated.

   Specified sealant:
   Three bond 1217G or exact equivalent

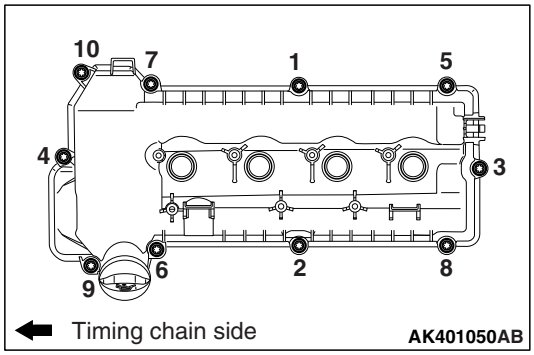

13. Install the cylinder head cover and tighten the tightening bolts using the following procedures.
   (1) Temporarily tighten to the following torque in order shown in the illustration.

   Tightening torque: 3.0 ± 1.0 N·m

   (2) Tighten to the specified torque in order shown in the illustration.

   Specified torque: 5.5 ± 0.5 N·m

14. Install the ignition coils.

<4B1>

NOTE: Perform the valve clearance check and adjustment at the engine cold state.

1. Remove all ignition coils.
2. Remove the cylinder head cover.

⚠ CAUTION
Turn the crankshaft always clockwise.

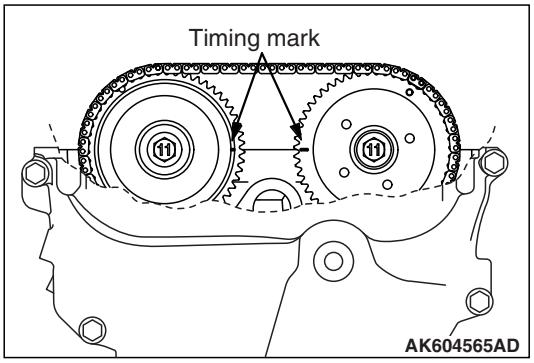

3. Turn the crankshaft clockwise, and align the timing mark on the exhaust camshaft sprocket against the upper face of the cylinder head as shown in Figure. Therefore, No.1 cylinder goes to the compression top dead centre.

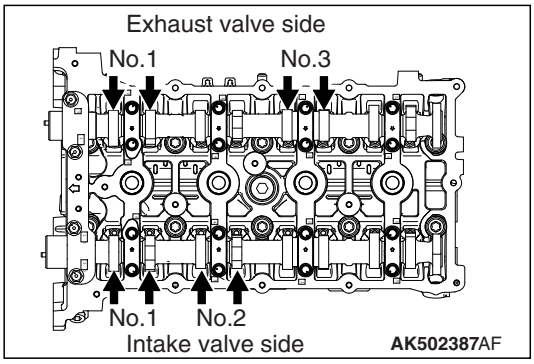

4. Using a thickness gauge, measure the valve clearance with the arrow shown in Figure. If deviated from the standard value, make note for the valve clearance.

   Standard value:
   Intake valve 0.20 ± 0.03 mm
   Exhaust valve 0.30 ± 0.03 mm

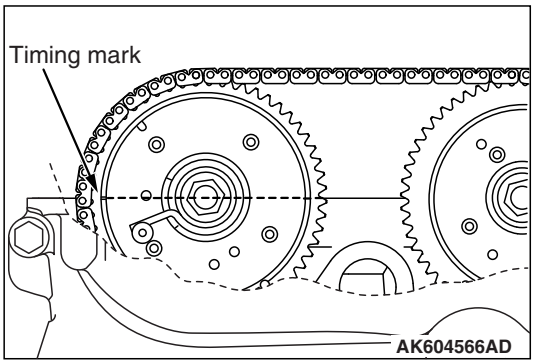

5. Turn the crankshaft clockwise 360 degrees, and put the timing mark on the exhaust camshaft sprocket in position shown in Figure. Therefore, No.4 cylinder goes to the compression top dead centre.

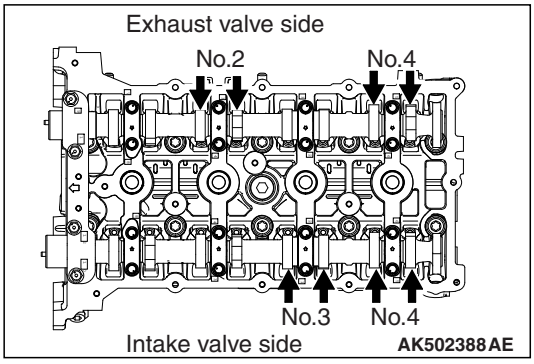

6. Check the valve clearance with the arrow shown in Figure. In the same procedure as 4.
7. If the valve clearance is deviated from the standard value, remove the camshaft and the valve tappet.

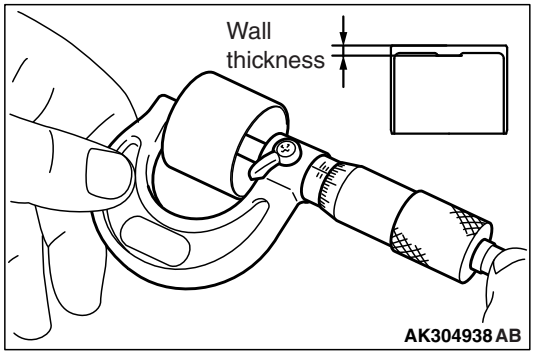

8. Using a micrometer, measure the thickness of the removed valve tappet.
9. Calculate the thickness of the newly installed valve tappet through the following equation.

   A: thickness of newly installed valve tappet

   B: thickness of removed valve tappet

   C: measured valve clearance

   Equation

   Intake valve: A = B + (C – 0.20 mm)

   Exhaust valve: A = B + (C – 0.30 mm)

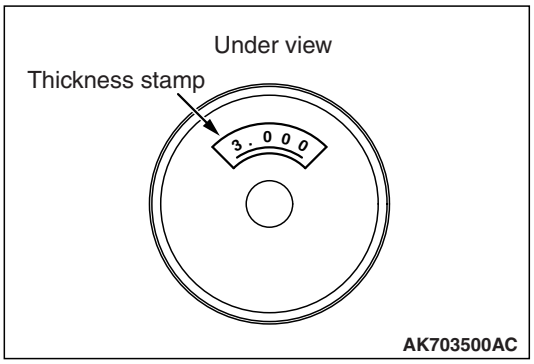

   NOTE: The valve tappet ranges 3,000 – 3,690 mm and has 47 types per 0.015 mm. The thickness below a decimal point is stamped on the reverse side of the valve tappet.

10. Install the valve tappet selected through the procedure 9, and put the camshaft in position.
11. After installing the timing chain, measure the valve clearance using the procedure 3 to 6. Confirm the clearance is within the standard value.

⚠ CAUTION

Completely remove all the old liquid gasket, which might be remaining among the components.

12. Remove any liquid gasket remaining on the cylinder head cover, the timing chain case and the cylinder head.

13.Using white gasoline and so on, degrease the cylinder head cover, timing chain case and cylinder head.

⚠ CAUTION

The cylinder head cover should be installed within 3 minutes of applying liquid gasket.

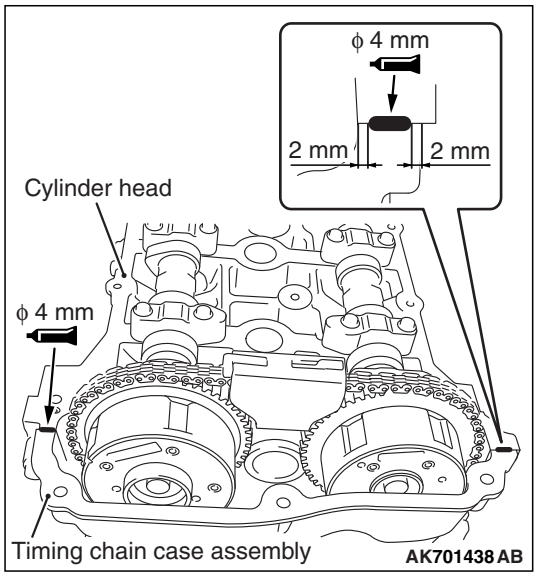

14.Apply a 4 mm bead of liquid gasket as illustrated.

Specified sealant:
Three bond 1217G or equivalent

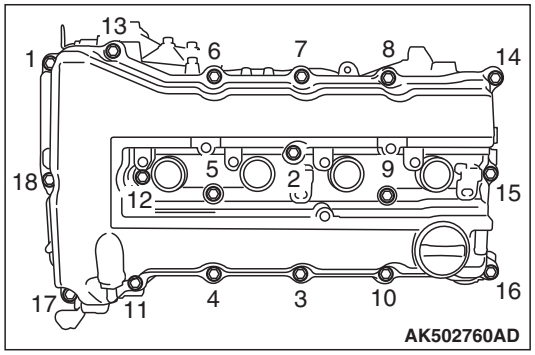

15. Install the cylinder head cover and tighten the tightening bolts using the following procedures.
(1) Temporarily tighten to the following torque in order shown in the illustration.

Tightening torque: 3.0 ± 1.0 N·m

(2) Tighten to the specified torque in order shown in the illustration.

Specified torque: 5.5 ± 0.5 N·m

16.Install the ignition coils.

<4N1>

NOTE: The valve clearance check and adjustment should be done when the engine is cold.

1. Remove the fuel injector and common rail assembly and also the rocker cover assembly.

⚠ CAUTION

The crankshaft should always be turned in a clockwise direction.

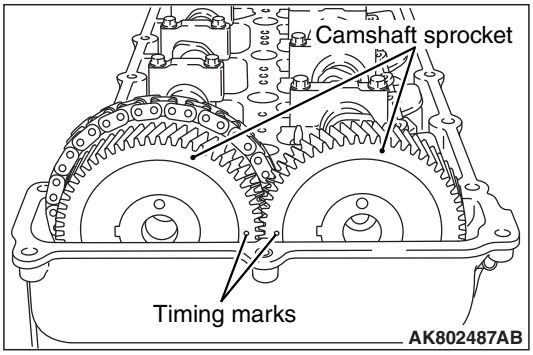

2. Align the camshaft sprocket timing marks and set the No. 1 cylinder at compression stroke top dead centre.

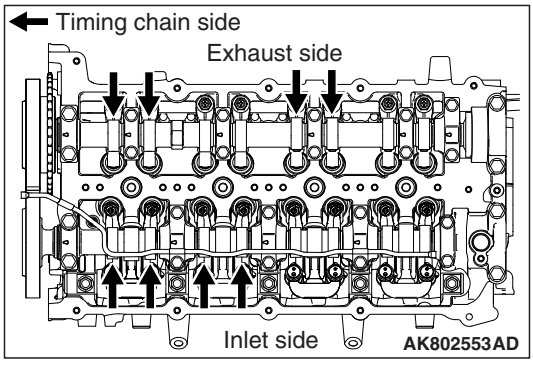

3. For the portions with the arrows shown below, measure and adjust the valve clearances by using the following procedures.

< Sides except inlet side without MIVEC >

1.) By using the thickness gauge, measure the clearance between the cam and roller.

Standard value (cold engine):
Inlet valve: 0.08 ± 0.03 mm
Exhaust valve: 0.16 ± 0.03 mm

2.) By using the thickness gauge, measure the clearance between the cam and roller.

⚠ CAUTION

Pay special attention that the tightening torque is not beyond this valve. If the tightening torque is beyond the valve, the valve stem would possibly bend.

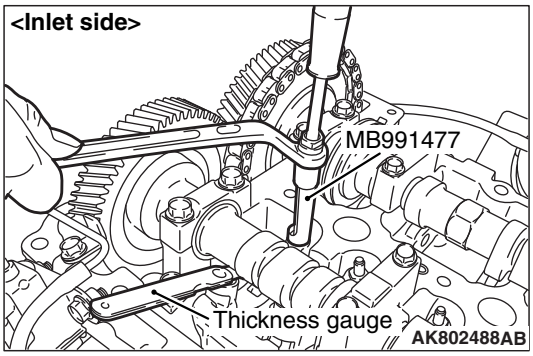

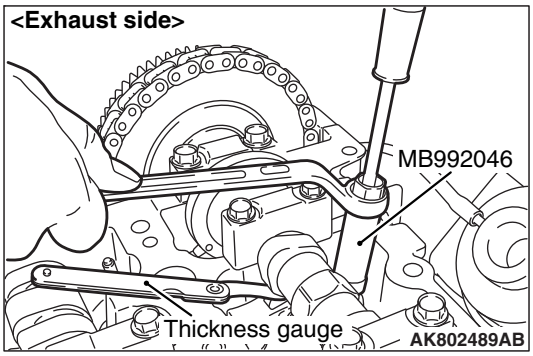

3.)While holding the adjusting screw with a screwdriver to prevent it from turning, tighten the lock nut to the specified torque using the special tool, valve adjusting socket.

Special tool (valve adjusting socket):
Inlet side: MB991477
Exhaust side: MB992046

Tightening torque:
Inlet side: 9 ± 1 N·m
Exhaust side: 9.8 ± 1 N·m

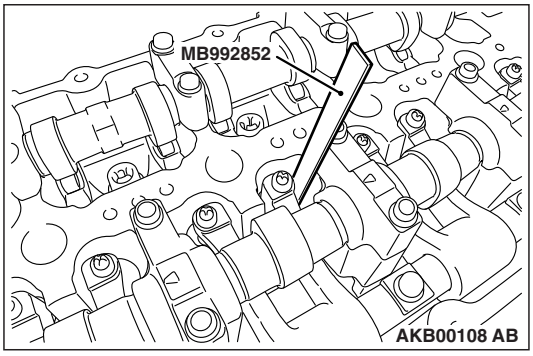

< Inlet side without MIVEC>

1.) By using the special tool MB992852 (valve adjusting feeling gauge), check that the clearance is within the standard value between the valve stem and adjusting screw.

Standard value: 0.14 ± 0.03 mm

2.)If the valve clearance is not as specified, loosen the adjusting screw lock nut and adjust the clearance using the special tool MB992852 (valve adjusting feeling gauge) between the valve stem and the adjusting screw while turning the adjusting screw.

⚠ CAUTION

Pay special attention that the tightening torque is not beyond this valve. If the tightening torque is beyond the valve, the valve stem would possibly bend.

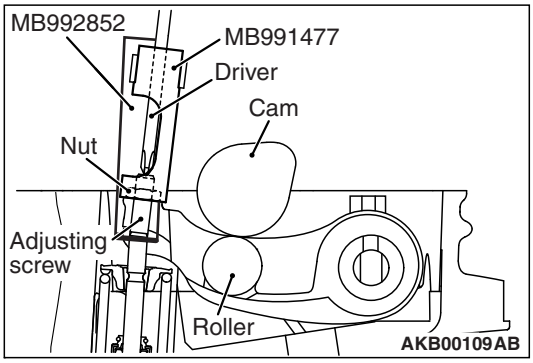

3.)While holding the adjusting screw with a screwdriver to prevent it from turning, tighten the lock nut to the specified torque using the special tool MB991477 (valve adjusting socket).

Tightening torque: 9 ± 1 N·m

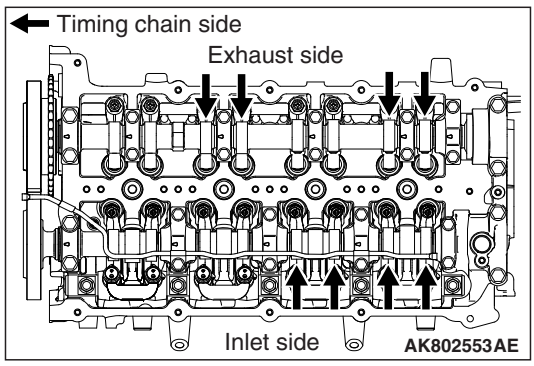

4. Turn the crankshaft 360° clockwise to bring No. 4 cylinder to the top dead centre position.
5. For the portions with the arrows shown below, measure and adjust the valve clearances by using the same procedures as ones in the Step 3.
6. Install the rocker cover assembly and also the fuel injector and common rail assembly.

⚠ CAUTION

To prevent damage to M.U.T.-III, always turn the ignition switch to the "LOCK" (OFF) position before connecting or disconnecting M.U.T.-III.

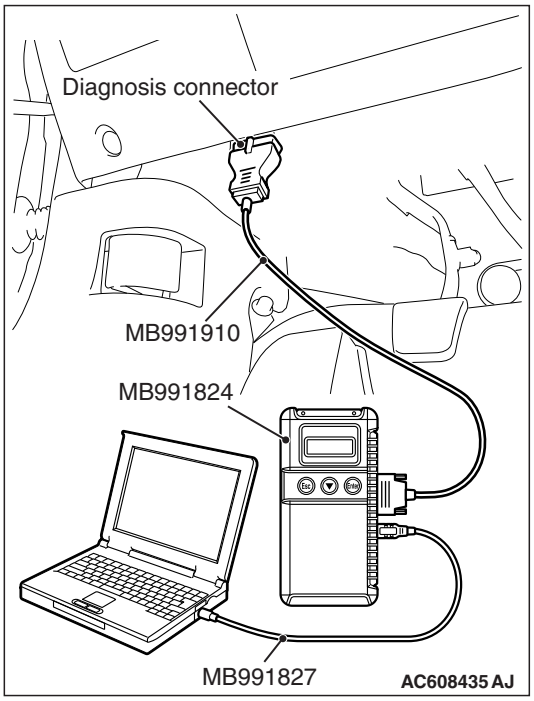

7. After the ignition switch is in "LOCK" (OFF) position, connect the M.U.T.-III to the diagnosis connector.
8. Start the engine, and let it run at idle.
9. Select "MPI/GDI/DIESEL" from System select Screen of the M.U.T.-III.
10. Select "Special Function" from MPI/GDI/DIESEL Screen.
11. Select "Test" from Special Function Screen.
12. Select "Fuel leakage check" from Test Screen. Carry out the fuel leakage check five times in a row.

    NOTE: During the test, the engine speed and the fuel pressure is 2, 000 r/min and 180MPa for 20 seconds respectively.
13. Turn the ignition switch to the "LOCK" (OFF) position.
14. Confirm there is no fuel leak from the joint for the injection pipe.

<4J1>

NOTE: The inlet valve side has the inlet continuous variable valve lift system. The oil clearance between the arm and the shaft makes it difficult to measure the valve clearance with the usual feeler gauge. Therefore, use the dial gauge and check the amount of valve lift.

1. Let the engine be in cold state.
2. Turn the ignition switch to the "LOCK" (OFF) position.
3. Remove the valve lift control motor and the motor bracket.
4. Remove all ignition coils.
5. Remove the rocker cover assembly.

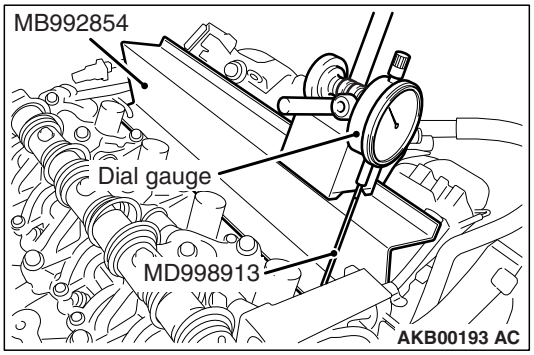

6. Install the special tool magnet base plate (MB992854) to the upper face of the cylinder head at the inlet side.

   NOTE: At that time, remove the injector connector and the fixed portion of the harness bracket so that the engine harness cannot interfere with the installation.
7. Install the special tool dial gauge extension (MD998913) to the dial gauge.
8. When installing the dial gauge to the magnet base plate, the dial gauge must have almost the same angle as the inlet valve has.

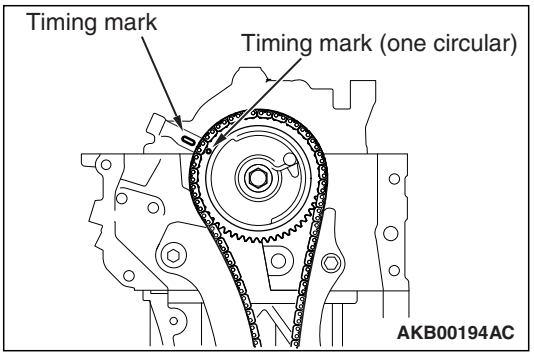

9. Rotate the crankshaft clockwise and align the timing mark of the rocker shaft holder with the one circular timing mark of the V.V.T. sprocket. Therefore, the No. 1 cylinder is set at the top dead centre on its compression stroke.
10. For the No. 1 cylinder inlet valve, check and adjust the valve clearance according to the following procedures.

⚠ CAUTION

- **Never loosen the five Torx bolts at the upper portions of the rocker arm and camshaft assembly.**
- **Never loosen the minimum lift stopper.**
- **When rotating the coupling, do not apply the torque more than 3 N·m to prevent the damage.**
- **Do not forcibly push the worm wheel to the minimum lift stopper and the maximum lift stopper.**

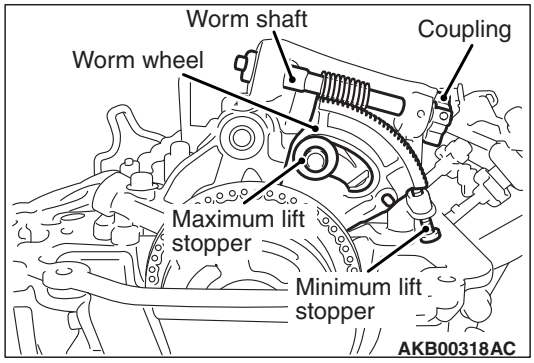

11. Slowly rotate the coupling clockwise. When lightly touching the worm wheel to the minimum lift stopper, stop the worm wheel at the position shown in the illustration.

    NOTE: When rotating the coupling clockwise, the worm wheel should move in the minimum lift direction. When rotating the coupling anti-clockwise, the worm wheel should move in the maximum lift direction.

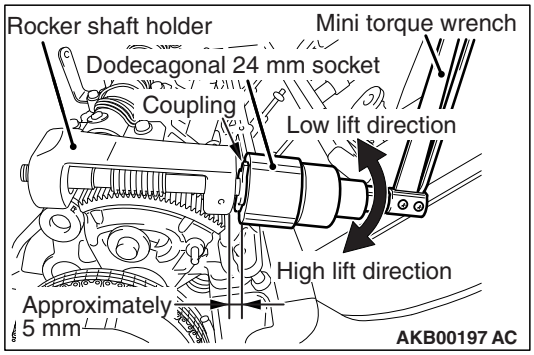

NOTE: When manually rotating the coupling, insert the dodecagonal 24 mm socket into the position on the coupling approximately 5 mm away from the rocker shaft holder. Connect the mini torque wrench and slowly rotate them.

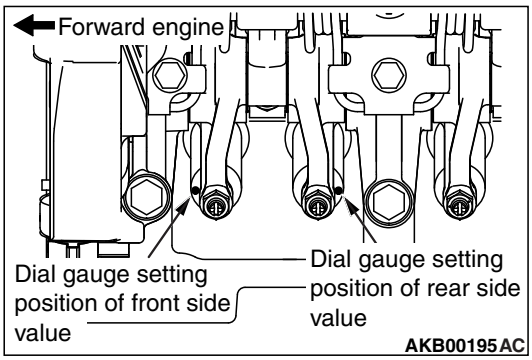

12. Set the dial gauge on the upper face of the valve spring retainer at the forward engine side. Set the dial gauge to 0.

    NOTE: As shown in the illustration, prevent the measurement error caused by the tilted valve, install the rocker arm to the outside of the rocker arm.

⚠ CAUTION

- **When rotating the coupling, do not apply the torque more than 3 N·m to prevent the damage.**
- **Do not forcibly push the worm wheel to the minimum lift stopper and the maximum lift stopper.**

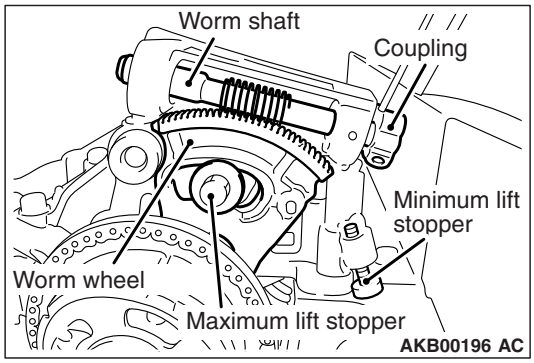

13.Slowly rotate the coupling. Place the worm wheel as shown in the illustration so that the centre of the worm wheel gear can engage with the worm shaft (at around the middle lift position).

NOTE: When rotating the coupling clockwise, the worm wheel should move in the minimum lift direction. When rotating the coupling anti-clockwise, the worm wheel should move in the maximum lift direction.

⚠ CAUTION

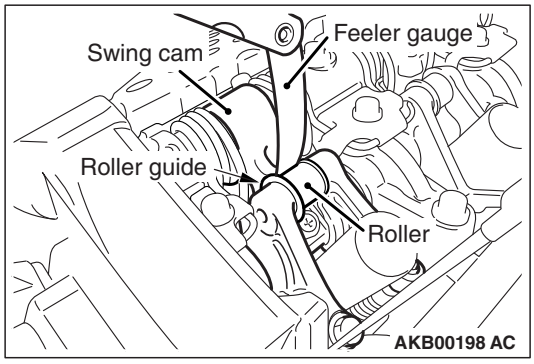

- **Straightly insert the feeler gauge in the vertical direction not to touch the rocker arm roller guide.**
- **When inserting the feeler gauge too much, you cannot pull out the feeler gauge after the adjustment. Do not insert the feeler gauge by more than 5 mm.**

14.Pushing the feeler gauge with 0.15 mm in thickness between the swing cam and the roller of the rocker arm, rotate the coupling clockwise. Rotate the worm wheel to the minimum lift side. Insert the feeler gauge top by approximately 5 mm.

NOTE: If the valve clearance is excessive caused by the loosened adjusting screw and also if the feeler gauge can easily be inserted, perform the adjustment according to the overhaul valve clearance adjustment procedures.

NOTE: If not easily inserting the feeler gauge, you can insert the feeler gauge more easily by rotating the crankshaft clockwise 2 revolutions with pushing the feeler gauge.

⚠ CAUTION

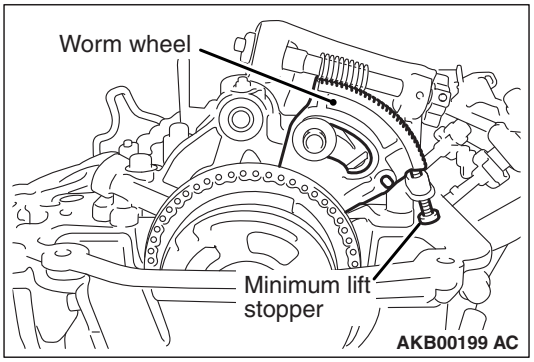

Do not forcibly push the worm wheel to the minimum lift stopper.

15.Check the worm wheel stopping at the position, as shown in the illustration, lightly touching to the minimum lift stopper. Check that the feeler gauge is securely inserted.

16.Check that the dial gauge reading is within the standard value.

Standard value: -0.11 ± 0.03 mm

NOTE: By inserting the 0.15 mm feeler gauge, the 0.26 mm-stroke occurs at the rocker arm adjusting screw side. Therefore, the valve clearance at the inlet side can be calculated by the following calculating formula using the dial gauge reading.

CALCULATING FORMULA:
valve clearance = 0.26 mm + (dial gauge reading)
<Example > If the dial gauge reading is - 0.11 mm,
valve clearance = 0.26 mm + (- 0.11) = 0.15 mm

17.If the dial gauge reading is not within the standard value, perform the adjustment according to the following procedures.

18.Loosen the rocker arm lock nut at the forward engine side. Pull up the adjusting screw once. From the upper portion of the adjusting screw, sufficiently apply the engine oil between the lower adjusting screw end and the valve axis end so that the engine oil can be provided enough. And then, perform the adjustment by rotating the adjusting screw so that the dial gauge can read -0.11 mm.

19.After the adjustment, hold the driver to prevent the adjustment screw from rotating. Temporarily tighten the lock nut. Rotate the coupling anti-clockwise. Return the worm wheel to around the middle lift position. Pull out the feeler gauge.

20.For the valve at the backward engine side, check the valve clearance in the same procedure as that of the valve at the forward engine side. If the valve clearance is not within the standard value, perform the adjustment in the same procedure as that of the valve at the forward engine side.

21.After the adjustment, hold the driver to prevent the adjustment screw from rotating. Tighten the lock nut to the specified torque. And then, check that the dial gauge reading does not change.

Tightening torque: 9.0 ± 1.0 N·m

22.Check again the valve clearance at the forward engine side. If the valve clearance is not within the standard value, perform the adjustment in the same procedure as the first adjustment.

23.After the adjustment, hold the driver to prevent the adjustment screw from rotating. Tighten the lock nut to the specified torque. And then, check that the dial gauge reading does not change.

Specified torque: 9.0 ± 1.0 N·m

24.Rotate the coupling anti-clockwise. Return the worm wheel to around the middle lift position. Pull out the feeler gauge.

25.For the No. 2 cylinder inlet valve, check and adjust the valve clearance according to the procedures from Step 11 to Step 24.

26.For the No. 1 and No.3 cylinder exhaust valves, check and adjust the valve clearance according to the following procedures.

27.Insert the feeler gauge between the exhaust valve axis end and the adjusting screw. Measure the valve clearance.

Standard value: 0.20 ± 0.03 mm

28.If the valve clearance is not within the standard value, loosen the lock nut. Adjust the adjusting screw so that the valve clearance can be within the standard value.

29.After the adjustment, hold the driver to prevent the adjustment screw from rotating. Tighten the lock nut to the specified torque.

Tightening torque: 9.0 ± 1.0 N·m

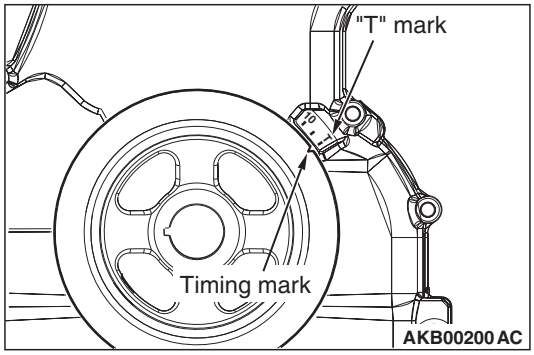

30.Rotate the crankshaft clockwise once. Align the crankshaft pulley timing mark (notch) with the "T" mark of the timing chain case. Therefore, the No. 4 cylinder is set at the top dead centre on its compression stroke.

31.For the No. 3 cylinder inlet valve, check and adjust the valve clearance according to the procedures from Step 11 to Step 24.

32.For the No. 4 cylinder inlet valve, check and adjust the valve clearance according to the procedures from Step 11 to Step 24.

33.For the No. 2 and No. 4 cylinder exhaust valves, check and adjust the valve clearance according to the procedures from Step 27 to Step 29.

34.Remove the special tool and return the engine harness to the original state.

35.Install the rocker cover assembly.

36.Install the ignition coils.

37.Install the motor bracket and the valve lift control motor.

A5. CHECK RADIATOR HOSES FOR DAMAGE AND PROPER CONNECTION

M6020200901151

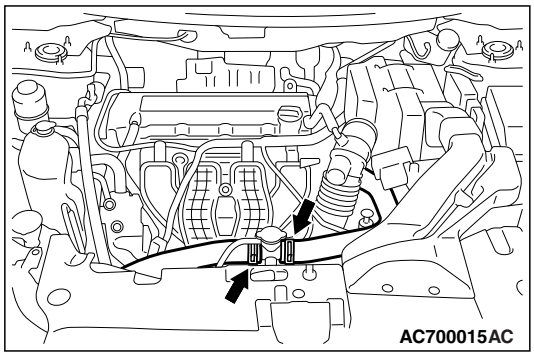

1. Check entire circumference and length of hoses, using a mirror as required.
2. Check that hoses installed in grommets pass through the centre of the grommets.
3. Check all clamps for tightness and connections for leakage.

A6. CHECK ENGINE COOLANT LEVEL IN RESERVOIR

M6020201001106

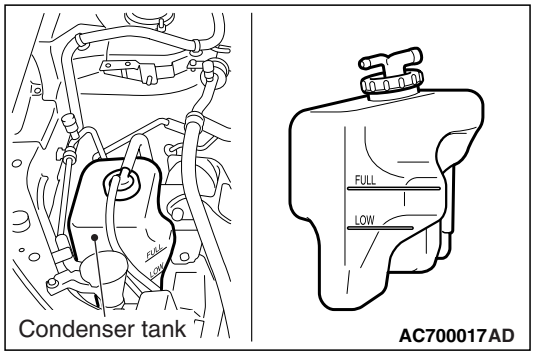

Check that the coolant level is between the "FULL" and "LOW" lines when the engine is at the normal operating temperature.

A7. CHANGE ENGINE COOLANT

M6020201101738

ENGINE COOLANT REPLACEMENT <4A9>

⚠ ***WARNING***

When removing the radiator cap, use care to avoid contact with hot engine coolant or steam. Place a shop towel over the radiator cap and turn the radiator cap anti-clockwise a little to let the pressure escape through the vinyl tube. After relieving the steam pressure, remove the radiator cap by slowly turning it anti-clockwise.

1. Drain the engine coolant from the radiator, heater core and engine after unplugging the radiator drain plug and removing the radiator cap.

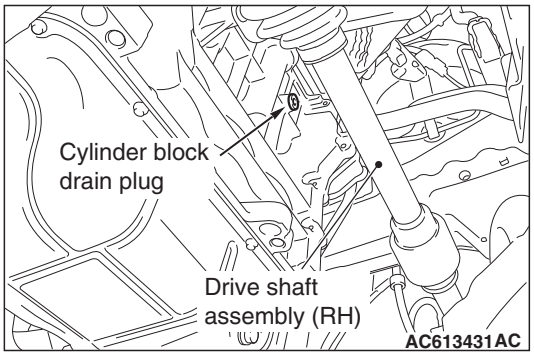

2. Drain the engine coolant in the water jacket by unplugging the cylinder block drain plug.
3. Remove the radiator condenser tank and drain the engine coolant.

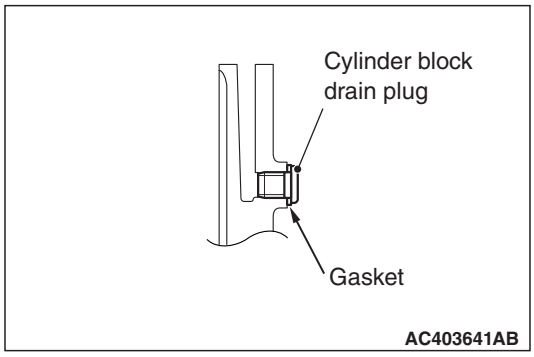

4. Replace the gasket, and tighten the cylinder block drain plug to the specified torque.

   Tightening torque: 27 ± 3 N·m

5. Securely tighten the radiator drain plug.
6. Reinstall the radiator condenser tank.

⚠ **CAUTION**

Do not use alcohol or methanol anti-freeze or any engine coolant mixed with alcohol or methanol anti-freeze. The use of an improper anti-freeze can cause corrosion of the aluminium components.

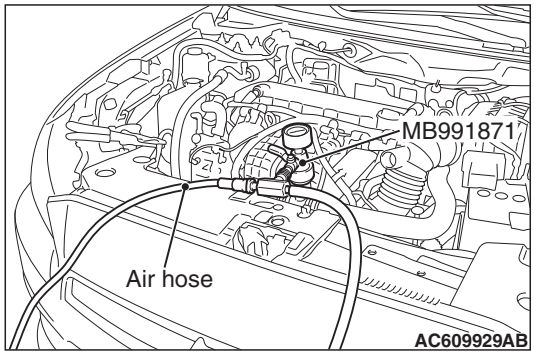

7. Use special tool LLC changer (MB991871) to refill the engine coolant up to the top of the radiator port.

   Recommended antifreeze: MITSUBISHI MOTORS GENUINE SUPER LONG LIFE COOLANT PREMIUM or equivalent*

   NOTE: *similar high quality ethylene glycol based non-silicate, non-amine, non-nitrate and non-borate coolant with long life hybrid organic acid technology.

   Quantity: 6.0 L
   (includes 0.65 L in the radiator condenser tank)

   NOTE: For how to use special tool MB991871, refer to its manufacturer's instructions.

8. Tighten the radiator cap securely.
9. Remove the radiator condenser tank cap, and add the engine coolant up to the "FULL" line.

10.Turn the A/C switch to OFF position to start the engine and warm up until the radiator fan operates.

NOTE: This work is to open the thermostat fully.

11.Rev the engine several times and then stop it. Check that there are no engine coolant leaks.

12.Remove the radiator cap with the engine cool, and then refill the engine coolant up to the top of the radiator port.

13.Tighten the radiator cap securely.

⚠ CAUTION

Do not overfill the radiator condenser tank.

14.Remove the radiator condenser tank cap, and add the engine coolant up to the "FULL" line.

ENGINE COOLANT REPLACEMENT <4B1, 4J1>

1. Remove the engine room under cover front A.

⚠ WARNING

When removing the radiator cap, use care to avoid contact with hot engine coolant or steam. Place a shop towel over the radiator cap and turn the radiator cap anti-clockwise a little to let the pressure escape through the vinyl tube. After relieving the steam pressure, remove the radiator cap by slowly turning it anti-clockwise.

2. Drain the engine coolant from the radiator, heater core and engine after unplugging the radiator drain plug and removing the radiator cap.
3. Remove the engine room under cover front B.

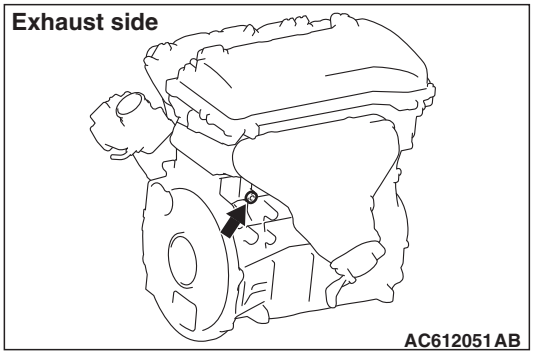

4. Drain the water in the water jacket by unplugging the drain plug of the cylinder block.
5. Remove the radiator condenser tank and drain the engine coolant.

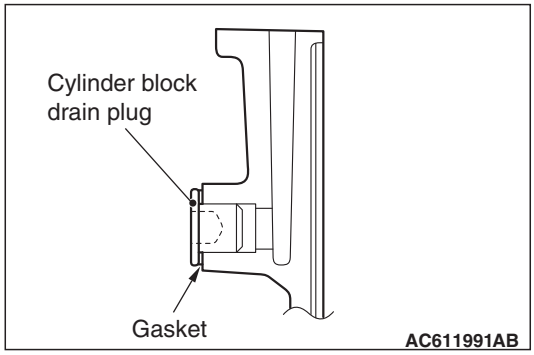

6. Replace the cylinder block drain plug gasket, and tighten the drain plug to the specified torque.

   Tightening torque: 39 ± 3 N·m

7. Securely tighten the radiator drain plug.
8. Reinstall the radiator condenser tank.

⚠ CAUTION

Do not use alcohol or methanol anti-freeze or any engine coolants mixed with alcohol or methanol anti-freeze. The use of an improper anti-freeze can cause corrosion of the aluminium components.

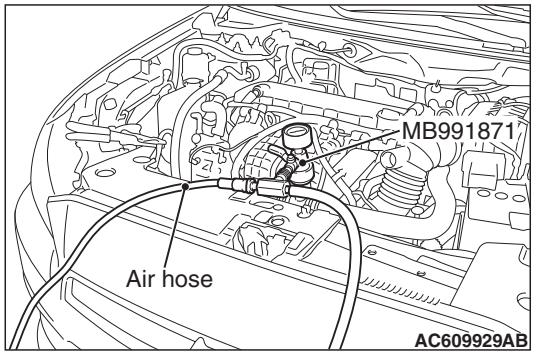

9. Use special tool LLC changer (MB991871) to refill the engine coolant up to the top of the radiator port.

   Recommended antifreeze: MITSUBISHI MOTORS GENUINE SUPER LONG LIFE COOLANT PREMIUM or equivalent*

   NOTE: *similar high quality ethylene glycol based non-silicate, non-amine, non-nitrate and non-borate coolant with long life hybrid organic acid technology.

   Quantity: 7.0 L
   (includes 0.65 L in the radiator condenser tank)

   NOTE: For how to use special tool MB991871, refer to its manufacturer's instructions.

10.Tighten the radiator cap securely.

11.Remove the radiator condenser tank cap, and add the engine coolant up to the "FULL" line.

12.Turn the A/C switch to OFF position to start the engine and warm up until the radiator fan operates.

NOTE: This work is to open the thermostat fully.

13.Rev the engine several times and then stop it. Check that there are no engine coolant leaks.

14.Remove the radiator cap with the engine cool, and then refill the engine coolant up to the top of the radiator port.

15.Tighten the radiator cap securely.

⚠ CAUTION

Do not overfill the radiator condenser tank.

16.Remove the radiator condenser tank cap, and add the engine coolant up to the "FULL" line.

17.Reinstall the engine room under cover front A, B (Refer to WORKSHOP MANUAL GROUP 51– Under Cover).

ENGINE COOLANT REPLACEMENT <4N1>

1. Remove the engine room under cover front B.

⚠ WARNING

When removing the radiator condenser tank cap, use care to avoid contact with hot engine coolant or steam. Place a shop towel over the radiator condenser tank cap and turn the radiator condenser tank cap anti-clockwise a little to let the pressure escape through the vinyl tube. After relieving the steam pressure, remove the radiator condenser tank cap by slowly turning it anti-clockwise.

2. Drain the engine coolant from the radiator, heater core and engine after unplugging the radiator drain plug and removing the radiator cap.
3. Remove the catalytic converter assembly.

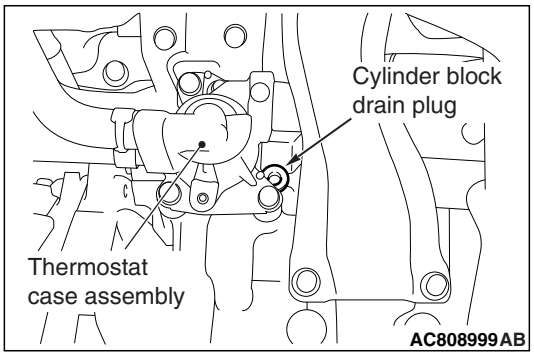

4. Drain the engine coolant in the water jacket by unplugging the cylinder block drain plug.
5. Remove the radiator condenser tank and drain the engine coolant.
6. Reinstall the radiator condenser tank.
7. Replace the gasket, and tighten the cylinder block drain plug to the specified torque.

   Tightening torque: 39 ± 3 N·m

8. Install the catalytic converter assembly.
9. Securely tighten the radiator drain plug.

⚠ CAUTION

Do not use alcohol or methanol anti-freeze or any engine coolants mixed with alcohol or methanol anti-freeze. The use of an improper anti-freeze can cause corrosion of the aluminium components.

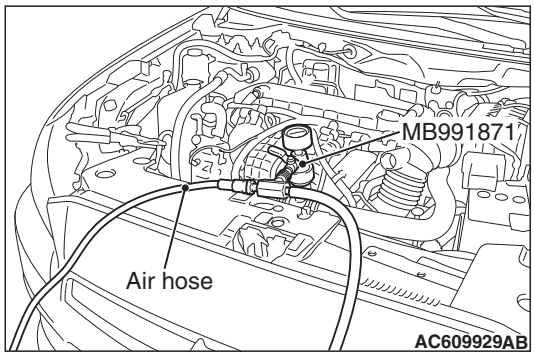

10.Use special tool LLC changer (MB991871) to refill the engine coolant up to the top of the radiator port.

Recommended antifreeze: MITSUBISHI MOTORS GENUINE SUPER LONG LIFE COOLANT PREMIUM or equivalent*

NOTE: *similar high quality ethylene glycol based non-silicate, non-amine, non-nitrate and non-borate coolant with long life hybrid organic acid technology.

Quantity: 7.5 L
(includes 0.65 L in the radiator condenser tank)

NOTE: For how to use special tool MB991871, refer to its manufacturer's instructions.

11.Tighten the radiator cap securely.

12.Turn the A/C switch to OFF position to start the engine and warm up until the radiator fan operates.

NOTE: This work is to open the thermostat fully.

13.Rev the engine several times and then stop it. Check that there are no engine coolant leaks.

⚠ CAUTION

Do not overfill the radiator condenser tank.

14. Remove the radiator condenser tank cap with the engine cool, and then refill the engine coolant again to the "FULL" line of the radiator condenser tank.
15. Reinstall the engine room under cover front B.

A8. CHECK AIR CLEANER ELEMENT FOR CLOGGING AND DAMAGE

M6020201200862

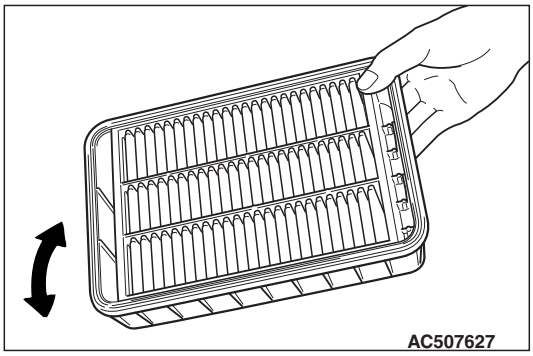

1. Check air cleaner element for clogging and damage.
2. Clean deposited dust from the element in the following manner.
   (1) Lightly tap the element against the top of a bench.
   (2) Blow compressed air from inside the element.
3. Wipe off dust on the air cleaner interior.
4. Install the air cleaner body.

A9. REPLACE AIR CLEANER ELEMENT

M6020201301022

The air cleaner element will become dirty and loaded with dust during use, and the filtering effect will be substantially reduced. Replace it with a new one.

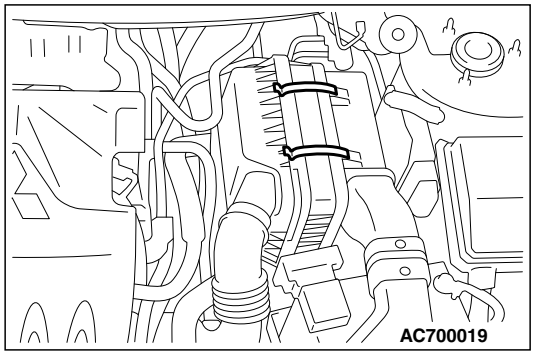

1. Unclasp the air cleaner cover clip.
2. Remove the air cleaner element and install a new one.
3. Be sure to close the air cleaner cover completely when clamping it.

A10. CHECK FLUID LEVEL IN BRAKE RESERVOIR AND CLUTCH RESERVOIR

M6020203000284

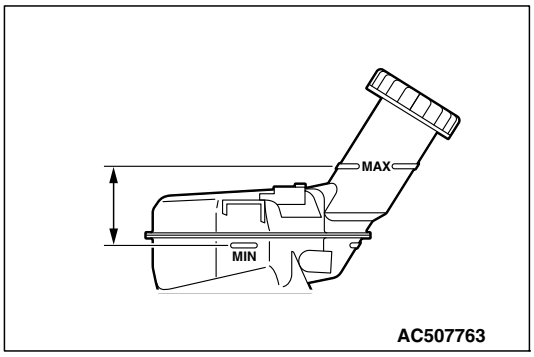

1. Check that the fluid level is between the "MAX" and "MIN" mark.
2. If it is below the "MIN" marks, replenish with fresh brake fluid up to the "MAX" mark.

A11. CHANGE BRAKE FLUID

M6020201601001

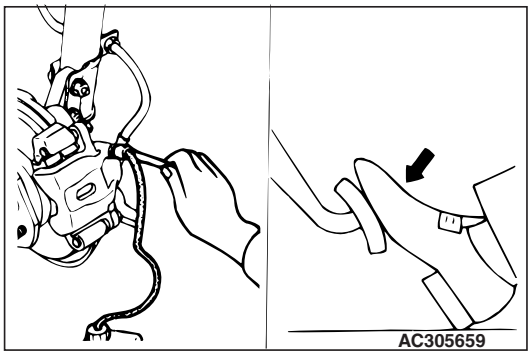

1. Remove the cap of the bleeder screw, connect a vinyl tube, and place its other end in a receptacle.

⚠ CAUTION

If the reservoir tank completely runs out of fluid during operation, air will find way into the brake line. Pay attention, therefore, to the fluid level and replenish as necessary.

2. Loosen the bleeder screw and depress the brake pedal; supply new brake fluid when the level of the fluid within the reservoir tank decreases.

   Specified brake fluid: DOT3 or DOT4

⚠ CAUTION

Use the specified brake fluid. Avoid using a mixture of the specified brake fluid and other fluid. If brake fluid is exposed to the air, it will absorb moisture; as water is absorbed from the atmosphere, the boiling point of the brake fluid will decrease and the braking performance will be seriously impaired. For this reason use a hermetically sealed 1 L or 0.5 L brake fluid container. Firmly close the cap of the brake fluid container after use.

3. When fresh fluid has come to flow out from the vinyl tube, tighten the bleeder screw.

   NOTE: This change from existing to fresh fluid can be judged by change in colour of fluid that flows out.

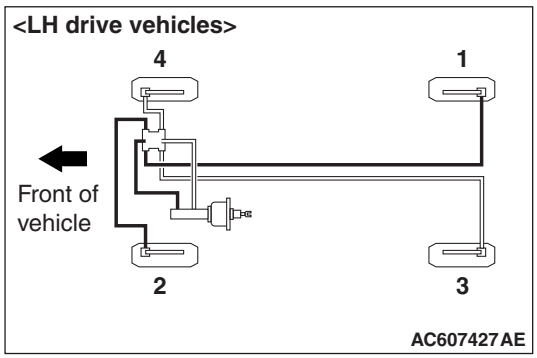

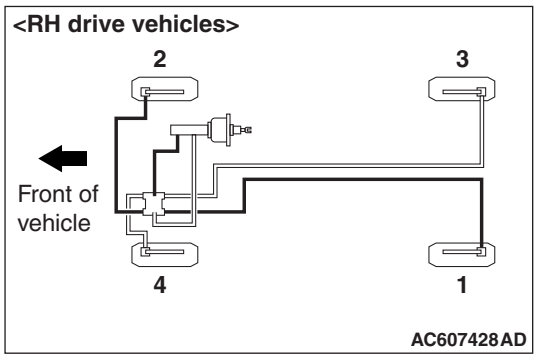

4. Repeat above steps for other bleeder screws.

MASTER CYLINDER BLEEDING

When removed the master cylinder assembly, bleed the master cylinder in the following procedure to make bleeding of the brake pipeline easier (When no brake fluid is in the master cylinder).

1. Fill the brake fluid reservoir with brake fluid.
2. Depress and hold the brake pedal.

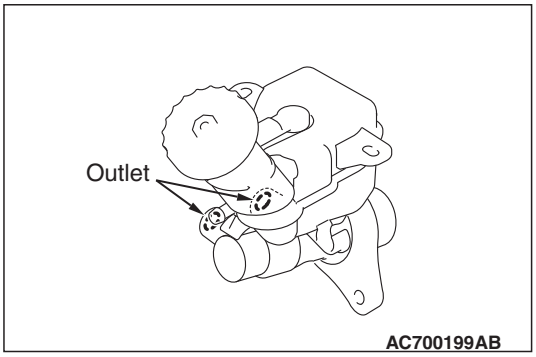

3. Another operator closes the master cylinder outlets with his fingers.
4. In this condition, release the brake pedal.
5. Repeat Steps 2 to 4 for 3 or 4 times to fill the master cylinder with brake fluid.

A12. CHECK BATTERY CONDITION

M6020203100270

⚠ CAUTION

- **If the battery fluid is below the LOWER LEVEL, the battery could explode in using.**
- **If the battery fluid is over the UPPER LEVEL, leakage could result.**

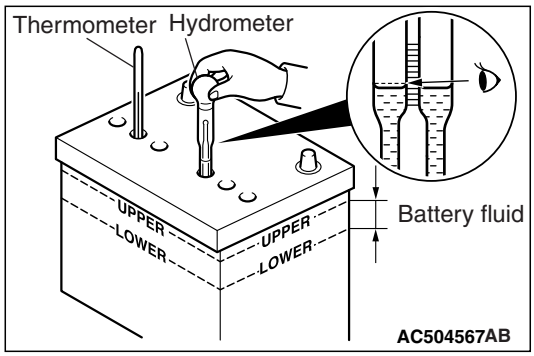

1. Inspect whether or not the battery fluid is between the UPPER LEVEL and LOWER LEVEL marks.
2. Use a hydrometer and thermometer to check the specific gravity of the battery fluid.

   Standard value: 1.220 – 1.290 (electrolyte temperature 20°C)

3. The specific gravity of the battery fluid varies with the temperature, so use the following formula to calculate the specific gravity for 20°C. Use the calculated value to determine whether or not the specific gravity is satisfactory.

   D20 = (t - 20) × 0.0007 + Dt
   D20: Specific gravity converted to a value for electrolyte temperature of 20°C.
   t: Electrolyte temperature at the time of measurement
   Dt: Actual specific gravity

A13. REPLACE FUEL FILTER

M6020201901187

<Petrol-powered vehicles>

1. Remove the rear seat cushion assembly.

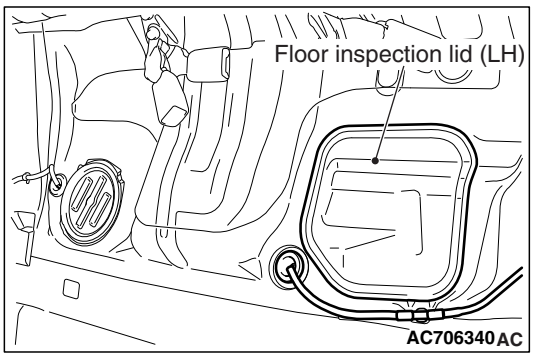

2. Remove the floor inspection lid (LH).

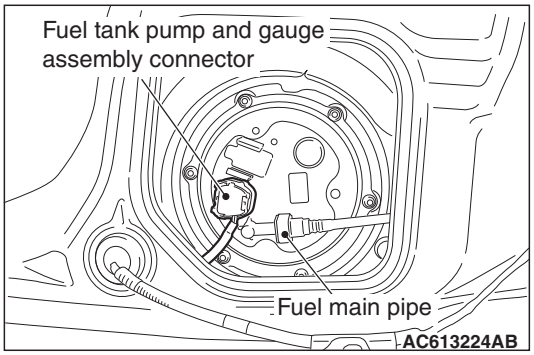

3. Disconnect the fuel tank pump and gauge assembly connector.
4. Release the fuel pressure in the fuel line.

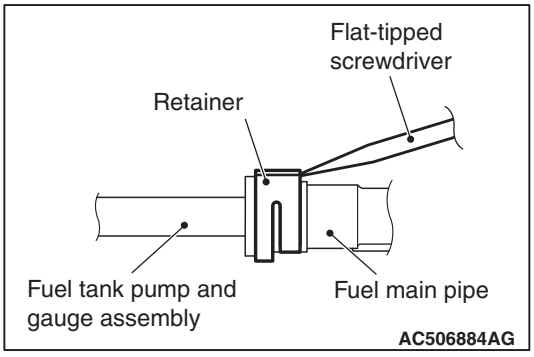

5. Insert a flat-tipped screwdriver (6 mm wide and 1 mm thick) into the retainer of the fuel main pipe.

⚠ CAUTION

When pushing up the retainer of the fuel high-pressure hose connector, pay attention to avoid damage to the retainer.

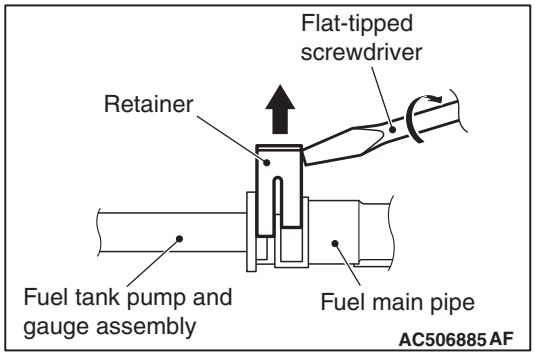

6. Turn the flat-tipped screwdriver inserted into the retainer by 90 degrees to push up the retainer, and disconnect the fuel main pipe from the fuel tank pump and gauge assembly.
7. Remove the mounting nuts of fuel tank pump and gauge assembly.

⚠ CAUTION

Pay attention not to damage the fuel gauge unit and float of the fuel tank pump and gauge assembly when removing the fuel tank pump and gauge assembly from the fuel tank.

8. Remove the fuel tank pump and gauge assembly from service hole.

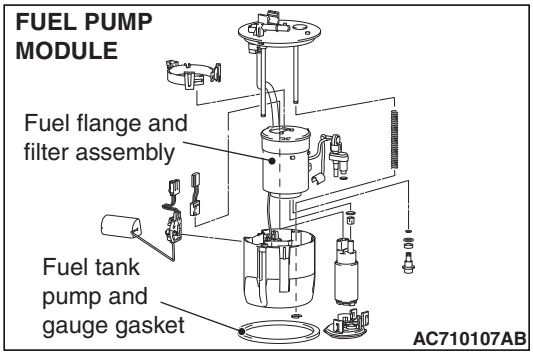

9. Replace the fuel flange and filter assembly and fuel tank pump and gauge gasket with a new one.

⚠ CAUTION

- **Pay attention not to damage the fuel gauge unit and the float of the fuel tank pump and gauge assembly when installing it to the fuel tank.**
- **When installing the fuel tank pump and gauge assembly to the fuel tank, check that the fuel gauge unit moving area moves smoothly.**

10.Install the fuel tank pump and gauge assembly to the fuel tank through the service hole, and tighten the mounting nuts to the specified torque.

Tightening torque: 2.5 ± 0.4 N·m

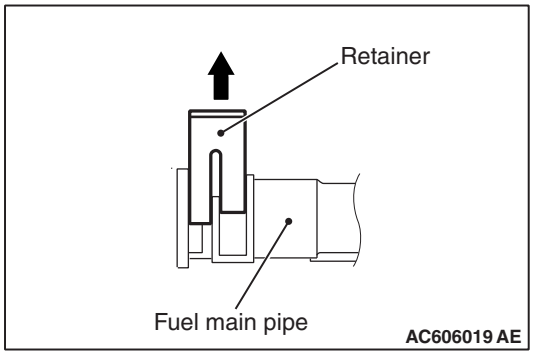

11.Before the installation, push up the retainer of the fuel main pipe.

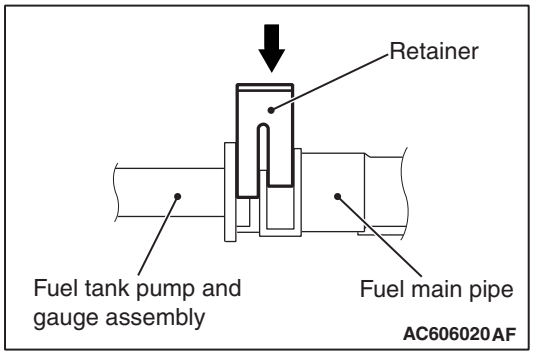

12.Connect the connector of fuel main pipe to the fuel tank pump and gauge assembly securely and push down the retainer of the connector to lock it firmly.

13.After the installation, slightly pull the fuel main pipe to check that it is connected securely. At this time, also check that there is approximately 1 mm play.

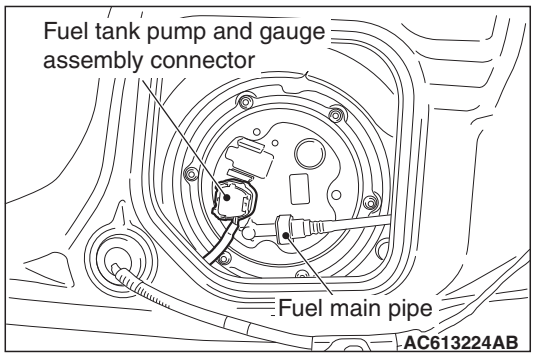

14.Connect the fuel tank pump and gauge assembly connector.

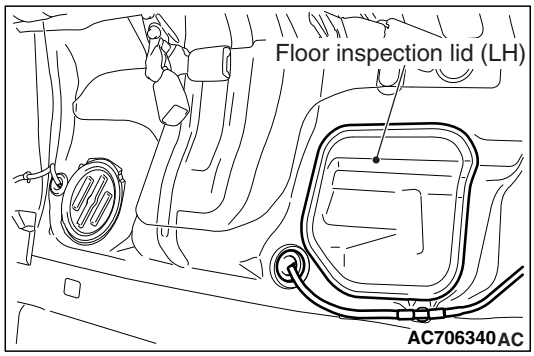

15.Install the floor inspection lid (LH).

16.Install the rear seat cushion assembly.

<Diesel-powered vehicles>

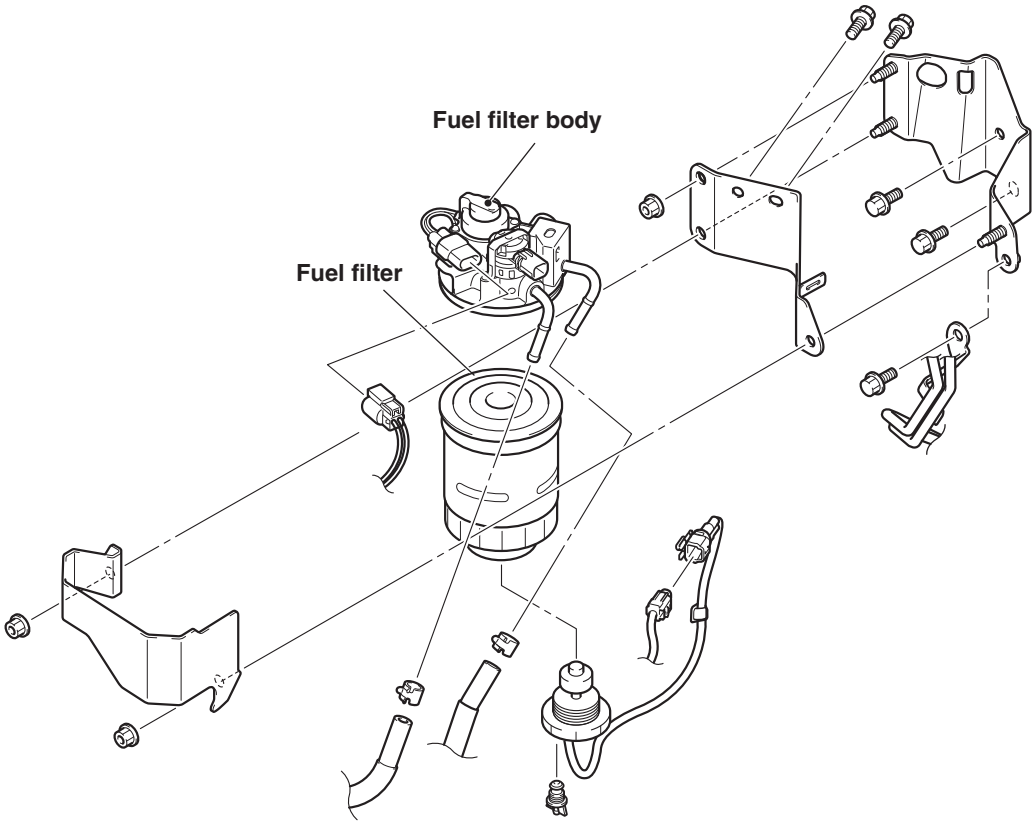

AC809283AC

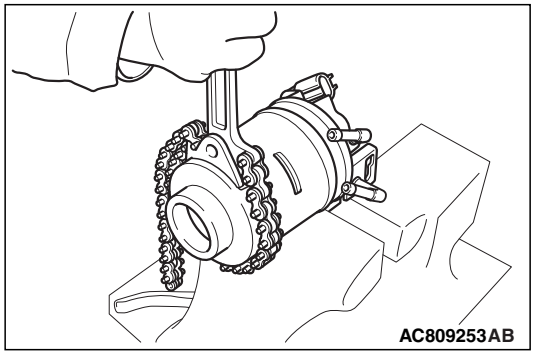

AC809253AB

1. Fix the fuel filter body to a vice, and then remove the fuel filter using an oil filter wrench.
2. Clean the mounting surface on the fuel filter body side.
3. Tighten the fuel filter to the specified torque from the point where the gasket contacts the mounting surface.

   Tightening torque: Approximately 3/4 turn (17 ± 2 N·m)

FUEL FILTER SENSOR CHECK

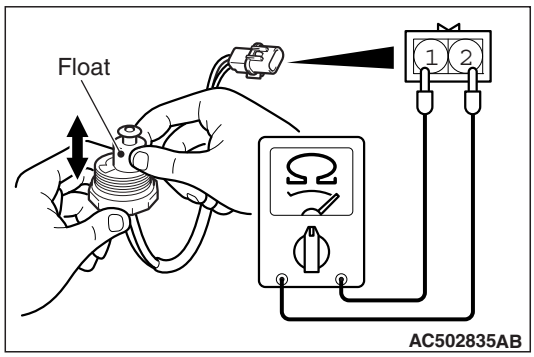

AC502835AB

1. Connect the circuit tester to the fuel filter sensor.
2. There should be continuity when the float is raised, while there is no continuity when it is lowered.
3. Replace the fuel filter sensor if it is faulty.

OPERATIONS UNDER THE VEHICLE

B1. CHECK SUSPENSION SYSTEM FOR DAMAGE AND LOOSENESS

M6020300100698

1. Check each portion of suspension for damage visually.
2. Check each installation bolt and nut for looseness by spanner or similar tool.

FRONT SUSPENSION

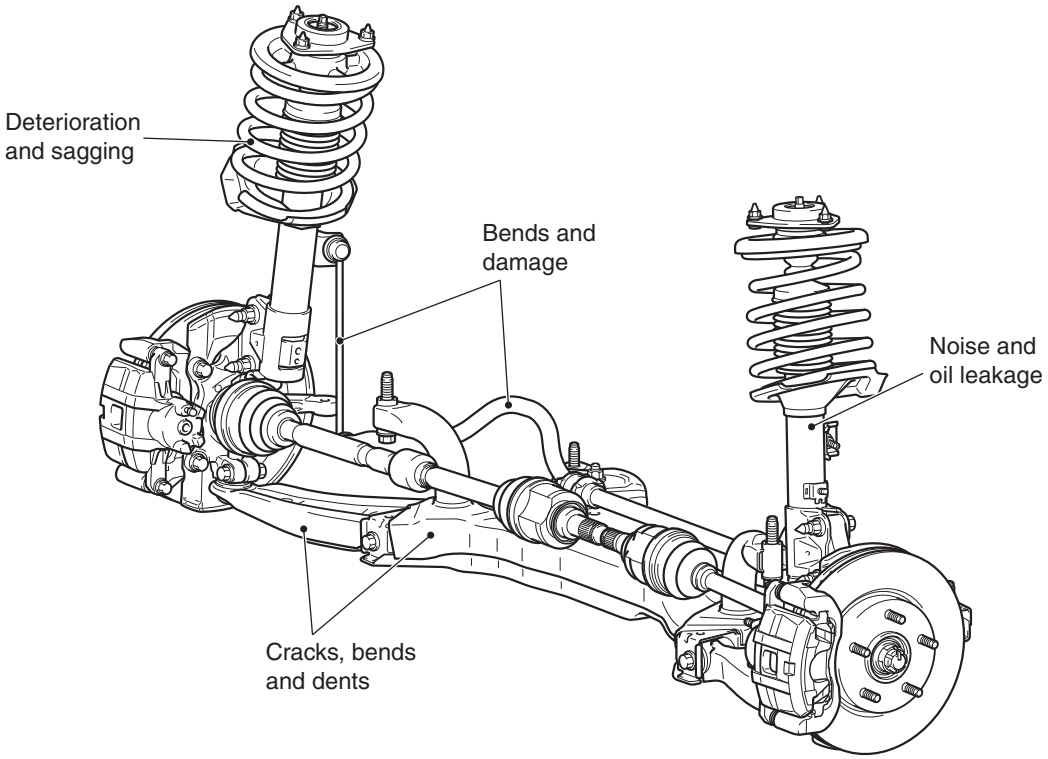

REAR SUSPENSION

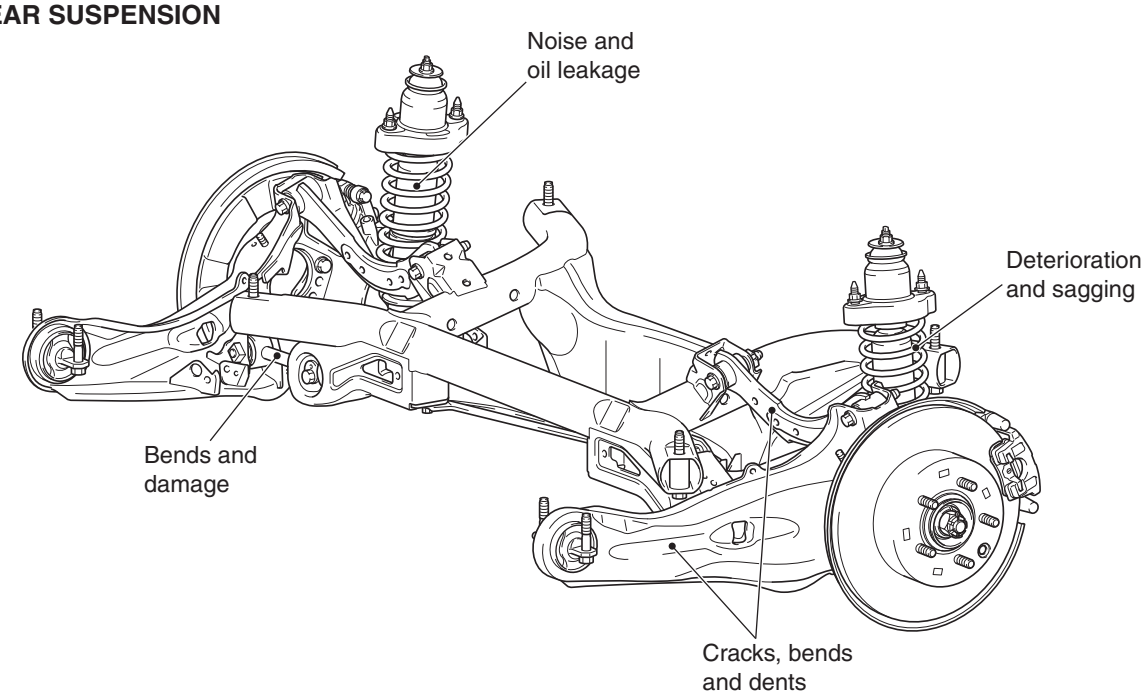

AC700172AB

B2. CHECK SUSPENSION ARM BALL JOINTS FOR PLAY, AND DUST COVERS FOR DAMAGE

M6020300200468

LOWER ARM BALL JOINT AXIAL PLAY CHECK

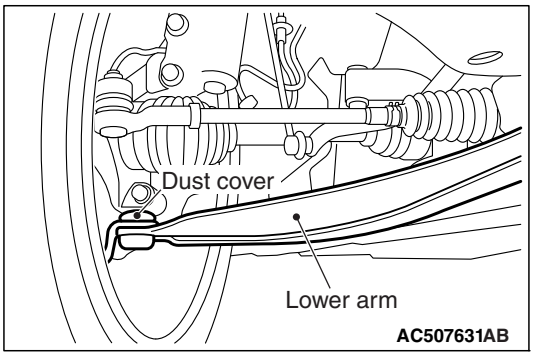

1. Raise the vehicle.
2. Move the lower arm up and down with your hands to check for an excessive play in the axial direction of the ball joint. If there is an excessive play, replace the lower arm assembly.

DUST COVERS FOR DAMAGE

1. Using your fingers, press the dust cover to check for a crack or damage.
2. If it dust cover has any crack or damage, replace the lower arm assembly.

   NOTE: If the dust cover has a crack or damage, the ball joint could be damaged.

B3. CHECK DRIVESHAFT BOOTS FOR DAMAGE

M6020300400387

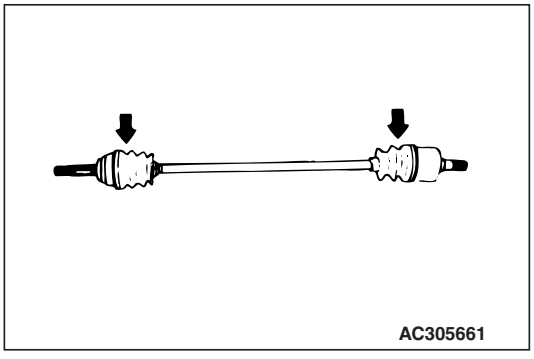

Check the driveshaft boots for damage.

B4. CHECK STEERING LINKAGE FOR DAMAGE AND LOOSE CONNECTIONS (including seals and boots)

M6020300500511

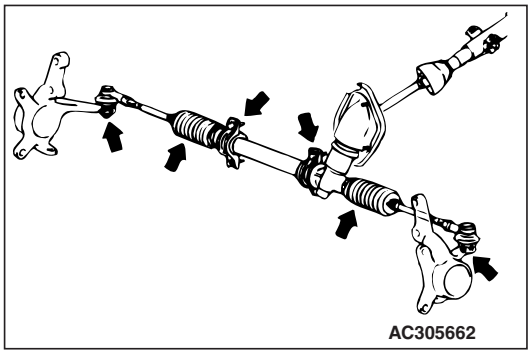

1. Move the steering wheel bit by bit to the left or right, and check to be sure that there is no play or looseness in the linkage coupling, that the installation is not loose, and that the rod or arm is not bent or damaged.

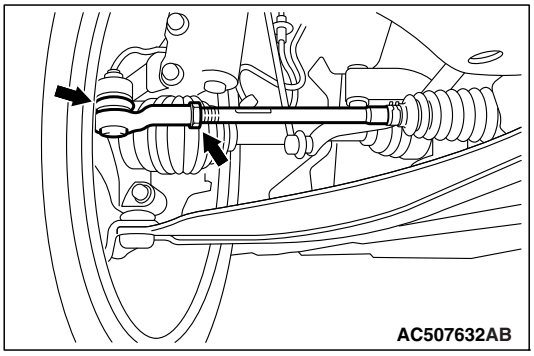

2. Check to be sure that the seal and boot of the ball joint are correctly installed (in the correct position), and that they are not damaged.
3. Check tie-rod end lock nut for looseness. If lock nut is loose, adjust toe-in and then tighten lock nut to the specified torque.

   Tightening torque: 52 ± 2 N·m

B5. CHECK MANUAL TRANSMISSION FOR OIL LEAKAGE (In case of leakage, check the oil level)

M6020302300450

CHECK OIL LEAKAGE

Check the transmission case for oil leakage visually or by touching it with hand.

NOTE: If an oil leakage is not detected, the oil level check is necessary.

TRANSMISSION OIL LEVEL CHECK

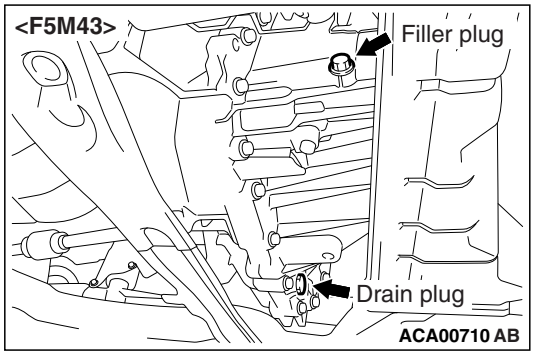

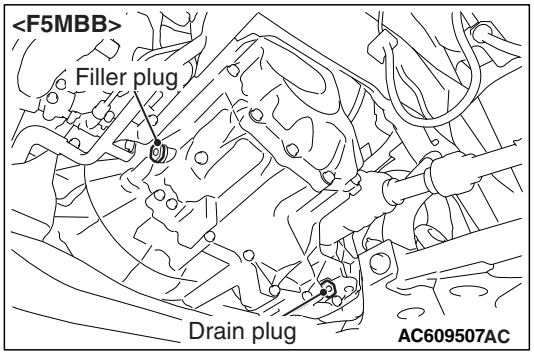

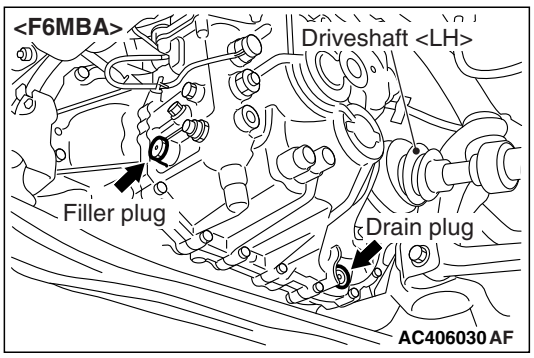

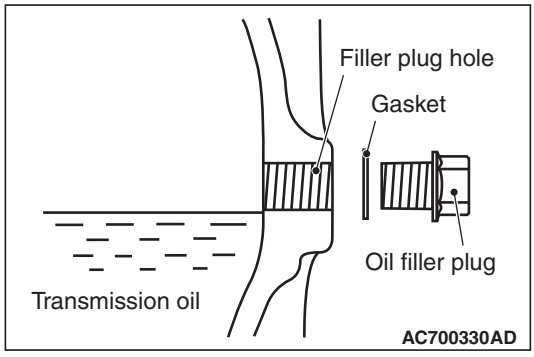

1. Remove the filler plug and gasket.
2. Check that the oil level is up to the lower edge of the filler plug hole.
3. Check that the oil is not noticeably dirty.
4. Tighten the filler plug and new gasket to the specified torque.

Tightening torque:
32 ± 2 N·m <F5M43>
49 ± 19 N·m <F5MBB>
39 ± 12 N·m <F6MBA>

B6. CHANGE GEAR OIL IN MANUAL TRANSMISSION

M6020300801151

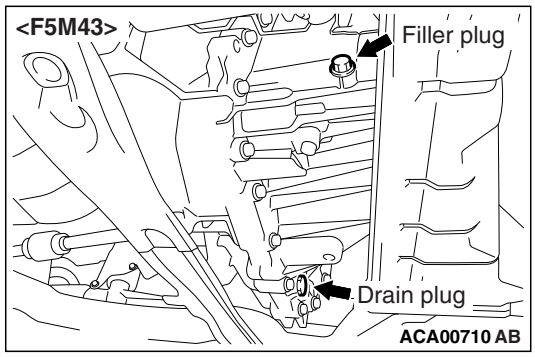

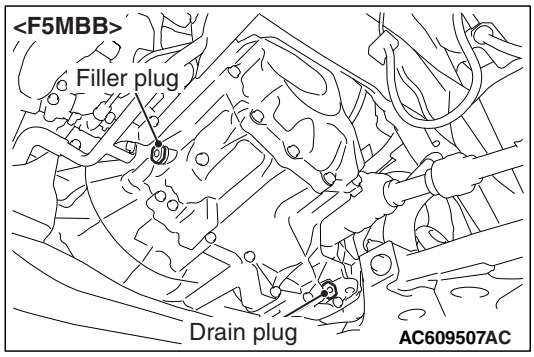

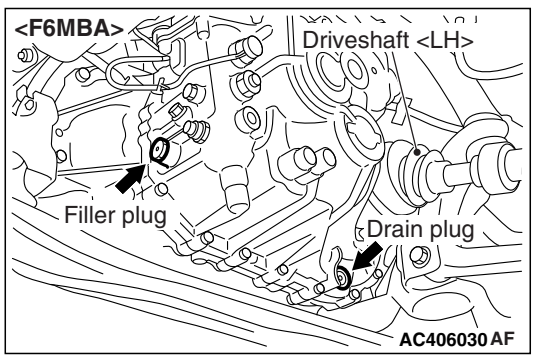

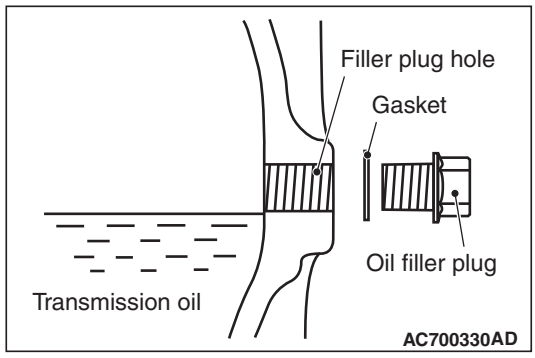

1. Remove the filler plug and gasket.

2. Remove the drain plug and gasket, and drain the oil.
3. Tighten the drain plug and new gasket, to the specified torque.

   Tightening torque:
   32 ± 2 N·m <F5M43>
   49 ± 19 N·m <F5MBB>
   39 ± 12 N·m <F6MBA>
4. Remove the filler plug and gasket, then fill the specified transmission oil up to the lower edge of the filler plug hole.

   Specified transmission oil: MITSUBISHI MOTORS GENUINE DiaQueen NEW MULTI GEAR OIL API classification GL-3, SAE 75W-80
   Quantity:
   2.0 L <F5M43>
   2.5 L <F5MBB>
   2.2 L <F6MBA>
5. Tighten the filler plug and new gasket to the specified torque.

   Tightening torque:
   32 ± 2 N·m <F5M43>
   49 ± 19 N·m <F5MBB>
   39 ± 12 N·m <F6MBA>

B7. CHECK EXHAUST PIPE CONNECTIONS FOR GAS LEAKAGE, AND CHECK PIPE INSTALLATION

M6020301200762

1. Confirm that the exhaust pipe does not interfere with any body components.
2. Check the exhaust pipe for damage by stones, etc.
3. Start the engine and check for gas leaks from the exhaust pipe connections.

OPERATIONS INSIDE THE VEHICLE

C1. CHECK BRAKE PEDAL AND CLUTCH PEDAL FOR FREE PLAY

M6020400101007

BRAKE PEDAL FREE PLAY

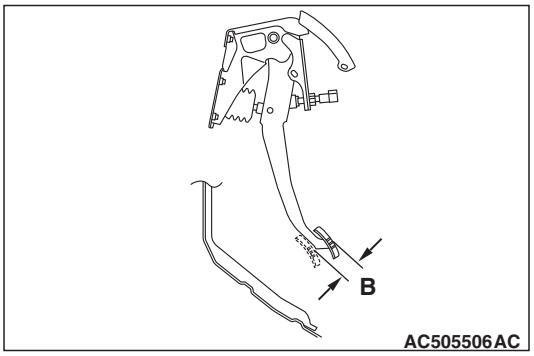

1. With the engine stopped, depress the brake pedal 2 or 3 times to release the vacuum in the brake booster. Then, press the brake pedal with your finger and check if the pedal stroke until the pedal becomes heavy (play) is within the standard value.

   Standard value (B): 3 – 8 mm
2. When the brake pedal play is not within the standard value, check the brake pedal-to-clevis pin looseness, clevis pin-to-booster operating rod looseness, brake pedal height, and stop lamp switch position, and adjust or replace as necessary.

CLEARANCE BETWEEN BRAKE PEDAL AND FLOOR PANEL

1. Turn up the floor carpet under the brake pedal.

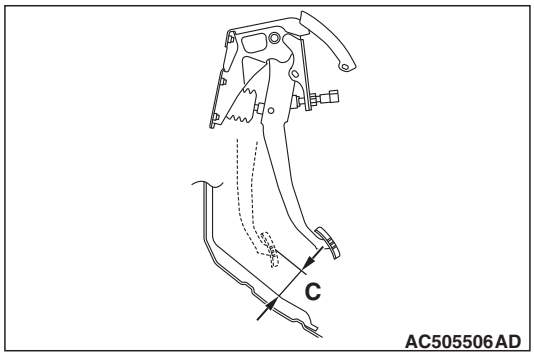

2. Start the engine and depress the brake pedal with approximately 500 N, and measure clearance between the brake pedal and the floor panel.

   Standard value (C): 85 mm or more
3. When the clearance is not within the standard value, check for air in the brake line and thickness of the disc brake pad, and correct or replace as necessary.
4. Recover the floor carpet under the brake pedal.

CLUTCH PEDAL CHECK AND ADJUSTMENT

NOTE: This clutch pedal assembly is unadjustable because of its structure.

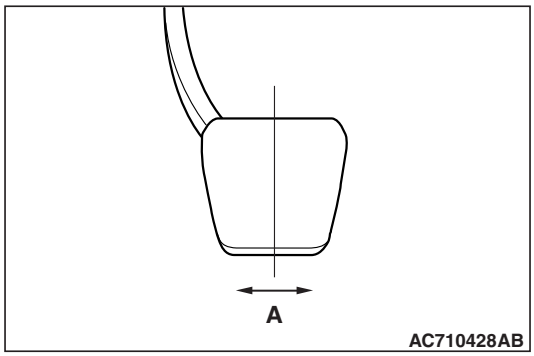

1. Measure the clutch pedal looseness (A).

   Standard value (A): 4 mm or less

2. When the clutch pedal looseness is not within the standard value, the clutch pedal assembly may be faulty. In this case, check the clutch pedal assembly, and replace it if necessary.

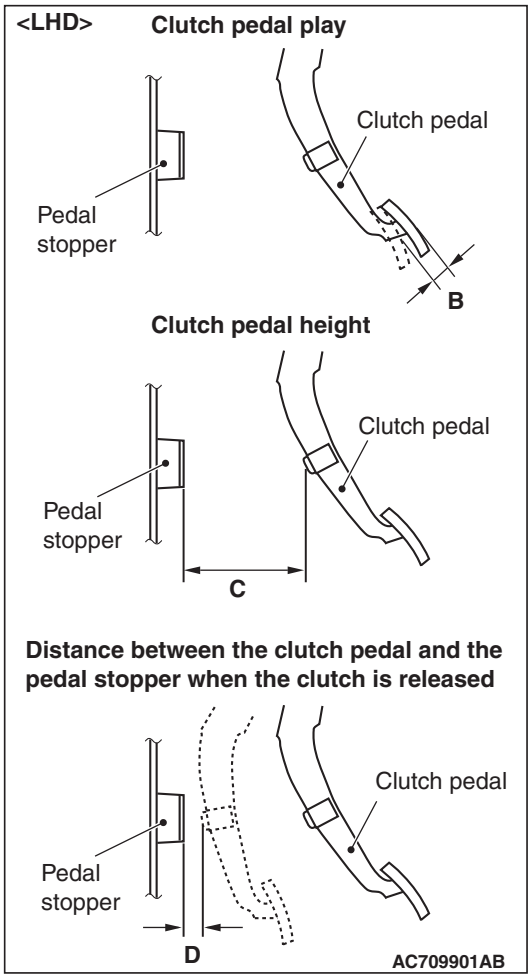

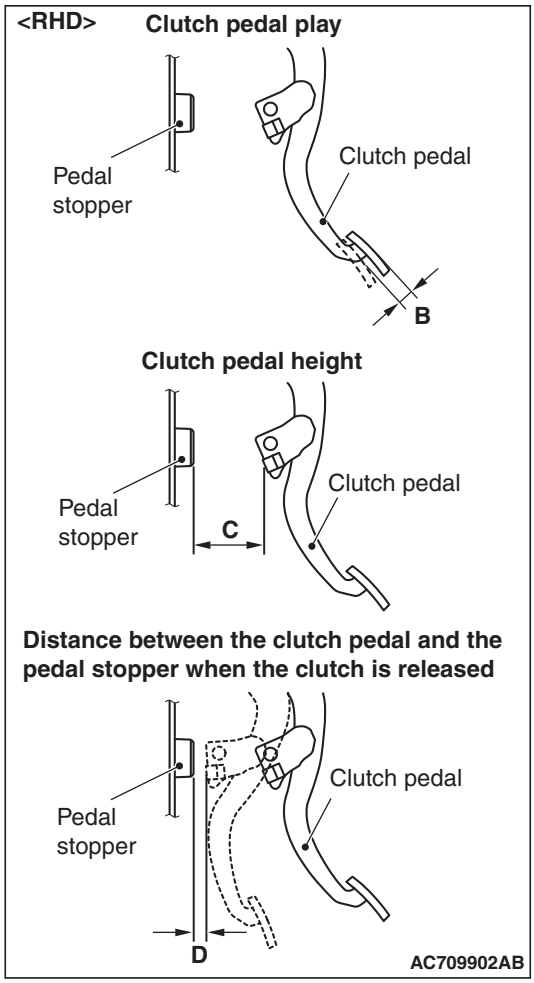

3. Check that the clutch pedal play (B), the clutch pedal height (C) and the clearance (D) between the clutch pedal and the pedal stopper when the clutch is disengaged are within the standard value.

   Standard value (B): 4 – 9 mm

   Standard value (C):
   99 – 105 mm <4A9-LHD, 4J1, 4B1>
   71.5 – 76 mm <4A9-RHD>
   110 – 116 mm <4N1-LHD>
   79.5 – 84 mm <4N1-RHD>

   Standard value (D):
   15 mm or more <LHD>
   11 mm or more <RHD>

4. When the clutch pedal play, clutch pedal height and the clearance between the clutch pedal and pedal stopper when the clutch is disengaged are not within the standard value, the air may be intruded into the hydraulic system, or either the clutch master cylinder or the concentric slave cylinder may be faulty. In this case, perform air bleeding, or check the clutch master cylinder or the concentric slave cylinder, and replace it if necessary.

C2. CHECK PARKING BRAKE LEVER STROKE AND PLAY

M6020400200755

Pull the parking brake lever with a force of approx. 200 N and count the number of notches.

Standard value: 3 – 5 notches

If the parking brake lever stroke is out of the standard range, adjust as described below:

1. Remove the floor console box cup holder.

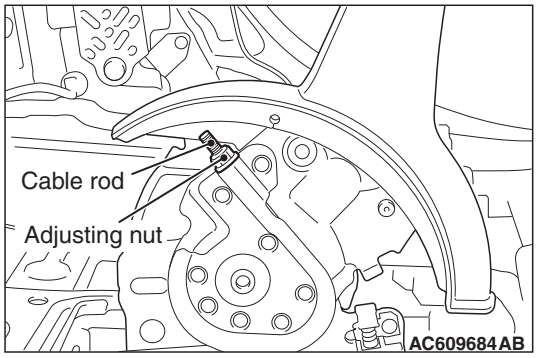

2. Loosen the adjusting nut to the end of the cable rod in order to allow slack in the cables.

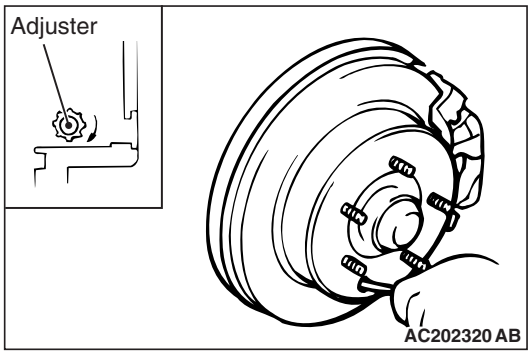

3. Remove the rear brake disc adjusting hole plug. Then insert a flat-tipped screwdriver to turn the adjuster to the arrow direction (to expand the shoe) until the parking brake shoe makes contact and the disc can no longer be turned. Back off the adjuster to the opposite direction by five notches.

⚠ CAUTION

Be careful that the parking brake lever notch number should be within the standard range. If the notch number is too low, rear brake dragging can be caused.

4. Adjust the parking brake lever stroke to the standard value by turning the adjusting nut. After adjustment, check that there is no free play between the adjusting nut and the parking brake lever.
5. After the parking brake lever stroke is adjusted, raise the rear of the vehicle. Release the parking brake, and turn the rear wheels to confirm that the rear brakes are not dragging.

C3. REPLACE AIR PURIFIER FILTER

M6020400300310

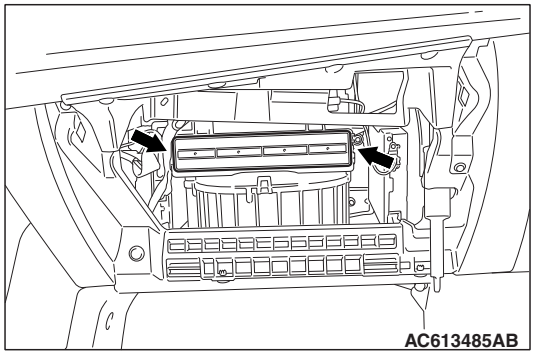

1. Remove the glove box.
2. Remove the air purifier cover and the air purifier assembly.
3. Install a new air purifier assembly and install the air purifier cover.
4. Install the glove box.

OPERATIONS OUTSIDE THE VEHICLE

D1. CHECK WHEEL ALIGNMENT

M6020500101264

⚠ CAUTION

After the installation, perform a calibration for the ASC-ECU to learn the steering wheel sensor neutral point. <Vehicles with ASC>

FRONT WHEEL ALIGNMENT

Measure wheel alignment with alignment equipment on a level surface. The front suspension, steering system, wheels, and tires should be serviced to normal condition before measuring wheel alignment.

Toe-in

Standard value: 1 ± 2 mm

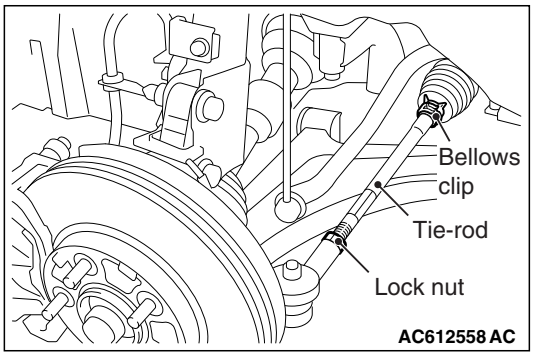

1. Adjust the toe-in by undoing the bellows clip and lock nut, and turning the left and right tie rod turnbuckles by the same amount (in opposite directions).

   NOTE: The toe will move out as the left turnbuckle is turned toward the front of the vehicle and the right turnbuckle is turned toward the rear of the vehicle.
2. Install the bellows clip and tighten the lock nut to the specified torque.

   Tightening torque: 52 ± 2 N·m
3. Confirm that the toe-in is at the standard value.

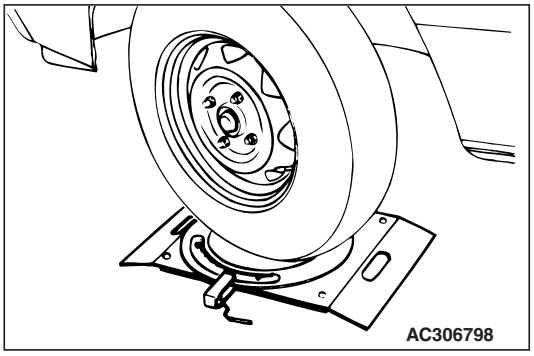

4. Use a turning radius gauge to check that the steering angle is at the standard value.

Standard value:

Item	Specification
Inner wheels	40°50' ± 1°30' (Difference between right and left wheels must be 2°00' or less.)
Outer wheels (for reference)	33°50'

Camber, caster and kingpin inclination

Standard value:

Item	Standard and sporty suspension	High-ground clearance suspension
Camber	–0°05' ± 0°30'*	0°10' ± 0°30'*
Caster	2°40' ± 0°30'*	2°30' ± 0°30'*
Kingpin inclination	13°30' ± 1°30'	13°10' ± 1°30'

*NOTE: The * Difference between right and left wheels must be less than 30'*

⚠ CAUTION

Do not apply the vehicle weight to the wheel bearing while loosening the driveshaft nut.

NOTE:

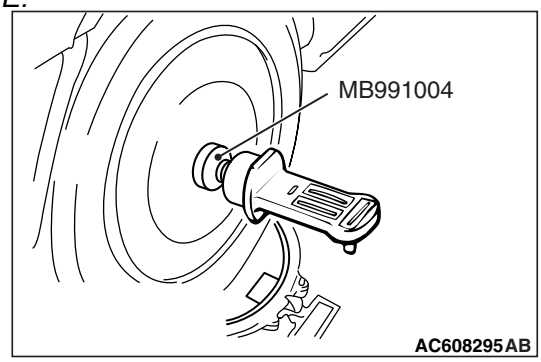

For vehicles with aluminium wheels, tighten special tool wheel alignment gauge attachment (MB991004) to the specified torque, then measure the camber.

Tightening torque: 250 ± 25 N·m

NOTE: The camber and the caster are pre-adjusted at factory and not adjustable.

REAR WHEEL ALIGNMENT

1. Before the wheel alignment measurement, adjust the rear suspension, wheel, and tires in good condition.
2. Park the vehicle on a level surface to measure the wheel alignment.

Toe-in

Standard value:
At the centre of tyre tread: 3 ± 2 mm
Toe-angle (per wheel): 0°02' – 0°13'

If toe-in is not within the standard value, adjust by following procedures.

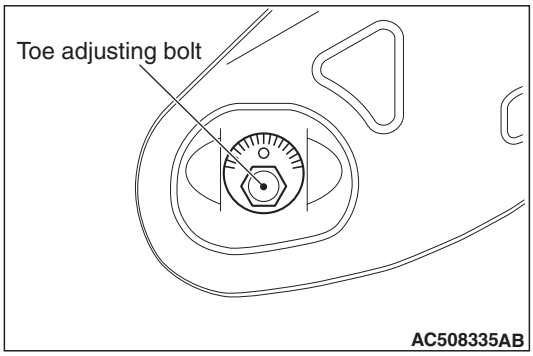

1. Turn the toe adjusting bolt (the mounting bolt inside the body on the control link) to adjust.

   Left wheel: Turning clockwise (+) toe-in
   Right wheel: Turning clockwise (-) toe-in

   NOTE: Toe-in varies approximately 2.6 mm (equivalent to 0°16' of the toe angle for one side) for each scale mark.

Camber

Standard value

Item	Standard and sporty suspension	High-ground clearance suspension
Camber	–0°55' ± 0°30'*	–0°35' ± 0°30'*

*NOTE: The * Difference between right and left wheels must be less than 30'*

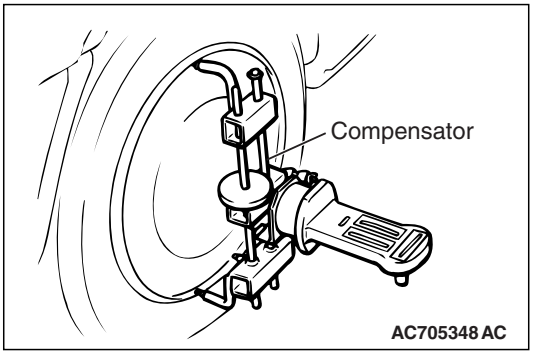

NOTE: For vehicles with aluminium wheels, attach the camber/caster/kingpin gauge by using a compensator.

NOTE: The camber is pre-adjusted at factory and is not adjustable.

D2. CHECK FRONT AND REAR WHEEL BEARINGS FOR PLAY

M6020500900223

<Front wheel>

1. Remove the caliper assembly, brake disc and retain it with a wire and the like to prevent from falling.

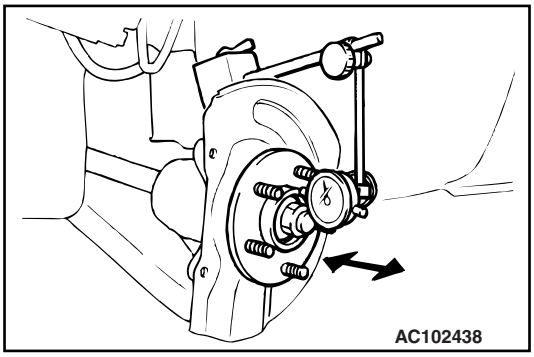

2. Set a dial gauge as shown in the figure. Move the hub in the axial direction and measure the axial play.

   Limit : 0.05 mm

3. If the play exceeds the limit, disassemble hub knuckle assembly to check each component. If the wheel bearing is faulty, replace it.

<Rear wheel>

1. Remove the caliper assembly and the brake disc. Retain the caliper assembly with a wire and the like to prevent from falling.

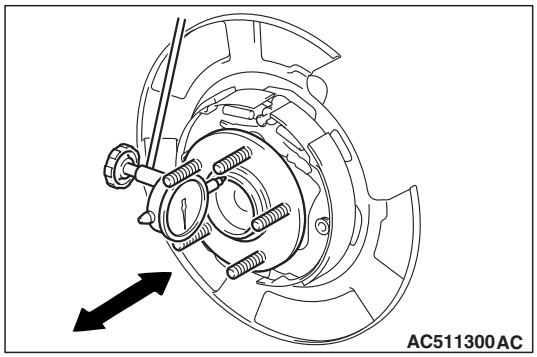

2. Set a dial gauge as shown in the figure. Move the hub in the axial direction and measure the looseness.

   Limit: 0.05 mm

3. When the looseness exceeds the limit, replace the rear wheel hub assembly.

D3. CHECK BRAKE HOSES AND PIPES FOR LEAKAGE

M6020500300403

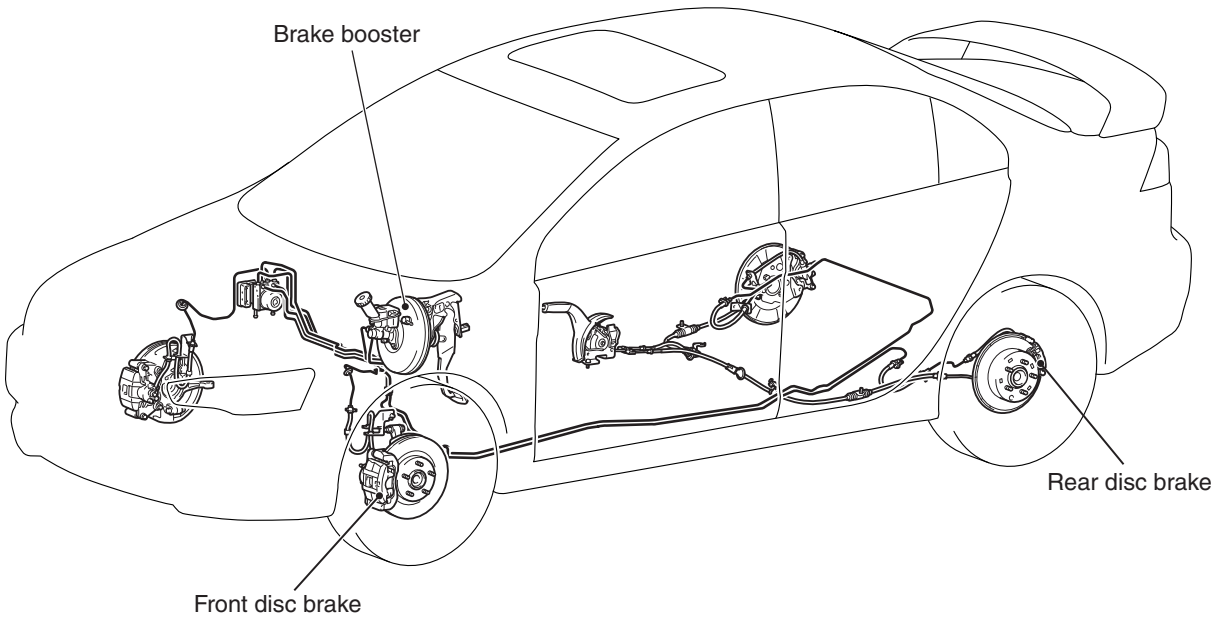

1. Check entire circumference and length of hoses and pipes.
2. Check all clamps for tightness and connections for leakage.

D4. CHECK BRAKE PADS AND DISCS FOR WEAR

M6020500400916

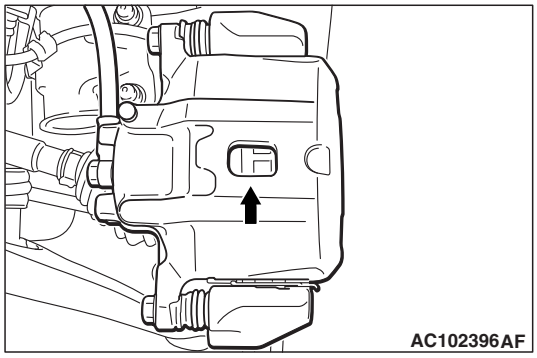

1. Check the brake pad thickness through the caliper body check port.

   Standard value: 10.0 mm
   Limit: 2.0 mm

2. When the thickness is less than the limit, always replace the pads at an axle set.

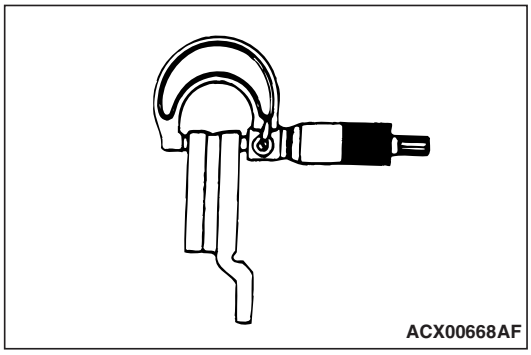

3. Using a micrometer, measure disc thickness at eight positions, approximately 45° apart and 10 mm in from the outer edge of the disc.

   Standard value:

Item	Brake disc thickness	Limit
Front	26.0 mm	24.4 mm
Rear	10.0 mm	8.4 mm

4. If the disk thickness is less than the limits, replace it with a new one.

BRAKE DISC RUN-OUT CHECK

1. Remove the brake assembly, and then hold it with wire.
2. Temporarily install the disc with the hub nut.

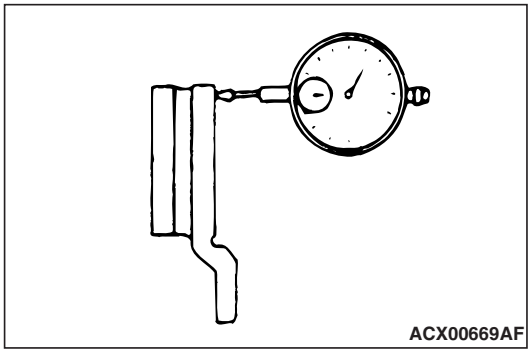

3. Place a dial gauge approximately 5 mm from the outer circumference of the brake disc, and measure the run-out of the disc.

   Limit:
   <Front> 0.06 mm
   <Rear> 0.08 mm

D5. CHECK BRAKE SHOE LININGS AND DRUMS (DRUM-IN-DISC) FOR WEAR

M6020500500805

BRAKE LINING THICKNESS CHECK

1. Remove the brake disc.

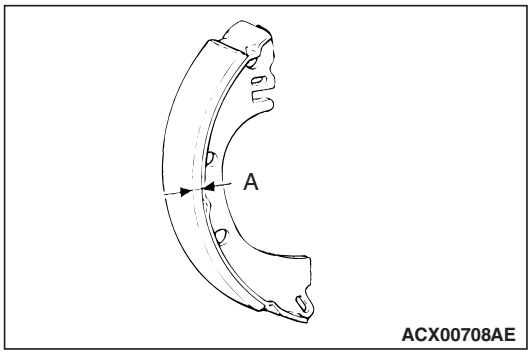

2. Measure the lining thickness at the most worn area.

   Standard value (A): 2.8 mm
   Limit (A): 1.0 mm

3. If the thickness is less than the limit value, replace the right and left shoe and lining assemblies as a set.

BRAKE DRUM (DRUM IN DISC) INSIDE DIAMETER CHECK

1. Remove the brake disc.

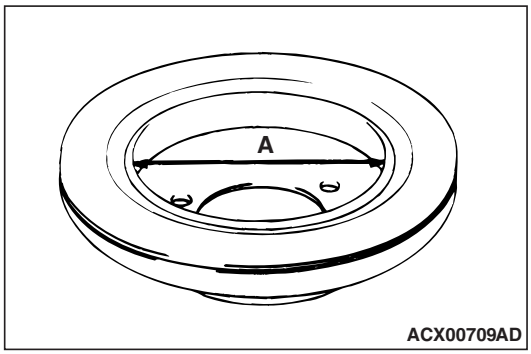

2. Measure the inside diameter of the brake disc at two positions or more.

   Standard value (A): 168.0 mm
   Limit (A): 169.0 mm

3. If the inside diameter is more than limit value or if there is excessive wear, replace the brake disc.

D6. CHECK FUEL HOSES AND PIPES FOR LEAKAGE OR DETERIORATION

M6020500600460

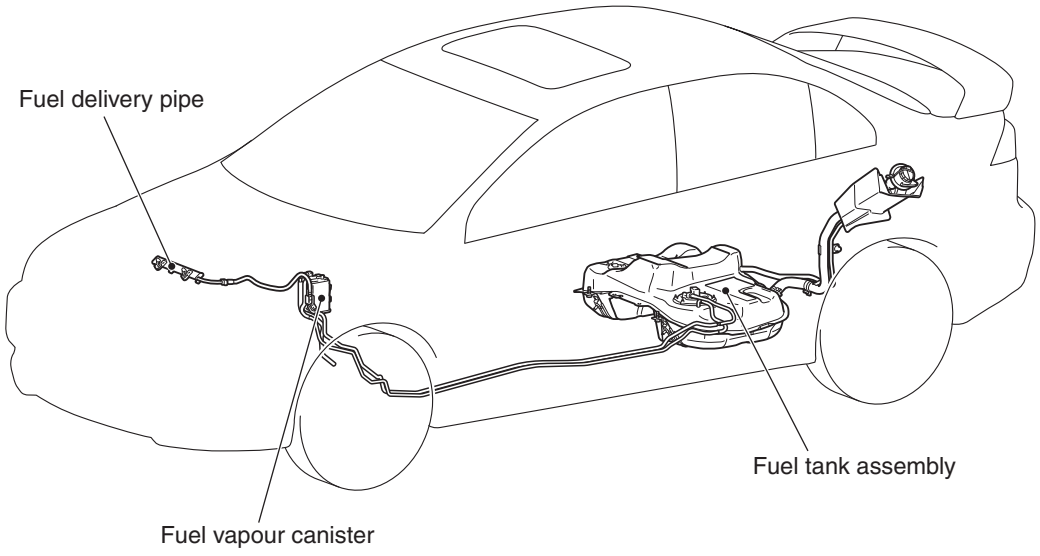

1. Check entire circumference and length of hoses and pipes.
2. Check all clamps for tightness and connections for leakage.

OPERATIONS AFTER ENGINE IS WARMED UP

E1. CHECK FLUID LEVEL IN AUTOMATIC TRANSMISSION AND CVT

M6020601400499

<F1CJA>

1. Drive the vehicle until the CVT fluid is warmed up to the normal operating temperature (70 to 80°C).

   NOTE: Use M.U.T.-III. to measure the CVT fluid temperature.

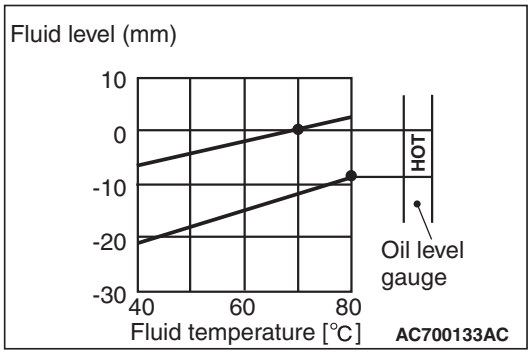

   NOTE: When a certain amount of time is required to warm up the CVT fluid to the normal operating temperature (70 to 80°C), check the oil level referring to the characteristics chart.
2. Park the vehicle on a level surface.
3. Move the selector lever to every position to fill the torque converter and the hydraulic circuit with the CVT fluid, and then move the selector lever to P range.
4. Pull out the oil level gauge, and wipe off the CVT fluid and dirt. then, insert the oil level gauge again and pull it out to check the condition of the CVT fluid.

   NOTE: If the CVT fluid smells burnt or is excessively deteriorated or dirty, the CVT fluid is contaminated with particles of the metal bushings and friction material. In these cases, the transmission must be overhauled.

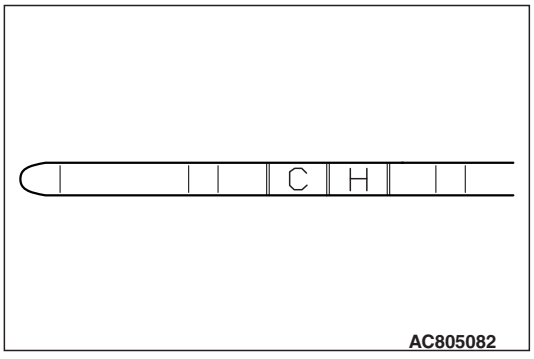

5. Check that the CVT fluid level is within the "H" area on the oil level gauge. If the fluid level is low, add the CVT fluid to the "H" level.

   Transmission fluid: MITSUBISHI MOTORS GENUINE CVTF-J4

   NOTE: When the CVT fluid level is low, the oil pump sucks air together with the CVT fluid, and produces air bubbles in the hydraulic circuit. The air bubbles in the hydraulic circuit decreases the hydraulic pressure, causing the delayed gearshift or slippage of the belt, clutch, and brake. When the CVT fluid level is too high, the fluid is stirred by the gear and foams up, and the problems similar to those when the CVT fluid level is low will occur. In either case, air bubbles cause the overheat and oxidation of the CVT fluid, which prevents normal operation of the valve, clutch, and brake. Beside, when the CVT fluid is foamy, it flows out of the transmission vent hole. This may be taken as the fluid leakage by mistake.
6. Insert the oil level gauge securely.

<F4A4A>

1. Drive the vehicle until the A/T fluid temperature reaches the normal temperature (70 – 80°C)

   NOTE: Use M.U.T.-III. to measure the A/T fluid temperature.

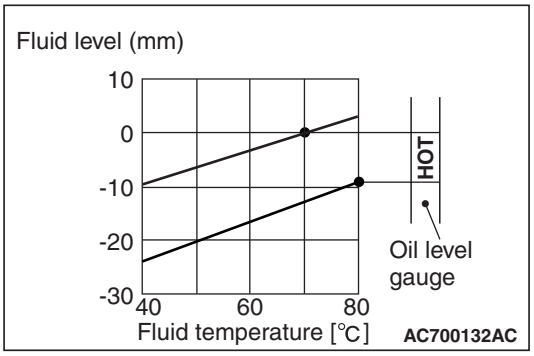

   NOTE: Check the oil level referring to the characteristics chart if it takes some time to reach the normal operation temperature of A/T fluid (70 – 80°C).
2. Park the vehicle on a level surface.
3. Move the selector lever to all positions to fully charge the torque converter and the fluid lines with A/T fluid, and then move the selector lever to the P position.
4. Pull out the oil level gauge, and wipe off the A/T fluid and dirt. Then, insert the oil level gauge again and pull it to check the condition of the A/T fluid.

NOTE: If the A/T fluid has a burnt smell, or if it has become very contaminated or dirty, it means that the A/T fluid has become contaminated by minute particles form bushings (metal) or worn parts. In such a case, the transmission needs to be overhauled and the A/T fluid cooler line needs to be flushed out.

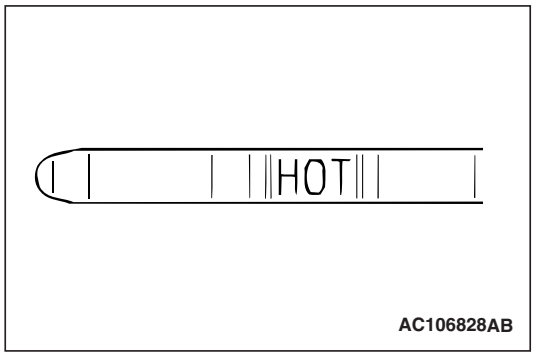

5. Check that the A/T fluid level is between the "HOT" marks on the oil level gauge. If the A/T fluid level is too low, add more A/T fluid until the level reaches between the "HOT" marks.

   Automatic transmission fluid: MITSUBISHI MOTORS GENUINE ATF SP III

   NOTE: If the A/T fluid level is too low, the oil pump draws air into the system along with the A/T fluid, and air bubbles will thus from in the fluid circuit. This will cause a drop in fluid pressure and cause the shift points to change and the clutches and brakes to slip. If the A/T fluid level is too high, the gear will churn the A/T fluid and cause bubbles to develop, which can then cause the same problems as when the A/T fluid is too low. In either case, the air bubbles can cause overheating and oxidation of the A/T fluid, and also prevent the valves, clutches and brakes from operating normally. In addition, if bubbles develop in the A/T fluid, the A/T fluid can overflow from the transmission vent holes and be mistaken for leaks.
6. Securely re-insert the oil level gauge.

E2. CHANGE AUTOMATIC TRANSMISSION FLUID AND CVT FLUID

M6020601500504

Specifications

CVT fluid and A/T fluid	Quantity	Remark
MITSUBISHI MOTORS GENUINE CVTF-J4	7.1 L	F1CJA
MITSUBISHI MOTORS GENUINE ATF SP III	7.7 L	F4A4A

CHANGE PROCEDURE <F1CJA>

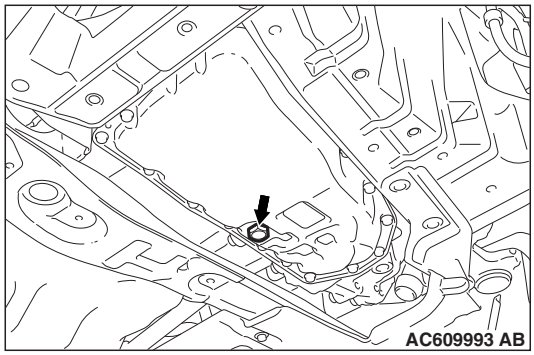

1. Remove the drain plug on the bottom of the transmission case to drain the CVT fluid.

   Discharge amount: Approx. 5.5 L
2. Install the drain plug with a new gasket to the transmission case, and tighten it to the specified torque.

   Tightening torque: 34 ± 2 N·m

⚠ CAUTION

If the transmission case becomes full before filling 5.5 L of CVT fluid, stop filling the CVT fluid.

3. Fill in the new CVT fluid through the oil filler tube.

   Filling amount: Approximately 5.5 L
4. tart up the engine and let it idle for 1 to 2 minutes.
5. Move the selector lever to every position, and then move it to the P range.
6. Stop the engine and perform the above steps 1 to 5 again.
7. Stop the engine, and discharge a small amount of CVT fluid to check for fouling. If fouling is found, repeat steps 1 to 5 until clean CVT fluid comes out.

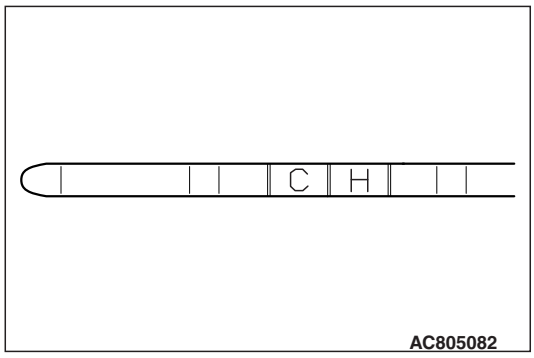

8. Drive the vehicle until the CVT fluid is warmed up to the normal operating temperature (70 to 80°C), and check the CVT fluid level. It must be within the "H" area on the oil level gauge.

   NOTE: The "C" level is for reference only. Use the "H" level as the criteria.

NOTE: Use M.U.T.-III. to measure the CVT fluid temperature.

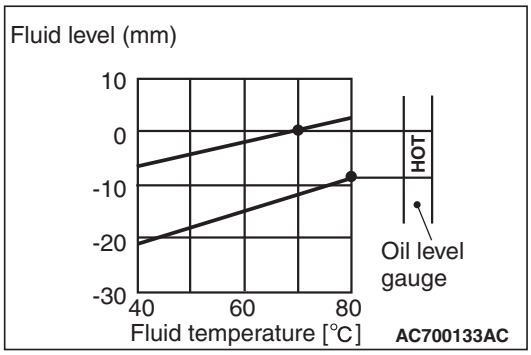

NOTE: When a certain amount of time is required to warm up the CVT fluid to the normal operating temperature (70 to 80°C), check the oil level referring to the characteristics chart.

9. Adjust the CVT fluid level to the specified level. Refill the CVT fluid when the fluid level is low, and drain the CVT fluid through the drain plug when the fluid level is high.
10. Securely insert the oil level gauge into the oil filler tube.
11. CVT-ECU records the deterioration level of the CVT fluid. After replacing the CVT fluid with new one, use M.U.T.-III to reset the deterioration level recorded in CVT-ECU.

<F4A4A>

If you have an A/T fluid changer, use the A/T fluid changer to flush the A/T fluid. If you do not have an A/T fluid changer, follow the procedure given below.

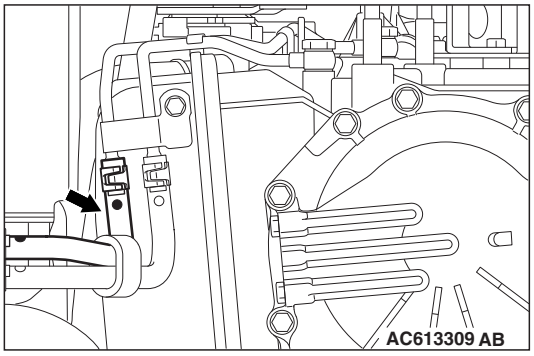

1. Remove the hose shown in the illustration which allows the A/T fluid to flow from the A/T fluid cooler (built into the radiator) to the transmission.

⚠ CAUTION

The engine should be stopped within one minute of it being started. If the A/T fluid has all been discharged before this, stop the engine at that point.

2. Start the engine and discharge the A/T fluid.

   Driving conditions: N range, idling

   Discharge amount: Approx. 3.5 L

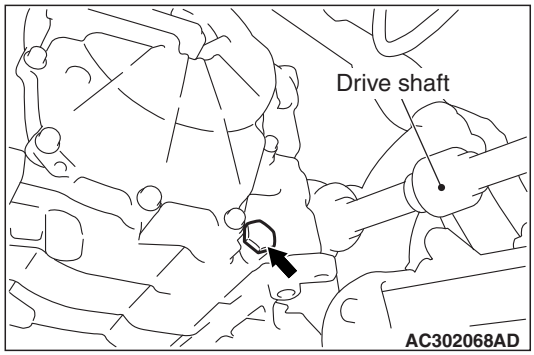

3. Remove the drain plug at the bottom of the transmission case to drain out the remaining A/T fluid.

   Discharge amount: Approx. 2.0 L

4. Install the drain plug with a gasket in between, and tighten it to the specified torque.

   Tightening torque: 32 ± 2 N·m

⚠ CAUTION

Stop pouring in the A/T fluid once 5.5 L has been poured in.

5. Pour in new A/T fluid through the oil filler tube.

   Amount to add: Approx. 5.5 L

6. Repeat the operation in step 2.
7. Pour in new A/T fluid through the oil filler tube.

   Amount to add: Approx. 3.5 L

   NOTE: Carry out steps 2 and 7 so that at least 8.0 L has been discharged from the cooler hose. After this, discharge a small quantity of A/T fluid and check for contamination. If the A/T fluid is contaminated, repeat steps 6 and 7.

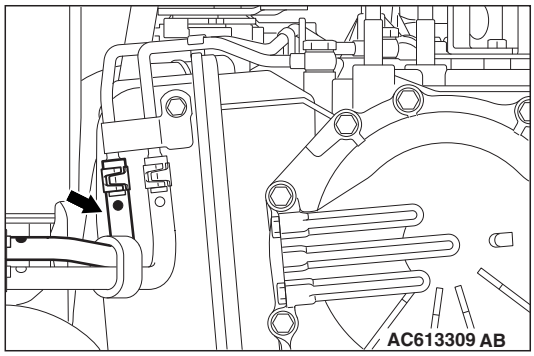

8. Connect the hose which was disconnected in step 1, and then securely re-insert the oil level gauge.
9. Start the engine, and let it run at idle for 1 – 2 minutes.

10.Move the selector lever to all positions once, and then return it to the P position.

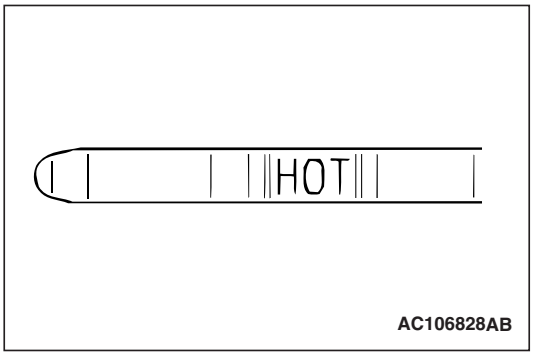

11.Check that the A/T fluid level on the oil level gauge is at the "COLD" mark. If it is not up to this mark, add more A/T fluid.

12.Drive the vehicle until the A/T fluid temperature reaches the normal temperature (70 – 80°C), and then re check the A/T fluid level.

NOTE: The "COLD" mark is for reference only; the "HOT" marks should be used as the standard for judgement.

NOTE: Use M.U.T.-III. to measure the A/T fluid temperature.

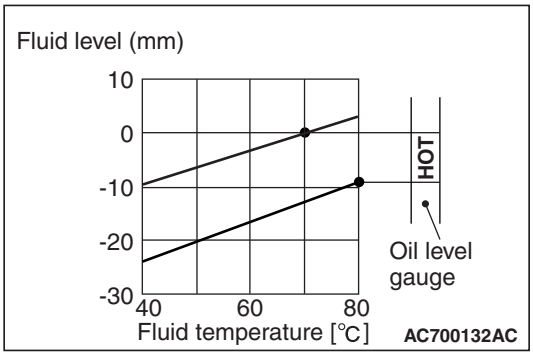

NOTE: Check the oil level referring to the characteristics chart if it takes some time until reaching the normal operation temperature of A/T fluid (70 – 80°C).

13.When A/T fluid is under the specified level, top up A/T fluid. When A/T fluid is over the specified level, drain the excessive A/T fluid from the drain plug to adjust A/T fluid level to the specified level.

14.Securely insert the oil level gauge into the oil filler tube.

E3. CHANGE ENGINE OIL

M6020600301533

<4A9, 4B1, 4J1>

1. Start the engine and allow it to warm up until the temperature of the engine coolant reaches 80°C to 90°C.

⚠ WARNING

Use care as engine oil could be hot.

2. Remove the engine oil filler cap.
3. Remove the engine room under cover extension.
4. Remove the engine oil pan drain plug to drain engine oil.
5. Install a new engine oil pan drain plug gasket and then tighten the engine oil pan drain plug to the specified torque.

   Tightening torque: 39 ± 5 N·m

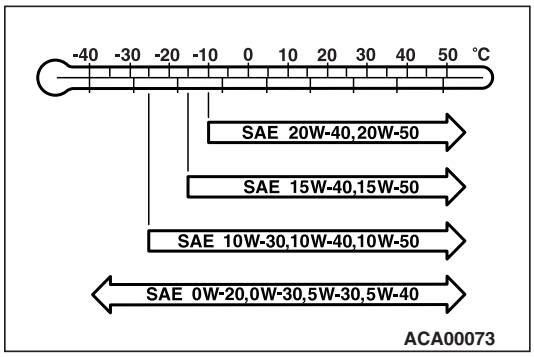

6. Refill with specified quantity of engine oil.

   Specified Engine Oil
   - **ACEA classification: A1/B1, A3/B3, A3/B4 or A5/B5**
   - **ILSAC classification: ILSAC certificated oil**
   - **API classification: SM or higher**

   Total quantity (Includes volume inside engine oil filter):

   4.2 L <4A9>

   4.3 L <4B1, 4J1>

   NOTE: SAE 0W-20, 0W-30, 5W-30, and 5W-40 engine oils can only be used if they meet ACEA A3/B3, A3/B4 or A5/B5 and API SM or higher specifications.
7. Install the engine oil filler cap.
8. Let the engine run for a few minutes.
9. Stop the engine, and then check the engine oil level using the engine oil level gauge after a few minutes.
10. Install the engine room under cover extension.

<4N1>

1. Start the engine and allow it to warm up until the temperature of the engine coolant reaches 80°C to 90°C.

⚠ WARNING

Use care as engine oil could be hot.

2. Remove the engine oil filler cap.
3. Remove the engine room under cover extension.
4. Remove the engine oil pan drain plug to drain engine oil.
5. Install a new engine oil pan drain plug gasket and then tighten the engine oil pan drain plug to the specified torque.

   Tightening torque: 39 ± 5 N·m

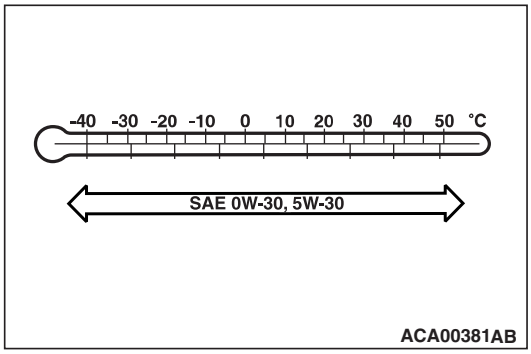

6. Refill with specified quantity of engine oil.

   Specified Engine Oil
   - **ACEA classification: "For service C1, C2, C3 or C4"**
   - **JASO classification: "For service DL-1"**

   Total quantity (Includes volume inside engine oil filter): 5.3 L
7. Install the engine oil filler cap.
8. Let the engine run for a few minutes.
9. Stop the engine, and then check the engine oil level using the engine oil level gauge after a few minutes.
10. Install the engine room under cover extension.

E4. REPLACE ENGINE OIL FILTER

M6020600401303

1. Start the engine and allow it to warm up until the temperature of the engine coolant reaches 80 °C to 90 °C.

⚠ WARNING

Use care as engine oil could be hot.

2. Remove the engine oil filler cap.
3. Remove the engine room under cover extension.
4. Remove the engine oil pan drain plug to drain engine oil.

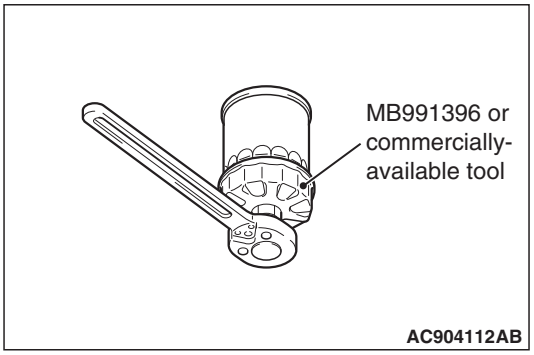

5. Use the respective tool in the following table to remove the engine oil filter.
6. Clean the engine oil filter installing surface on the cylinder block side.

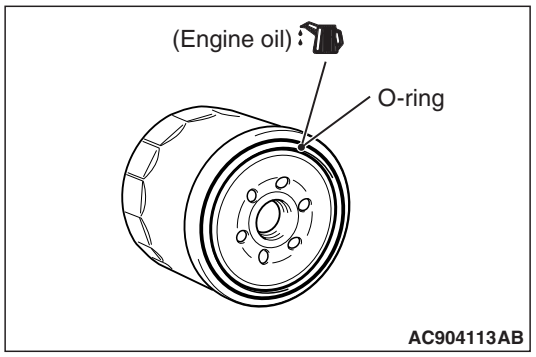

7. Apply a small amount of engine oil to the new engine oil filter O-ring.
8. Tighten the engine oil filter until the O-ring contacts with the installation surface.

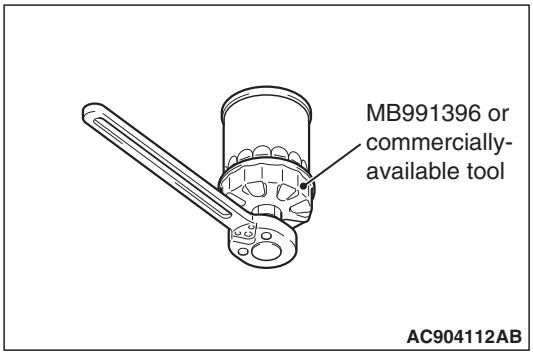

9. In the same manner as removal, use the respective tool in the following table to tighten to the specified torque.

10. Install the engine oil pan drain plug and refill the engine oil.
11. Rev the engine a few times, and check to be sure that no engine oil leaks from the installation section of the engine oil filter.
12. Install the engine room under cover extension.

Oil filter number	Special tool	Tightening torque
MD360935	Oil filter wrench (MB991396) or commercially- available tool	Approx. 1 turn (14 ± 2 N·m)

E6. CHECK EXHAUST GAS RECIRCULATION (EGR) SYSTEM

M6020600801022

CHECKING THE OPERATION SOUND

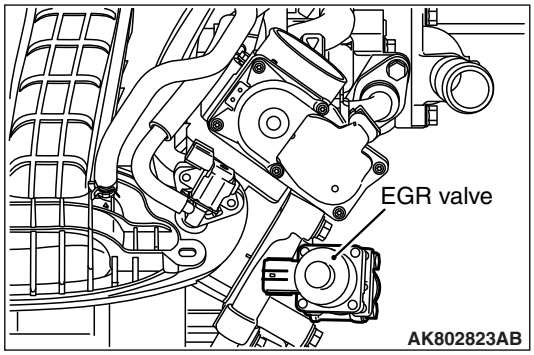

1. Check that the operation sound of the stepper motor can be heard from the EGR valve when the ignition switch is turned ON (without starting the engine).
2. If the operation sound cannot be heard, inspect the drive circuit of the stepper motor.

NOTE: If the circuit is normal, either the stepper motor or the engine-ECU may have failed.

CHECKING THE COIL RESISTANCE

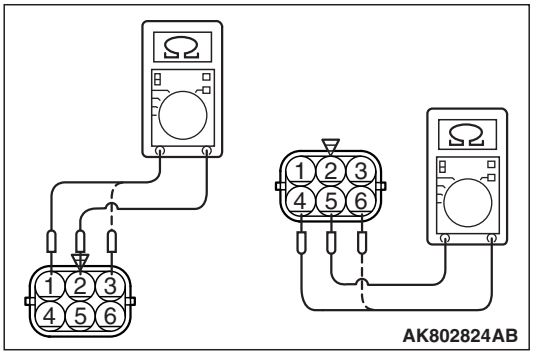

1. Remove the EGR valve.
2. Measure the resistance between terminal No. 2 and either terminal No. 1 or terminal No. 3 of the connector at the EGR valve.

   Standard value: 20 – 24 Ω (at 20°C)
3. If the resistance is not within the standard, replace the EGR valve.
4. Measure the resistance between terminal No. 5 and either terminal No. 6 or terminal No. 4 of the connector at the EGR valve.

   Standard value: 20 – 24 Ω (at 20°C)
5. If the resistance is not within the standard, replace the EGR valve.
6. Using a new gasket, install the EGR valve by tightening its mounting bolts to the specified torque.

   Tightening Torque:
   23.5 ± 3.5 N·m

OPERATION CHECK

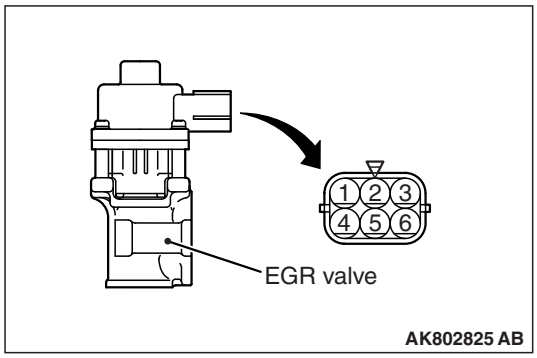

1. Remove the EGR valve.
2. Attach a test wiring harness (special tool MB991658) to the connector at the EGR valve.

⚠ CAUTION

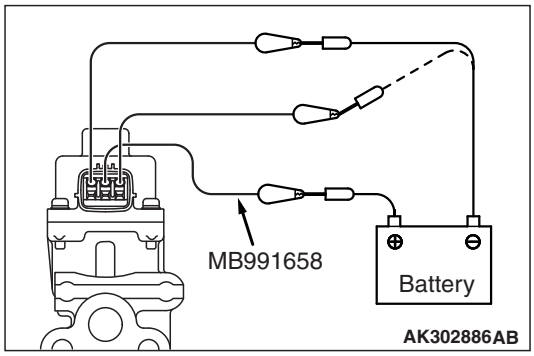

Connecting battery voltage to the EGR valve for a long term could damage the coil.

3. Connect the positive (+) terminal of the battery to terminal No. 2.
4. Connect terminals No. 1 and No. 3 to the negative (-) terminal of the battery, in order to test whether the stepper motor vibrates (with a slight shudder), indicating that the stepper motor is operating.

⚠ CAUTION

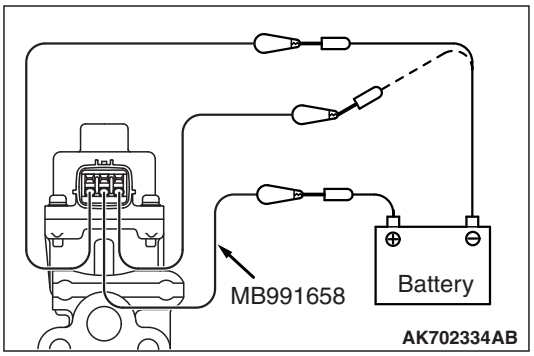

Connecting battery voltage to the EGR valve for a long term could damage the coil.

5. Connect the positive (+) terminal of the battery to terminal No. 5.
6. Connect terminals No. 4 and No. 6 to the negative (-) terminal of the battery, in order to test whether the stepper motor vibrates (with a slight shudder), indicating that the stepper motor is operating.
7. If a vibration can be felt during the test, the stepper motor is normal.
8. Using a new gasket, install the EGR valve by tightening its mounting bolts to the specified torque.

Tightening Torque:
23.5 ± 3.5 N·m

OTHERS

F1. CHECK BODY CONDITION FOR DAMAGE

M6020700100306

1. Check underbody coating for damage.
2. Check body painting for damage.

F2. CHECK THE COMMON RAIL ENGINE (SMALL INJECTION QUANTITY LEARNING)

M6020700400147

LEARNING PROCEDURE

⚠ CAUTION

To prevent damage to M.U.T.-III, always turn the ignition switch to the "LOCK" (OFF) position before connecting or disconnecting M.U.T.-III.

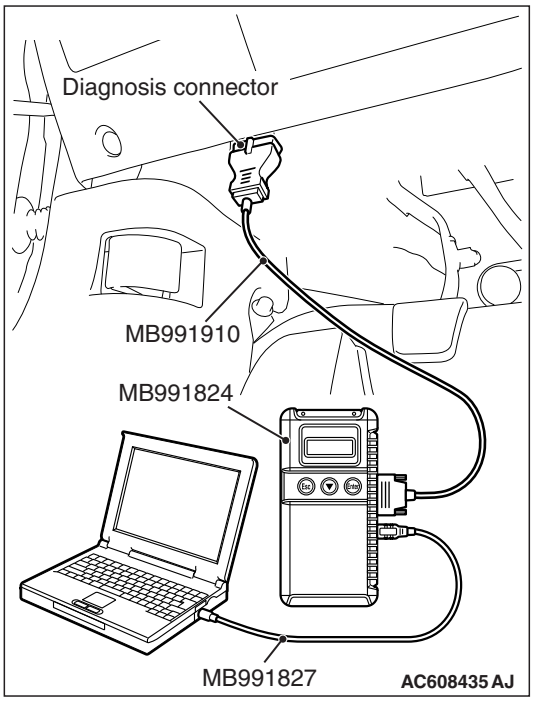

1. After the ignition switch is in "LOCK" (OFF) position, connect the M.U.T.-III to the diagnosis connector.
2. Put the vehicle in the following idling stable conditions:
   - Engine coolant temperature: 76 – 100°C
   - Fuel temperature: 30 – 100°C
   - Intake air temperature: –30 to 100°C
   - Barometric pressure: 70 kPa or more
   - Lamps, radiator fan and all accessories: OFF
   - Transmission: Neutral
   - Power steering: Static state
3. Select "MPI/GDI/DIESEL" from System select Screen of the M.U.T.-III.
4. Select "Special Function" from MPI/GDI/DIESEL Screen.
5. Select "Learning" from Special Function Screen.
6. Select Item No. 1 "Small Injection qt. Learning" from the Learning Screen to execute learning.

⚠ CAUTION

If the vehicle conditions go out of the learning conditions during idling, learning is interrupted.

To reexecute learning, the ignition switch must once be turned off.

7. Continue idling for about 3 minutes before learning is completed.
8. Confirm that the engine warning lamp is off. If it still blinks, reexecute learning.

F3. ROAD TEST

M6020700200671

Drive the vehicle and check for conditions.

1. Check free play of steering wheel.
2. Check efficiency of service brakes and parking brakes system.
3. Check driveability of engine.
4. Check condition of instruments, gauges indicators, exterior lamps, heater and ventilators.
5. Check abnormal noise of each part.
6. Check the tyres for wear and for the correct air pressure.