MITSUBISHI MOTORS

SERVICE BULLETIN

GLOBAL AFTER SALES OFFICE, MITSUBISHI MOTORS CORPORATION

PURPOSE : INFORMATION	ISSUE NO. : MSB-12E15-001A	DATE : 2012-03-28
SUBJECT : CAUTION FOR INSTALLING AIR INTAKE PIPE TO 4N1 ENGINES		<MODEL> <M/Y>
GROUP : INTAKE AND EXHAUST		(EUR) See following 2. Applicable Manuals table.

1. Description:

A caution has been added to the installation procedure of the air intake pipe (air intake pipe and turbocharger) for 4N1 engines in the applicable Workshop Manuals. This Service Bulletin contains the added caution.

2. Applicable Manuals:

Manual/Model	<M/Y>	Pub. No.	Title (Info-ID)	Attached Sheet
2011 LANCER/LANCER SPORTBACK Workshop Manual CD-ROM (CY0A/CX0A)	11	CGSE11E1-CD (English) CGSF11E1-CD (French) CGSG11E1-CD (German) CGSI11E1-CD (Italian) CGSS11E1-CD (Spanish)	Air Cleaner Removal and Installation <4N1> (M151-00-212-89100-01) *Info-ID is changed	Attached sheet 2
2012 LANCER/LANCER SPORTBACK Workshop Manual CD-ROM (CY0A/CX0A)	12	CGSE12E1-CD (English) CGSF12E1-CD (French) CGSG12E1-CD (German) CGSI12E1-CD (Italian) CGSS12E1-CD (Spanish)	Air Cleaner Removal and Installation <4N1> (M151-00-213-52600-01) *Info-ID is changed	
2011 OUTLANDER Workshop Manual CD-ROM (CW0W)	11	CGXE11E1-CD (English) CGXF11E1-CD (French) CGXG11E1-CD (German) CGXI11E1-CD (Italian) CGXS11E1-CD (Spanish)	Air Cleaner Removal and Installation <4N1> (M151-00-213-37700-01) *Info-ID is changed	
2012 OUTLANDER Workshop Manual CD-ROM (CW0W)	12	CGXE12E1-CD (English) CGXF12E1-CD (French) CGXG12E1-CD (German) CGXI12E1-CD (Italian) CGXS12E1-CD (Spanish)		
2011 ASX Workshop Manual CD-ROM (GA0W)	11	CGWE11E2-CD (English) CGWF11E2-CD (French) CGWG11E2-CD (German) CGWI11E2-CD (Italian) CGWS11E2-CD (Spanish)	Air Cleaner Removal and Installation <4N1> (M151-00-213-26900-01) *Info-ID is changed	
2012 ASX Workshop Manual CD-ROM (GA0W)	12	CGWE12E2-CD (English) CGWF12E2-CD (French) CGWG12E2-CD (German) CGWI12E2-CD (Italian) CGWS12E2-CD (Spanish)		

There may be some attached sheets not included in this Service Bulletin because they are not applicable to your market. Their sheet numbers are not listed in the above table.

3. Details:

See Attached sheet 2.

※This service bulletin has been issued as the revised edition "A" for the change of Info-ID

REMOVAL AND INSTALLATION <4N1>

⚠ CAUTION

- **When removing or installing the air flow sensor, be careful not to apply impact to the sensor.**
- **Do not reuse the air flow sensor that has been dropped.**

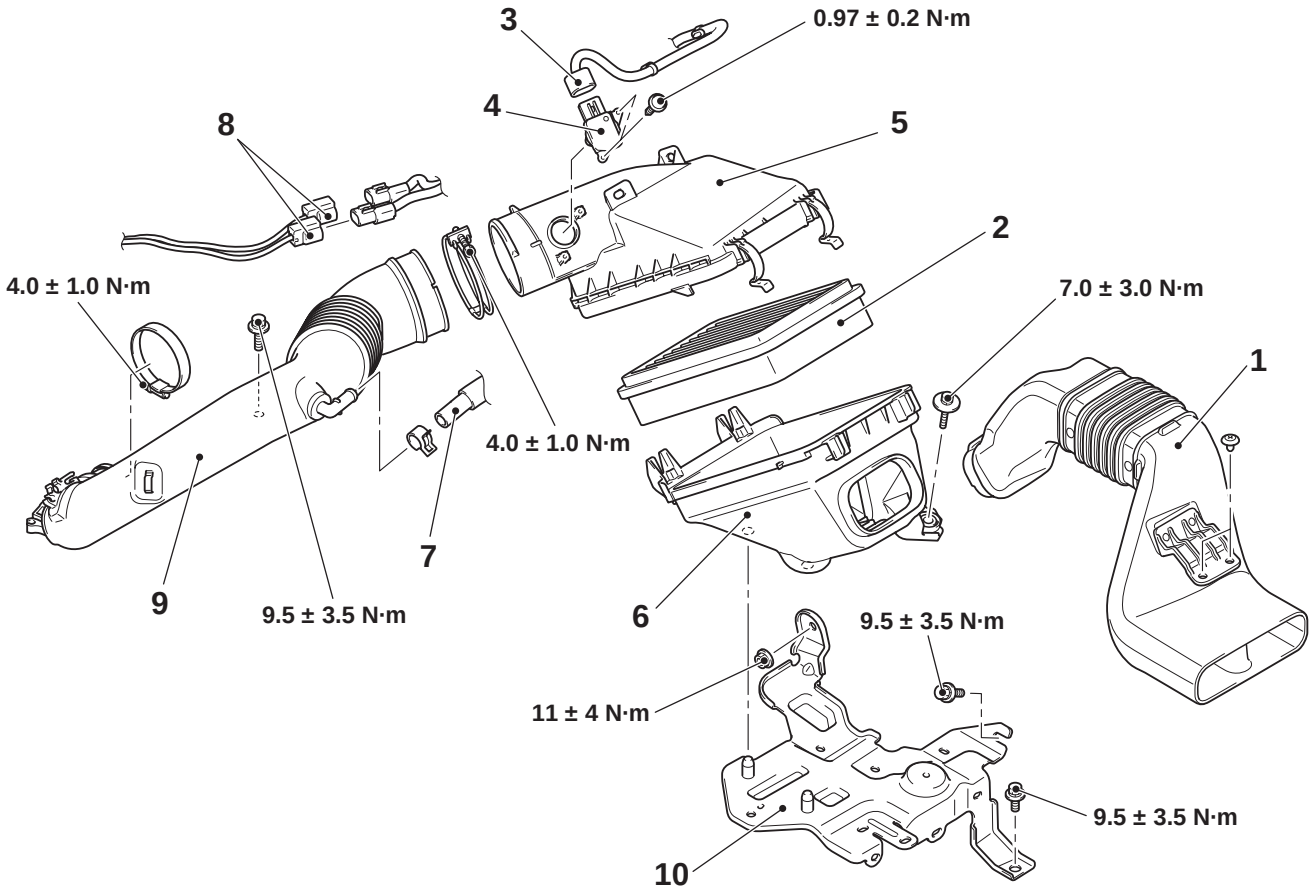

ACA00128 AB

Removal steps

- Headlamp support upper panel cover (Refer to GROUP 51 – Front Bumper Assembly)

1. Air cleaner intake duct
2. Air cleaner element
3. Air flow sensor connector and harness clamp

>>A<< 4. Air flow sensor

5. Air cleaner cover
6. Air cleaner body

Removal steps

- Engine cover (Refer to GROUP 13B – Fuel Injector)

7. Breather hose connection
8. No.1 and No.2 exhaust gas temperature sensor connector and harness clamp

>>B<< 9. Air intake pipe

<Added>

- Engine-ECU (Refer to GROUP 13B – Engine-ECU)

10. Air cleaner bracket

INSTALLATION SERVICE POINT

>>A<< AIR FLOW SENSOR INSTALLATION

1. Install the air flow sensor to the air cleaner cover with care not to damage the O-ring.

CAUTION

Do not over-tighten. If the air flow sensor mounting screw is over-tightened, the air cleaner cover thread can be damaged.

2. Tighten the air flow sensor mounting screws to the specified torque.

   Tightening torque: 1.5 ± 0.3 N·m

>>B<< AIR INTAKE PIPE INSTALLATION

CAUTION

Insert the air intake pipe to the stop position in the turbocharger.

Place the hose clamp as shown in the figure so that it does not overlap with the bulge. Then position the hose clamp 5.5 ± 1mm away from the stopper.

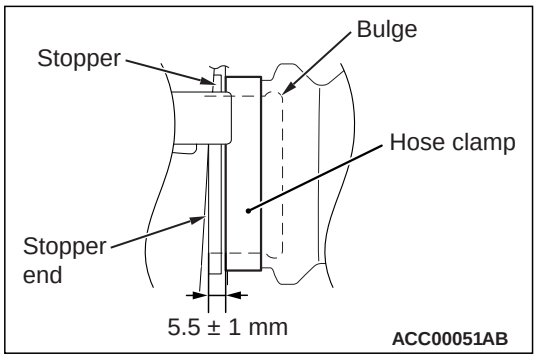

<Added>