MITSUBISHI MOTORS

# SERVICE BULLETIN

GLOBAL AFTER SALES OFFICE. MITSUBISHI MOTORS CORPORATION

| PURPOSE : INFORMATION | ISSUE NO. : MSB-12E54-001 | DATE : 2012-02-10 |
|---|---|---|
| SUBJECT : INFORMATION ON 2011/12 i-MiEV | | <MODEL> (EUR) i-MiEV(HA3W) <M/Y> 11/12 |
| GROUP : CHASSIS ELECTRICAL | | |

## 1. Description:

This Service Bulletin contains the information about change of the maintenance points of the trouble shooting and the charging cable check.

## 2. Applicable manual

| Applicable manual | Pub. No. | Applicable title (INFO ID) | Content |
|---|---|---|---|
| 2011<br>i-MiEV Workshop Manual CD-ROM EUR | EUR:<br>CHAE11E1-CD(Eng)<br>CHAF11E1-CD(Fre)<br>CHAG11E1-CD(Ger)<br>CHAS11E1-CD(Spa)<br>CHAI11E1-CD(Ita) | ・CODE NO.29:PILOT SIGNAL ABNORMAL (M549-55-220-01900-01)<br>・CARGING CABLE CHECK (M549-55-300-01800-01) | Attached sheet 5,7 |
| 2012<br>i-MiEV Workshop Manual CD-ROM EUR | EUR:<br>CHAE12E1-CD(Eng)<br>CHAF12E1-CD(Fre)<br>CHAG12E1-CD(Ger)<br>CHAS12E1-CD(Spa)<br>CHAI12E1-CD(Ita) | ・CODE NO.29:PILOT SIGNAL ABNORMAL (M549-55-220-02000-01)<br>・CARGING CABLE CHECK (M549-55-300-02900-01) | |

## 3. Details:

See Attached sheet 5.7

or

- The pilot signal duty ratio is more than 97 % for more than 2 seconds.

**FAIL-SAFE AND BACKUP FUNCTION**

- The charge is stopped.

**PROBABLE CAUSES**

- The charging cable is failed.
- Open circuits of pilot signal circuit, short circuits to earth, short circuits to power supply system and damage; poor contacts of connector
- The on board charger is failed.

<ADD>

- The earth of power supply facility is failed.

## DIAGNOSIS PROCEDURE

**STEP 1. Check the charging circuit interrupting device status of the charging cable.**

- During the regular charging.

**Q: Is the FAULT indicator (red lamp) lit or blinked?**

**YES :** Refer to Inspection Procedure: FAULT indicator (red lamp) is lit , FAULT indicator (red lamp) blinks .

**NO :** Go to Step 2 .

**STEP 2. Check pilot signal terminal itself.**

- Check charging cable (Refer to ).

**Q: Is the check result normal?**

**YES :** Go to Step 3 .

**NO :** Replace the charging cable.

**STEP 3. Connector check: G-03 regular charging connector and E-03 on board charger/DC-DC converter connector.**

**Q: Are the check results normal?**

**YES :** Go to Step 4 .

**NO :** Repair or replace the connector.

**STEP 4. Check harness between G-03 (terminal No. 3) regular charging connector and E-03 (terminal No. 9) on board charger/DC-DC converter.**

*NOTE: Before checking harness, check intermediate connector G-12, and repair if necessary.*

- Check the signal line for open circuits, short circuits to earth and damage.

**Q: Is the check result normal?**

**YES :** Go to Step 5 .

**NO :** Repair the damaged harness wire.

**TSB Revision**

**STEP 5. M.U.T.-III diagnosis code**

- Reconfirmation of diagnosis code.

**Q: Is diagnosis code set?**

＜NEW＞

YES : Go to Step 6 .

＜OLD＞

**YES :** ~~Replace the on board charger/DC-DC converter.~~

**NO :** Intermittent malfunction (Refer to GROUP 00 – How to Use Troubleshooting/Inspection Service Points – How to Cope with Intermittent Malfunctions ).

＜ADD＞

STEP 6. Check earth of power supply facility.

**Q:Is the check result normal?**

**YES :** Go to Step 7 .

**NO :** Repair the power supply facility.

STEP 7. M.U.T.-III diagnosis code

• Reconfirmation of diagnosis code.

**Q:Is diagnosis code set?**

YES : Replace the on board charger/DC-DC converter.

NO : Intermittent malfunction (Refer to GROUP 00 - How to Use Troubleshooting/Inspection Service Points - How to Cope with Intermittent Malfunctions ).

**TSB Revision**

## CHARGING CABLE CHECK

**Visual check**

1. Check that the cable, the regular charging plug and the plug do not have damage, corrosion or rust. If they have damage, corrosion or rust, replace the charging cable.

<ADD>

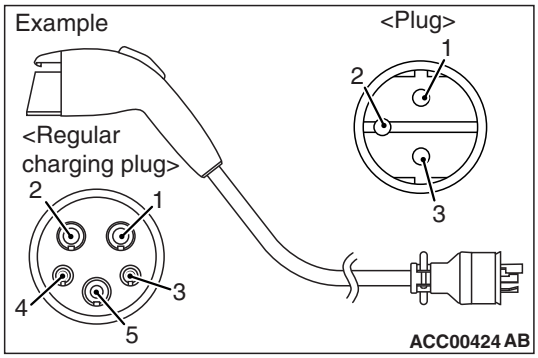


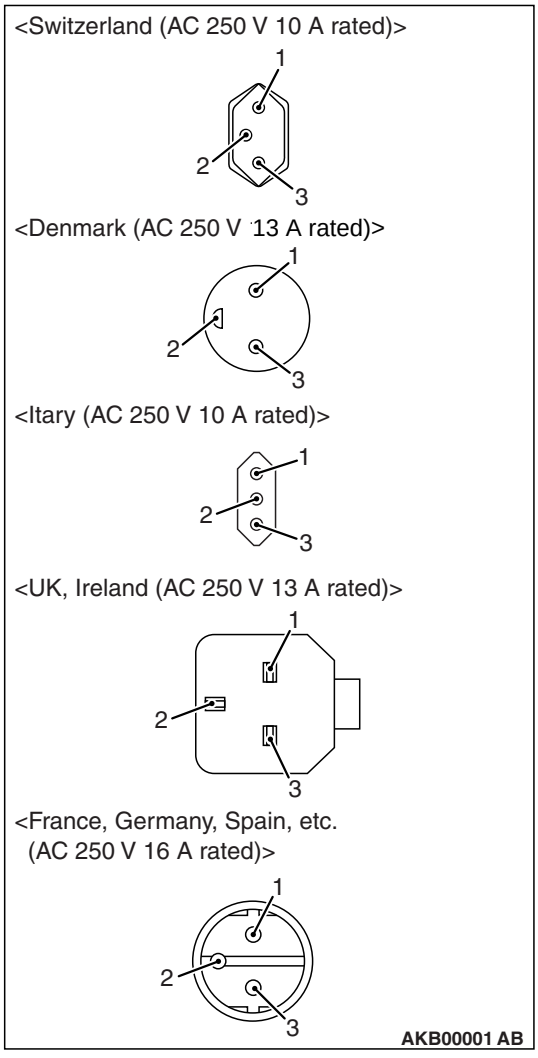


Continuity check

1. Check continuity between the plug earth terminal and the regular charging plug earth terminal.

| Plug terminal | Regular charging plug terminal | Normal condition |
|---|---|---|
| No.2 | No.5 | Continuity |

2. If no continuity, replace the regular charging cable.

Example

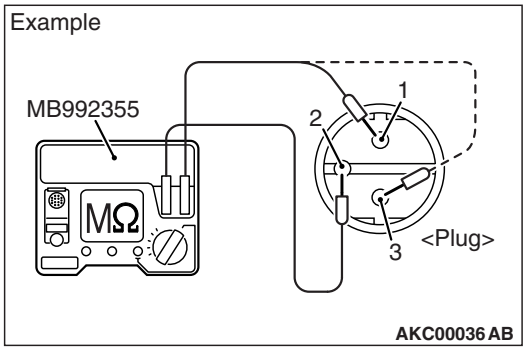


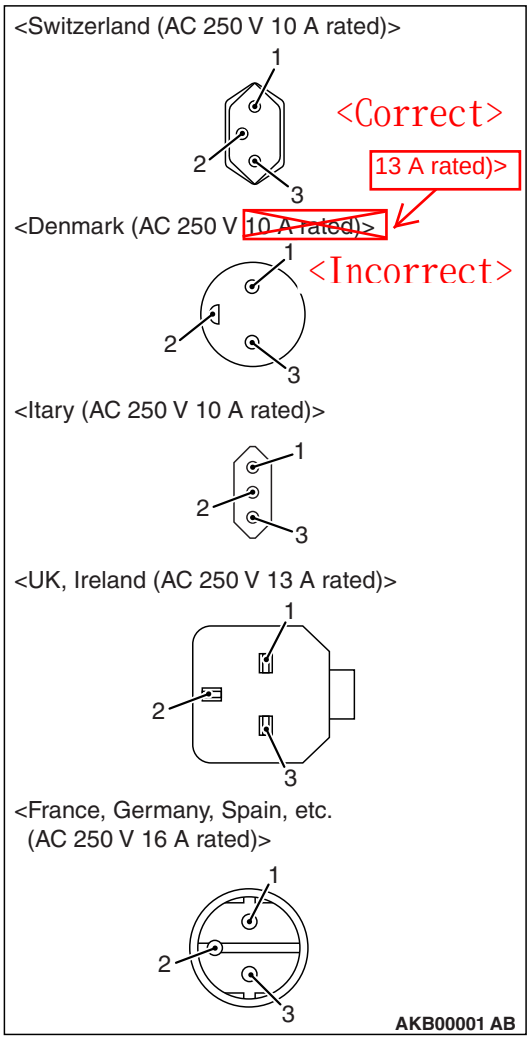


**Check on insulation resistance**

**CAUTION**

**When the insulation resistance is measured, set the range of the special tool electric insulation tester (MB992355) to 500 V. When the insulation resistance is measured at the range more than 500 V, the component may be damaged.**

1. Use the special tool electric insulation tester (MB992355) to measure the insulation resistance at the plug side with the range of 500 V.

   *NOTE: The plug shape is different depending on the country. Perform the check according to the specification of each country, referring to the illustration.*

**Standard value:**

| Tester connection terminal | Standard value |
|---|---|
| 1 – 2 | 1 MΩ or more |
| 2 – 3 | 1 MΩ or more |

**TSB Revision**