SERVICE BULLETIN

MITSUBISHI MOTORS

GLOBAL AFTER SALES OFFICE, MITSUBISHI MOTORS CORPORATION

PURPOSE : CORRECTION	ISSUE NO. : MSB-12E55-501A	DATE : 2012-05-30
SUBJECT : A/C DIAGNOSIS CODE		<MODEL> (EUR) i-MiEV(HA3W) <M/Y> 11/12
GROUP : HEATER AIR CONDITIONER		

1. Description:

An incorrect description about the A/C diagnosis codes B1105,B1108,B1109 and B1110 have been found in the applicable Service Manual. This contains the corrected information.

2. Applicable Manual :

Destination	Applicable manual	Pub.No.	Applicable title(INFO ID)	Content
EU	2011 i-MiEV WORKSHOP MANUAL	EUR: CHAE11E1-CD(Eng) CHAF11E1-CD(Fre) CHAG11E1-CD(Ger) CHAS11E1-CD(Spa) CHAI11E1-CD(Ita)	Code No. B1105 Electric compressor (communication) (M550-10-070-01900-01) Code No. B1108 Electric water heater fail 1 (M550-10-100-01300-01) <11MY (EU)> A (M550-10-100-02400-01) <12MY (EU> A Code No. B1109 Electric water heater fail 2 (M550-10-110-01000-01) <11MY (EU)> A (M550-10-110-02100-01) <12MY (EU)> A Code No. B1110 Electric water heater fail 3 (M550-10-120-01700-01) <11MY (EU)> A (M550-10-120-02800-01) <12MY (EU)> A	Attached sheet 9～16
	2012 i-MiEV WORKSHOP MANUAL	EUR: CHAE12E1-CD(Eng) CHAF12E1-CD(Fre) CHAG12E1-CD(Ger) CHAS12E1-CD(Spa) CHAI12E1-CD(Ita)		

3. Details:

See Attached sheet 9-16

Attached sheet 9 (1/2)

Code No. B1105 Electric compressor (communication error)

A/C compressor circuit

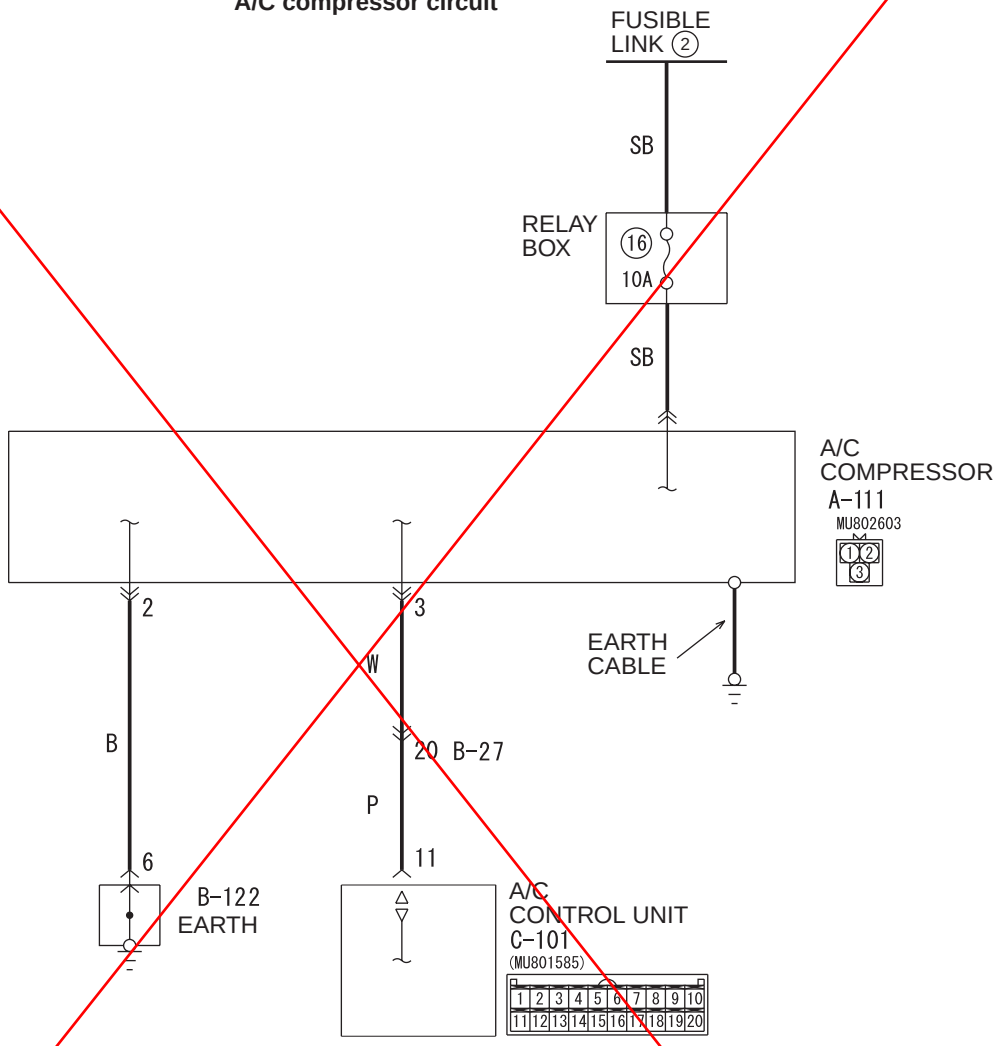

Wire colour code
B : Black LG : Light green G : Green L : Blue W : White Y : Yellow SB : Sky blue
BR : Brown O : Orange GR : Grey R : Red P : Pink V : Violet PU : Purple SI : Silver

ACA03263

Connector: A-111 <LHD>

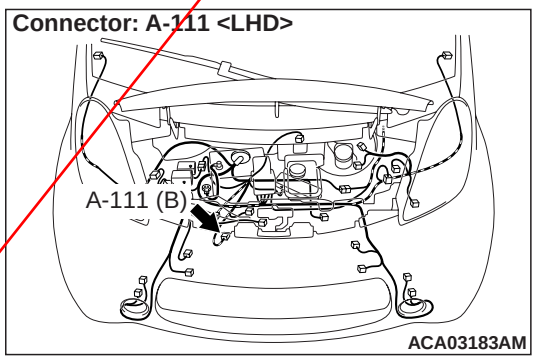

ACA03183AM

Connector: A-111 <RHD>

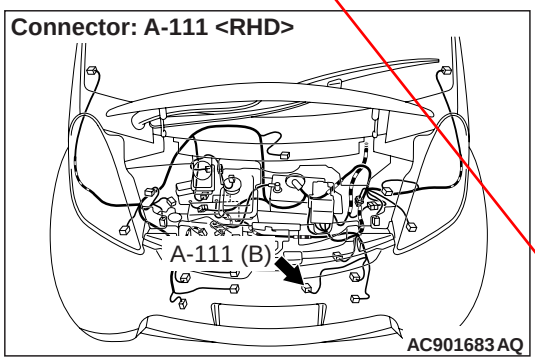

AC901683AQ

<Incorrect>

MSB-12E55-501A(12AB003A)

Inset the attached sheet 10

Attached sheet 9 (2/2)

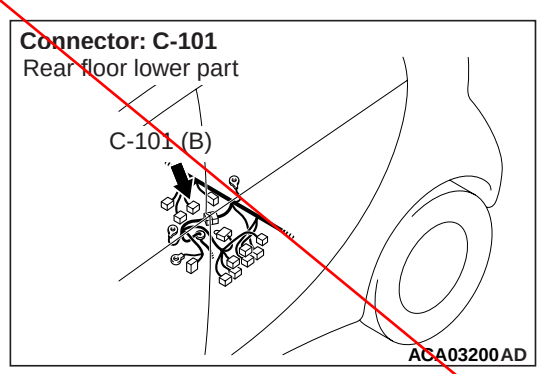

DIAGNOSIS CODE SET CONDITIONS

This code is set when the A/C compressor inverter cannot communicate with the compressor & heater controller for 5 seconds or more.

PROBABLE CAUSES

- Compressor & heater controller
- A/C compressor power supply
- Malfunction of A/C compressor
- Damaged harness wires and connectors

DIAGNOSIS PROCEDURE

STEP 1. Connector check: C-101 A/C control unit connector and A-111 A/C compressor connector

Q: Is the check result normal?
YES : Go to Step 2.
NO : Repair the damaged connector.

STEP 2. Check the wiring harness between C-111 A/C compressor connector terminal No. 3 and A-101 A/C control unit connector terminal No. 11.

- Check the input and output lines for open or short circuit.

NOTE: Before checking the wiring harness, check the intermediate connector B-27 and repair it if necessary.

Q: Is the check result normal?
YES : Go to Step 3.
NO : Repair the wiring harness.

STEP 3. Check the wiring harness between C-101 A/C compressor terminal No. 1 and the fusible link (2).

- Check the power supply line for open circuit.

Q: Is the check result normal?
YES : Go to Step 4.
NO : Repair the wiring harness.

STEP 4. After replacing the compressor & heater controller, check again if the diagnosis code is set.

Q: Is the diagnosis code set?
YES : Replace the A/C compressor.
NO : Intermittent malfunction. Refer to GROUP 00 – How to Use Troubleshooting/ Inspection Service Points, – How to Cope with Intermittent Malfunctions .)

<Incorrect>

Inset the attached sheet 10

Attached sheet 10 (1/3)

Code No. B1105 ELC. compressor (communication)

A/C Compressor Circuit

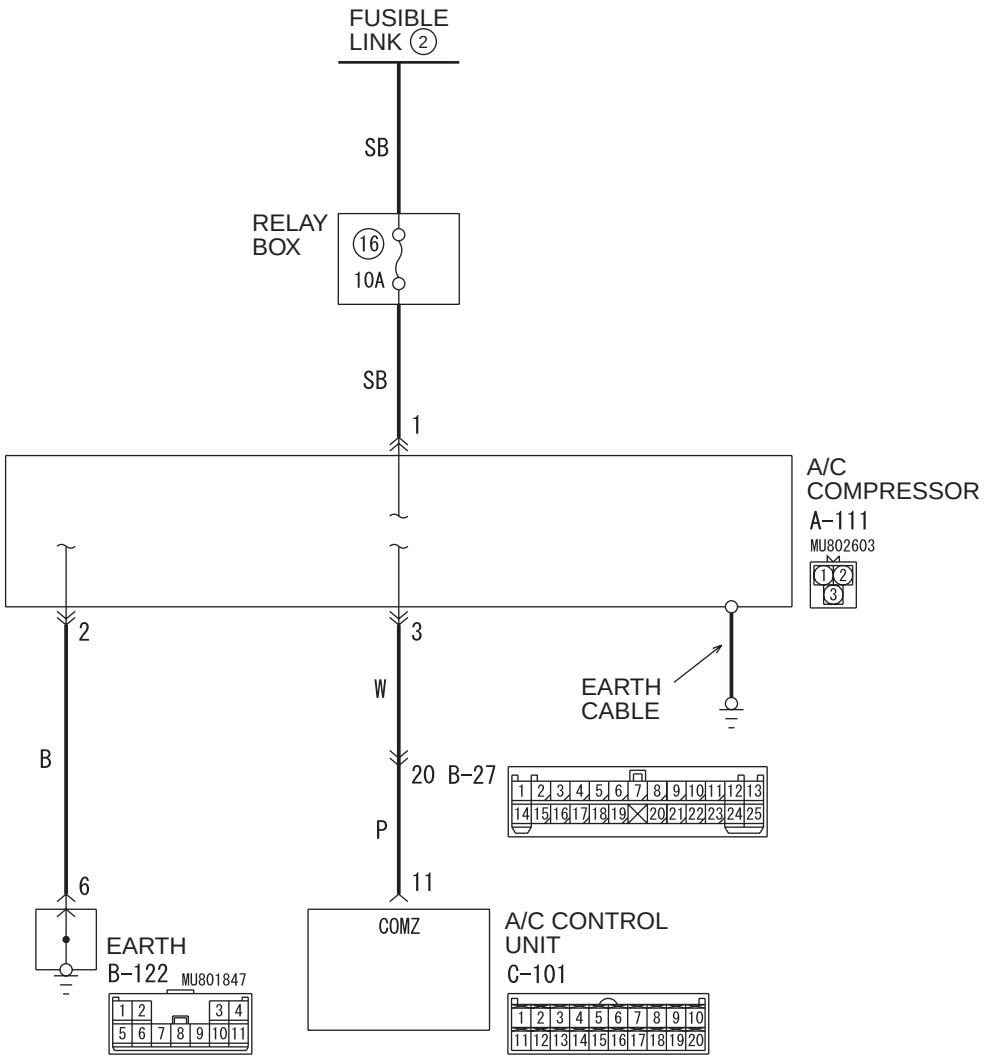

ACC00320
WDT55M006A

Connector: A-111 <LHD>

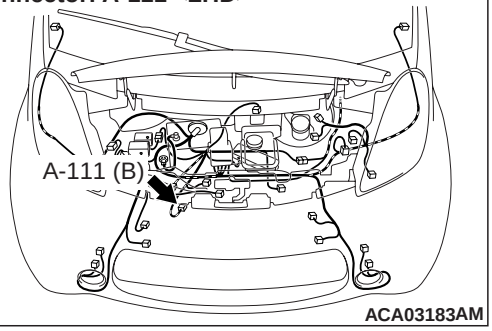

ACA03183AM

Connector: A-111 <RHD>

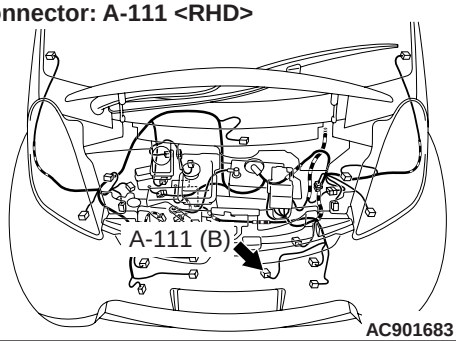

AC901683AQ

<Correct>

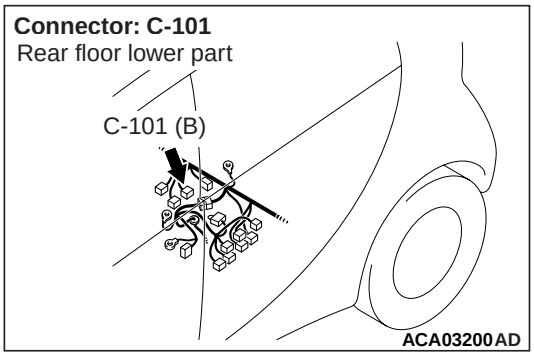

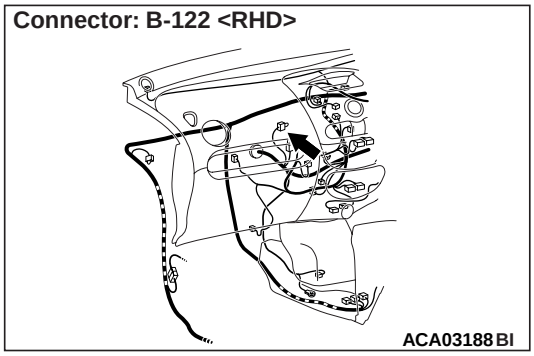

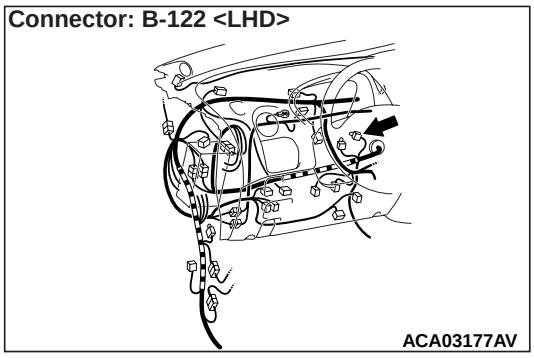

Diagnosis code set conditions
This code is set when the A/C control unit cannot communicate with the compressor & heater controller for 5 seconds or more.

PROBABLE CAUSES
- Malfunction of A/C control unit
- Malfunction of A/C compressor
- Damaged harness wires and connectors
- Power supply and earth to the A/C compressor defective

DIAGNOSIS PROCEDURE

STEP 1. Connector check: C-101 A/C control unit and A-111 A/C compressor connector

Q: Is the check result normal?
YES : Go to Step 2.
NO : Repair the damaged connector.

STEP 2. Meausre voltage at the A/C compressor connector A-111.
(1) Disconnect the connector, and measure at the wiring harness side.
(2) Voltage between terminal 1 and body earth

OK: Battery voltage

Q: Is the check result normal?
YES : Go to Step 4.
NO : Go to Step 3.

STEP 3. Check the wiring harness between the fusible link (2) and A-111 A/C compressor connector terminal No. 1.
- Check the power supply line for open circuit.

Q: Is the check result normal?
YES : Intermittent malfunction. (Refer to GROUP 00 – How to Use Troubleshooting/ Inspection Service Points, How to Cope with Intermittent Malfunctions .)
NO : Repair the wiring harness.

STEP 4. Meausre resistance value at the A/C compressor connector A-111.
(1) Disconnect the connector, and measure at the wiring harness side.
(2) Resistance between terminal No. 2 and body earth

OK: Continuity exists (2 Ω or less).

Q: Is the check result normal?
YES : Go to Step 5.
NO : Go to Step 7.

STEP 5. Check the wiring harness between C-101 A/C control unit connector terminal No. 11 and A-111 A/C compressor connector terminal No. 3.
- Check the input and output lines for open or short circuit.

NOTE: Before checking the wiring harness, check the intermediate connector B-27 and repair it if necessary.

Q: Is the check result normal?
YES : Go to Step 6.
NO : Repair the wiring harness.

STEP 6. After replacing the A/C control unit , check again if the diagnosis code is set.

Q: Is the diagnosis code set?

<Correct>

YES : Replace the A/C compressor.
NO : Intermittent malfunction. (Refer to GROUP 00 – How to Use Troubleshooting/ Inspection Service Points, How to Cope with Intermittent Malfunctions .)

STEP 7. Connector check: B-122 grounding connector

Q: Is the check result normal?
YES : Go to Step 8.
NO : Repair the damaged connector.

STEP 8. Check the wiring harness between A-111 A/C compressor connector terminal No.2 and B-122 grounding connector terminal No. 6.

- Check the earth wires for open circuit.

Q: Is the check result normal?
YES : Intermittent malfunction. (Refer to GROUP 00 – How to Use Troubleshooting/ Inspection Service Points, How to Cope with Intermittent Malfunctions .)
NO : Repair the wiring harness.

<Correct>

Attached sheet 11 (1/5)

Code No. B1108 Electric water heater system abnormal stop 1

Weater heater system circuit

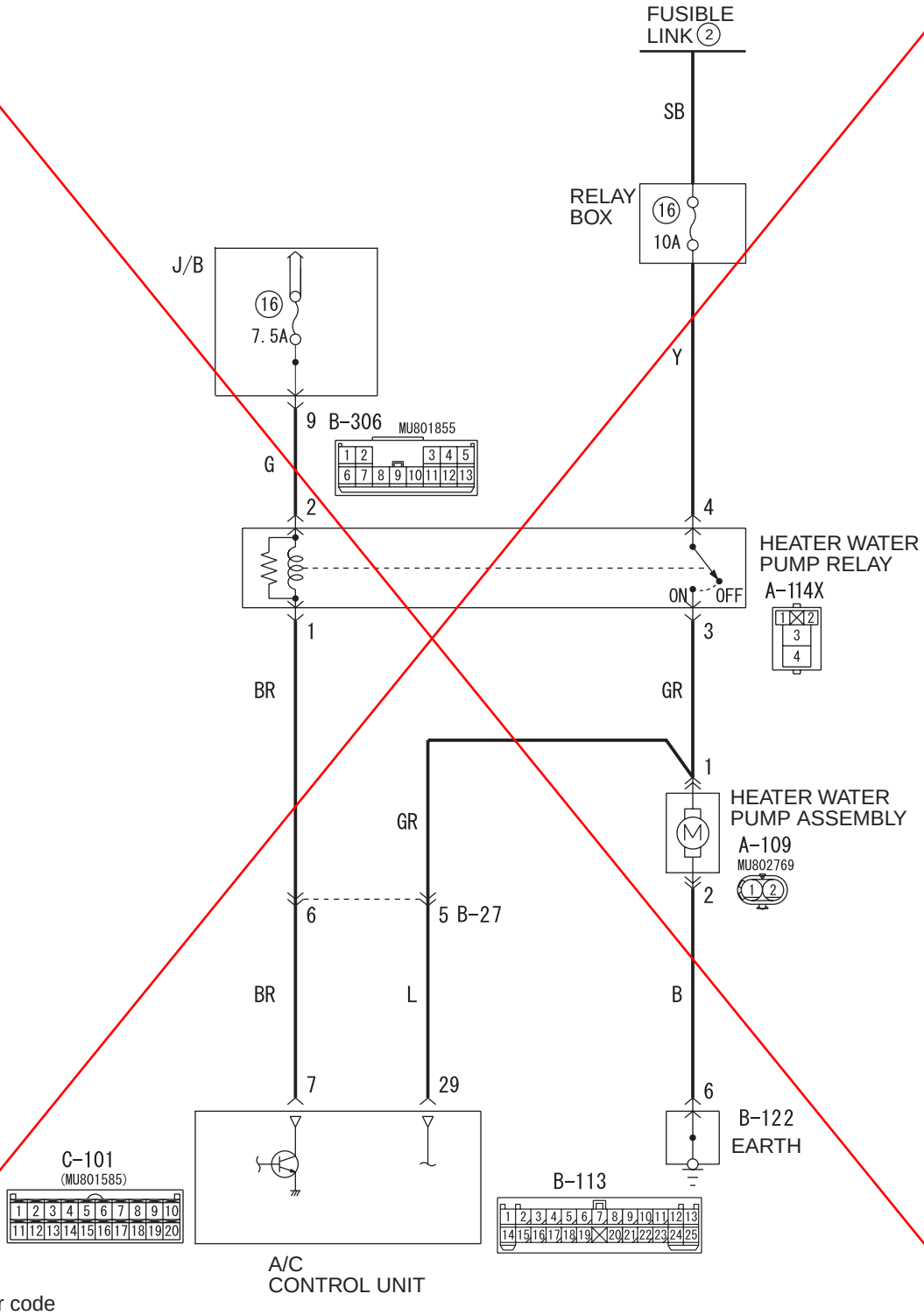

Wire colour code
B : Black LG : Light green G : Green L : Blue W : White Y : Yellow SB : Sky blue
BR : Brown O : Orange GR : Grey R : Red P : Pink V : Violet PU : Purple SI : Silver

ACA03321

<Incorrect>

Inset the attached sheet 12

Attached sheet 11 (2/5)

A/C control circuit

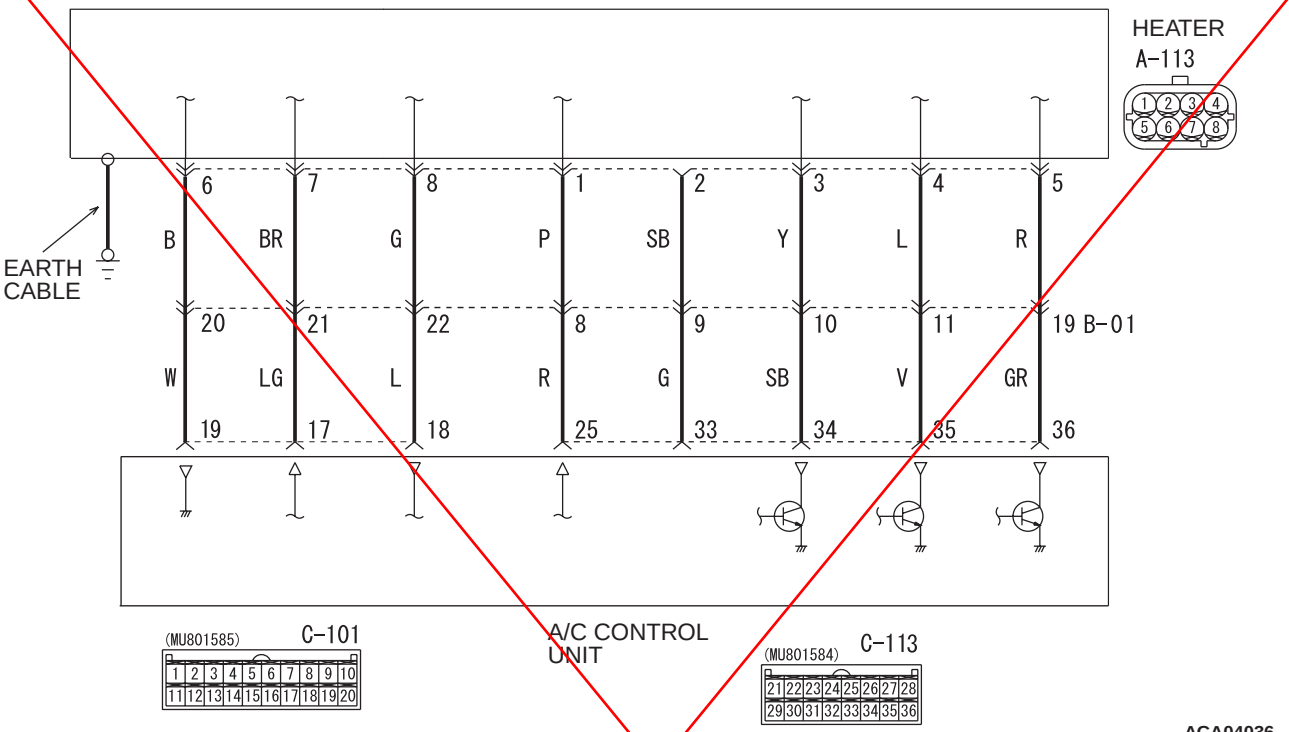

Wire colour code
B : Black LG : Light green G : Green L : Blue W : White Y : Yellow SB : Sky blue
BR : Brown O : Orange GR : Grey R : Red P : Pink V : Violet PU : Purple SI : Silver

Connector: A-114X <LHD>

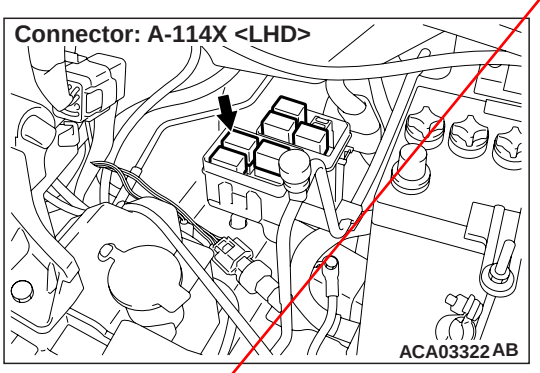

Connectors: A-109, 113 <LHD>

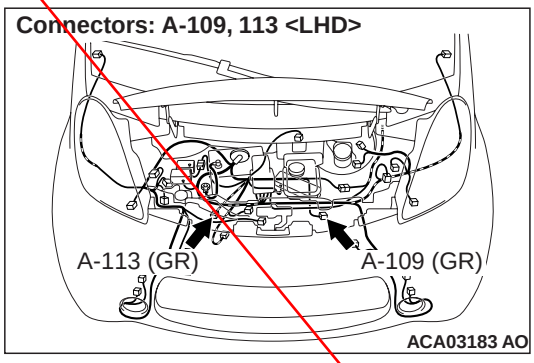

Connector: A-114X <RHD>

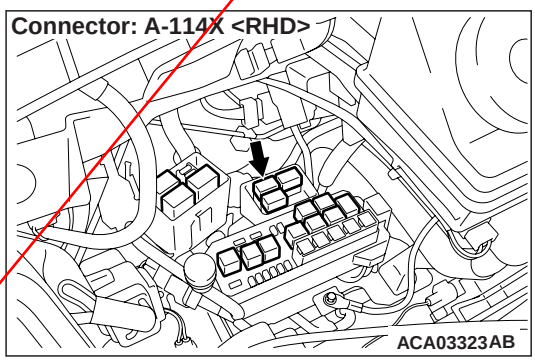

Connectors: A-109, A-113 <RHD>

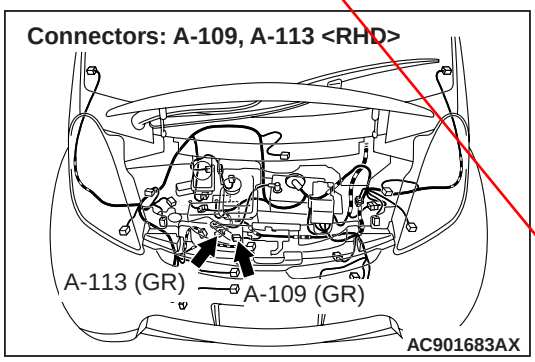

<Incorrect>

Inset the attached sheet 12

Connector: B-306 <LHD>

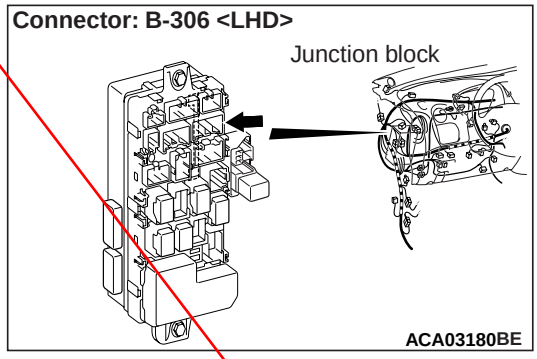

Connector: B-306 <RHD>

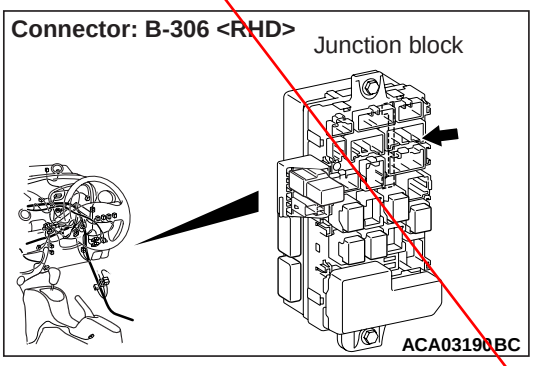

Connectors: C-101, C-113

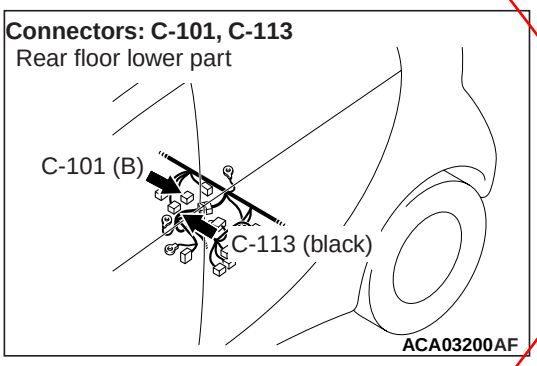

Connectors: G-21, G-23

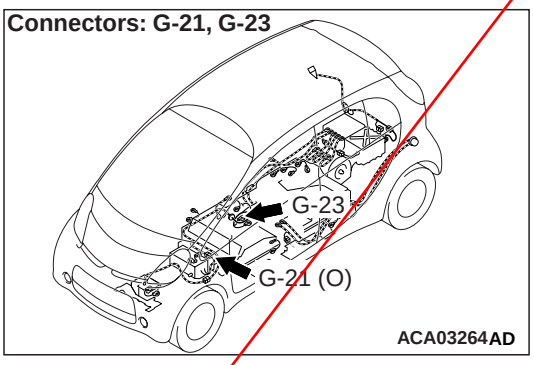

DIAGNOSIS CODE SET CONDITIONS

This code is set when the outlet temperature of the heater does not raise to a temperature higher than the inlet temperature by 3°C or more for 30 seconds or more.

PROBABLE CAUSES

- Insufficient volume of water heater fluid
- Malfunction of high-voltage fuse No. 3
- Poor connection of high-voltage fuse No. 3
- Malfunction of heater water pump assembly
- Malfunction of heater
- Damaged harness wires and connectors
- Malfunction of A/C control unit

DIAGNOSIS PROCEDURE

STEP 1. Check the water heater fluid volume.

Drive the heater in READY status and visually check the flow of the water fluid volume in the heater condenser tank.

Q: Is the water heater fluid volume correct?

YES : Go to Step 2.

NO : Make the water heater fluid volume correct.

STEP 2. M.U.T.-III actuator test, service data

Check the results of the actuator test with the service data.

ACTUATOR TEST

- Item 1: Electric water heater test mode

DATA LIST

- Item 7: Electric water heater inspection

NOTE: Because the heater test mode checks variations in the current, turn OFF the power supply to other equipment before the test.

Q: Is the check result normal?

YES : Go to Step 3.

NO : Go to Step 22.

STEP 3. Connector check: A-109 heater water pump assembly connector

Q: Is the check result normal?

YES : Go to Step 4.

NO : Repair the damaged connector.

STEP 4. Check the heater water pump assembly.

Refer to .

Q: Is the check result normal?

YES : Go to Step 5.

NO : Replace the heater water pump assembly.

STEP 5. M.U.T.-III data list

Check that the following service data display contents are normal.

- Item 8: Electric water pump output
- Item 10: Electric water heater inlet water temperature sensor
- Item 11: Electric water heater outlet water temperature sensor

Q: Is the check result normal?

<Incorrect>

Inset the attached sheet 12

YES : Go to Step 6.
NO : Go to Step 22.

STEP 6. Connector check: A-113 heater connector

Q: Is the check result normal?
YES : Go to Step 7.
NO : Repair the damaged connector.

STEP 7. Check the heater outlet water temperature sensor/heater inlet water temperature sensor.
Refer to .

Q: Is the check result normal?
YES : Go to Step 8.
NO : Replace the heater.

STEP 8. Connector check: A-114X heater water pump relay connector

Q: Is the check result normal?
YES : Go to Step 9.
NO : Repair the damaged connector.

STEP 9. Check the heater water pump relay.
Refer to .

Q: Is the heater water pump relay in good condition?
YES : Go to Step 10.
NO : Replace the heater water pump relay.

STEP 10. Measure the voltage at A-114X heater water pump relay connector.
(1) Disconnect the connector, and measure at the wiring harness side.
(2) Voltage between terminal 4 and body earth

OK: Battery voltage

Q: Is the check result normal?
YES : Go to Step 12.
NO : Go to Step 11.

STEP 11. Check the wiring harness between A-114X heater water pump relay connector terminal No. 4 and the fusible link (2).
- Check the power supply line for open circuit.

Q: Is the check result normal?
YES : Intermittent malfunction. Refer to GROUP 00 – How to Use Troubleshooting/ Inspection Service Points, – How to Cope with Intermittent Malfunctions .)
NO : Repair the wiring harness.

STEP 12. Measure the resistance at A-109 heater water pump assembly connector.
(1) Disconnect the connector, and measure at the wiring harness side.
(2) Resistance between terminal No. 2 and body earth

OK: Continuity exists (2 Ω or less)

Q: Is the check result normal?
YES : Go to Step 14.
NO : Go to Step 13.

STEP 13. Check the wiring harness between A-109 heater water pump assembly connector terminal No. 2 and the body earth.
- Check the earth wires for open circuit.

NOTE: Before checking the wiring harness, check the joint connector B-122 and repair it if necessary.

Q: Is the check result normal?
YES : Intermittent malfunction. Refer to GROUP 00 – How to Use Troubleshooting/ Inspection Service Points, – How to Cope with Intermittent Malfunctions .)
NO : Repair the wiring harness.

STEP 14. Check the wiring harness between A-104X heater water pump relay connector terminal No. 2 and B-305 junction block connector terminal No. 9.
- Check the power supply line for open circuit.

Q: Is the check result normal?
YES : Go to Step 15.
NO : Repair the wiring harness.

STEP 15. Connector check: C-101, C-115 A/C control unit connectors

Q: Is the check result normal?
YES : Go to Step 16.
NO : Repair the damaged connector.

STEP 16. Check the wiring harness between A-114X heater water pump relay connector terminal No. 1 and C-101 A/C control unit connector terminal No. 7.
- Check the power supply line for open circuit.

NOTE: Before checking the wiring harness, check the intermediate connector B-27 and repair it if necessary.

Q: Is the check result normal?
YES : Go to Step 17.
NO : Repair the wiring harness.

Attached sheet 11 (5/5)

STEP 17. Check the wiring harness between A-114X heater water pump relay connector terminal No. 3 and A-109 heater water pump assembly connector terminal No. 1.

- Check the power supply line for open circuit.

Q: Is the check result normal?
YES : Go to Step 18.
NO : Repair the wiring harness.

STEP 18. Check the wiring harness between A-109 heater water pump assembly connector terminal No. 1 and C-115 compressor & heater controller connector terminal No. 29.

- Check the input line for open circuit.

NOTE: Before checking the wiring harness, check the intermediate connector B-27 and repair it if necessary.

Q: Is the check result normal?
YES : Go to Step 19.
NO : Repair the wiring harness.

STEP 19. Connector check: A-113 heater connector

Q: Is the check result normal?
YES : Go to Step 20.
NO : Repair the damaged connector.

STEP 20. Check the wiring harness between A-113 heater connector terminal connector terminal No. 6, 7, 8, 1, 3, 4, 5 and C-101 A/C control unit connector terminal No. 19, 17, 18, C-113 A/C control unit connector terminal No. 25, 34, 35, 36.

- Check the input line for open circuit.

NOTE: Before checking the wiring harness, check the intermediate connector B-01 and repair it if necessary.

Q: Is the check result normal?
YES : Go to Step 21.
NO : Repair the wiring harness.

STEP 21. Check the high-voltage connector and wiring harness.

⚠ DANGER
Carry out the check on the high-voltage circuit while reading carefully the precautions on handling a high-voltage vehicle. Refer to .

⚠ DANGER
Wear the specified protection equipment during the check.

1. Shut down the high voltage. (Refer to GROUP 00 – Precautions before Service - Precautions on handling high-voltage vehicle .)
2. G-21 Check the heater connector.
3. G-23 Check the high-voltage fuse No. 3 connecting bolt for looseness.
4. Visually check and check the continuity of the high-voltage fuse No. 3.
5. Visually check the following high-voltage wiring harnesses for damage.
   - High-voltage wiring harness on main battery side
   - High-voltage harness heater side

Q: Is the check result normal?
YES : Go to Step 22.
NO <Malfunction of high-voltage fuse No. 3> : Replace the high-voltage fuse No. 3.
NO <Malfunction of wiring harness on heater side> : Replace the heater.
NO <Malfunction of wiring harness on main battery side> : Replace the main battery.

STEP 22. Check whether the diagnosis code is reset.

Q: Is the diagnosis code set?
YES : Go to Step 23.
NO : Intermittent malfunction. Refer to GROUP 00 – How to Use Troubleshooting/ Inspection Service Points, – How to Cope with Intermittent Malfunctions .)

STEP 23. After replacing the compressor & heater controller, check again if the diagnosis code is set.

Q: Is the diagnosis code set?
YES : Replace the heater.
NO : This diagnosis is complete.

<Incorrect>

Inset the attached sheet 12

Code No. B1108 Electric water heater fail 1

Heater water pump circuit

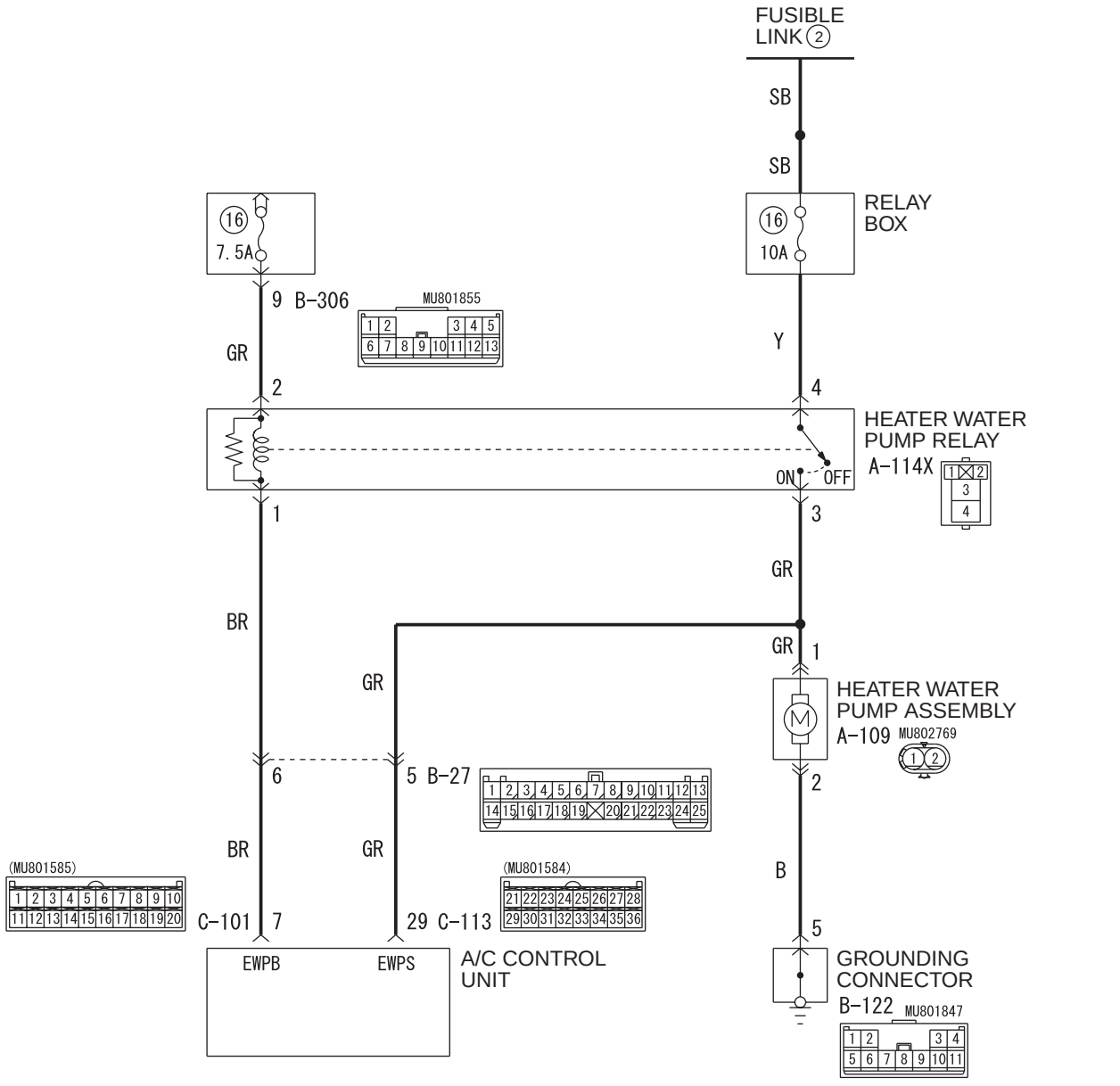

ACC00319
WDT55M007A

<Correct>

A/C Control Circuit

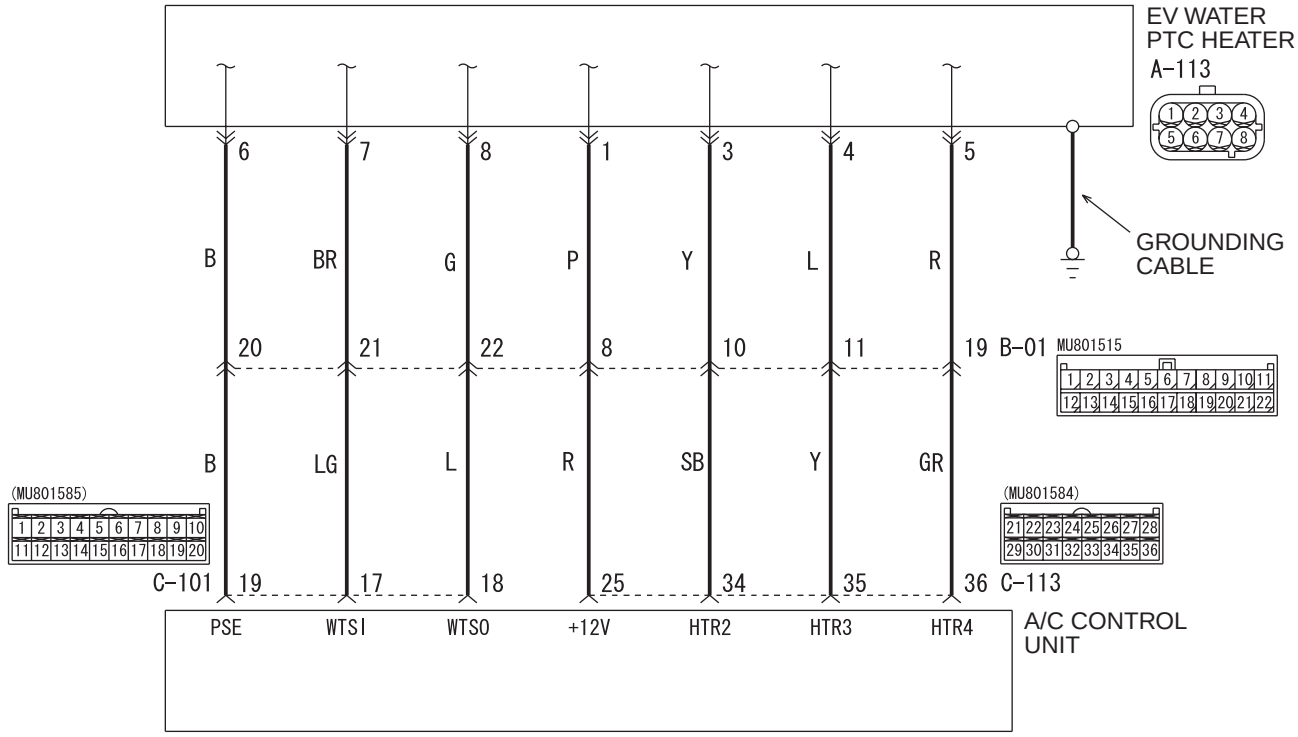

ACC00326
WDT55M008A

Connectors: A-109, 113 <LHD>

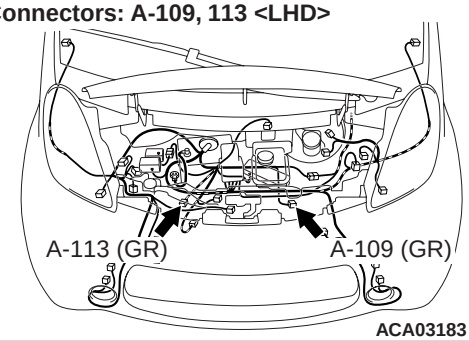

ACA03183 AO

Connector: B-122 <LHD>

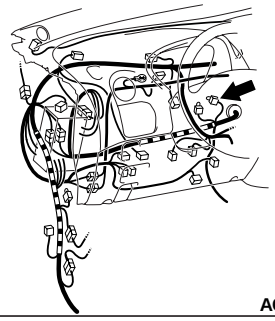

ACA03177AV

Connectors: A-109, A-113 <RHD>

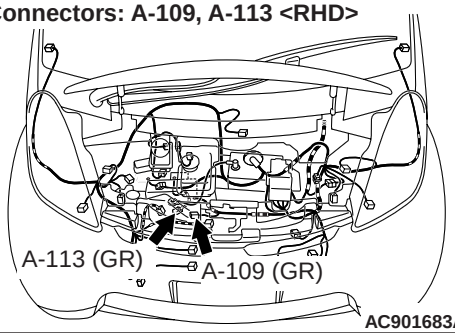

AC901683AX

Connector: B-122 <RHD>

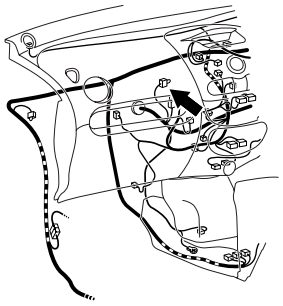

ACA03188 BI

<Correct>

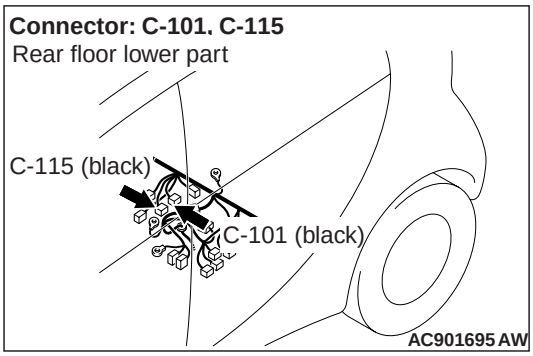

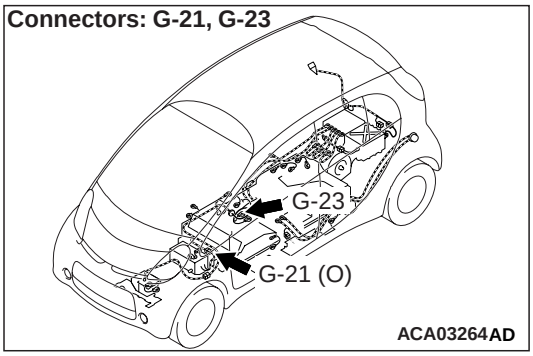

Diagnosis code set conditions
This code is set when the outlet temperature of the heater does not raise to a temperature higher than the inlet temperature by 3°C or more for 30 seconds or more.

PROBABLE CAUSES
- Insufficient volume of water heater fluid
- Malfunction of high-voltage fuse No. 3
- Poor connection of high-voltage fuse No. 3
- Malfunction of heater water pump assembly
- Malfunction of EV water PTC heater
- Damaged harness wires and connectors
- Malfunction of heater control unit

DIAGNOSIS PROCEDURE

STEP 1. Check the water heater fluid.
Refer to .

Q: Is the water heater fluid volume correct?
YES : Go to Step 2.
NO : Check the water heater fluid level, and add if necessary.

STEP 2. Check the water heater fluid flow.
Drive the heater in READY status and visually check the flow of the water fluid volume in the heater condenser tank.

Q: Is the water heater fluid confirmed?
YES : Go to Step 8.
NO <No heater water pump assembly running noise can be heard> : Go to Step 3.
NO <A heater water pump assembly running noise can be heard, but the water heater fluid cannot be confirmed> : Replace the heater water pump assembly.

STEP 3. Connector check: A-109 heater water pump assembly connector

Q: Is the check result normal?
YES : Go to Step 4.
NO : Repair the damaged connector.

STEP 4. Measure the resistance at A-109 heater water pump assembly connector.
(1) Disconnect the connector, and measure at the wiring harness side.
(2) Resistance between terminal No. 2 and body earth

OK: Continuity exists (2 Ω or less).

Q: Is the check result normal?
YES : Go to Step 7.
NO : Go to Step 5.

STEP 5. Connector check: B-122 grounding connector

Q: Is the check result normal?
YES : Go to Step 6.
NO : Repair the damaged connector.

STEP 6. Check the wiring harness between A-109 heater water pump assembly connector terminal No. 2 and B-122 grounding connector terminal No. 5.
- Check the earth wires for open circuit.

Q: Is the check result normal?
YES : Intermittent malfunction. (Refer to GROUP 00 – How to Use Troubleshooting/ Inspection Service Points, How to Cope with Intermittent Malfunctions .)
NO : Repair the wiring harness.

STEP 7. Check the heater water pump assembly.
Refer to .

Q: Is the check result normal?
YES : Intermittent malfunction. (Refer to GROUP 00 – How to Use Troubleshooting/ Inspection Service Points, How to Cope with Intermittent Malfunctions .)
NO : Replace the heater water pump assembly.

STEP 8. M.U.T.-III actuator test, service data
Check the results of the actuator test with the service data.

Actuator test
- Item 1: ELC.water heater test mode

Data list
- Item 7: ELC.water heater test status

NOTE: Because actuator test "item1: ELC. water heater test mode" checks variations in the current, turn OFF other electric equipment before the test.

Q: Is the check result normal?
YES : Go to Step 9.
NO : Go to Step 14.

STEP 9. M.U.T.-III data list
Check that the following service data display contents are normal.
- Item 10: ELC.water heater inlet sensor
- Item 11: ELC.water heater outlet sensor

Q: Is the check result normal?
YES : Go to Step 18.
NO : Go to Step 10.

STEP 10. Connector check: A-113 EV water PTC heater connector

Q: Is the check result normal?
YES : Go to Step 11.
NO : Repair the damaged connector.

STEP 11. Check the heater outlet water temperature sensor/heater inlet water temperature sensor.
Refer to .

Q: Is the check result normal?
YES : Go to Step 12.
NO : Replace the heater.

STEP 12. Connector check: C-101 A/C control unit connector

Q: Is the check result normal?
YES : Go to Step 13.
NO : Repair the damaged connector.

STEP 13. Check the wiring harness between A-113 EV water PTC heater connector terminal No. 6, 7, 8 and C-101 A/C control unit connector terminal No. 19, 17, 18.
- Check the power supply and the wiring harness wires to the sensor for damage.

NOTE: Before checking the wiring harness, check the intermediate connector B-01 and repair it if necessary.

Q: Is the check result normal?
YES : Go to Step 18.
NO : Repair the wiring harness.

STEP 14. Connector check: A-113 EV water PTC heater connector

Q: Is the check result normal?
YES : Go to Step 15.
NO : Repair the damaged connector.

STEP 15. Connector check: C-113 A/C control unit connector

Q: Is the check result normal?
YES : Go to Step 16.
NO : Repair the damaged connector.

STEP 16. Check the wiring harness between A-113 EV water PTC heater connector terminal No. 1, 2, 3, 4, 5 and C-113 A/C control unit connector terminal No. 25, 33, 34, 35, 36.
- Chek the heater 12V-power supply and the heater drive circuits for open circuit.

NOTE: Before checking the wiring harness, check the intermediate connector B-01 and repair it if necessary.

Q: Is the check result normal?
YES : Go to Step 17.
NO : Repair the wiring harness.

<Correct>

STEP 17. Check the high-voltage connector and wiring harness.

⚠ ***DANGER***

Carry out the check on the high-voltage circuit while reading carefully the precautions on handling a high-voltage vehicle. Refer to .

⚠ ***DANGER***

Wear the specified protection equipment during the check.

1. Shut down the high voltage. (Refer to GROUP 00 – Precautions before Service - Precautions on handling high-voltage vehicle .)
2. G-21 Check the heater connector.
3. G-23 Check the high-voltage fuse No. 3 connecting bolt for looseness.
4. Visually check and check the continuity of the high-voltage fuse No. 3.
5. Visually check the following high-voltage wiring harnesses for damage.
   - High-voltage wiring harness on main battery side
   - High-voltage harness heater side

Q: Is the check result normal?

<Correct>

YES : Go to Step 18.

NO <Malfunction of high-voltage fuse No. 3> : Replace the high-voltage fuse No. 3.

NO <Malfunction of wiring harness on heater side> : Replace the heater.

NO <Malfunction of wiring harness on main battery side> : Replace the main battery.

STEP 18. Check whether the diagnosis code is reset.

Q: Is the diagnosis code set?

YES : Go to Step 19.

NO : Intermittent malfunction. (Refer to GROUP 00 – How to Use Troubleshooting/ Inspection Service Points, How to Cope with Intermittent Malfunctions .)

STEP 19. After replacing the A/C control unit, check again if the diagnosis code is set.

Q: Is the diagnosis code set?

YES : Replace the heater.

NO : This diagnosis is complete.

Attached sheet 13 (1/5)

Code No. B1109 Electric water heater system abnormal stop 2

Weater heater system circuit

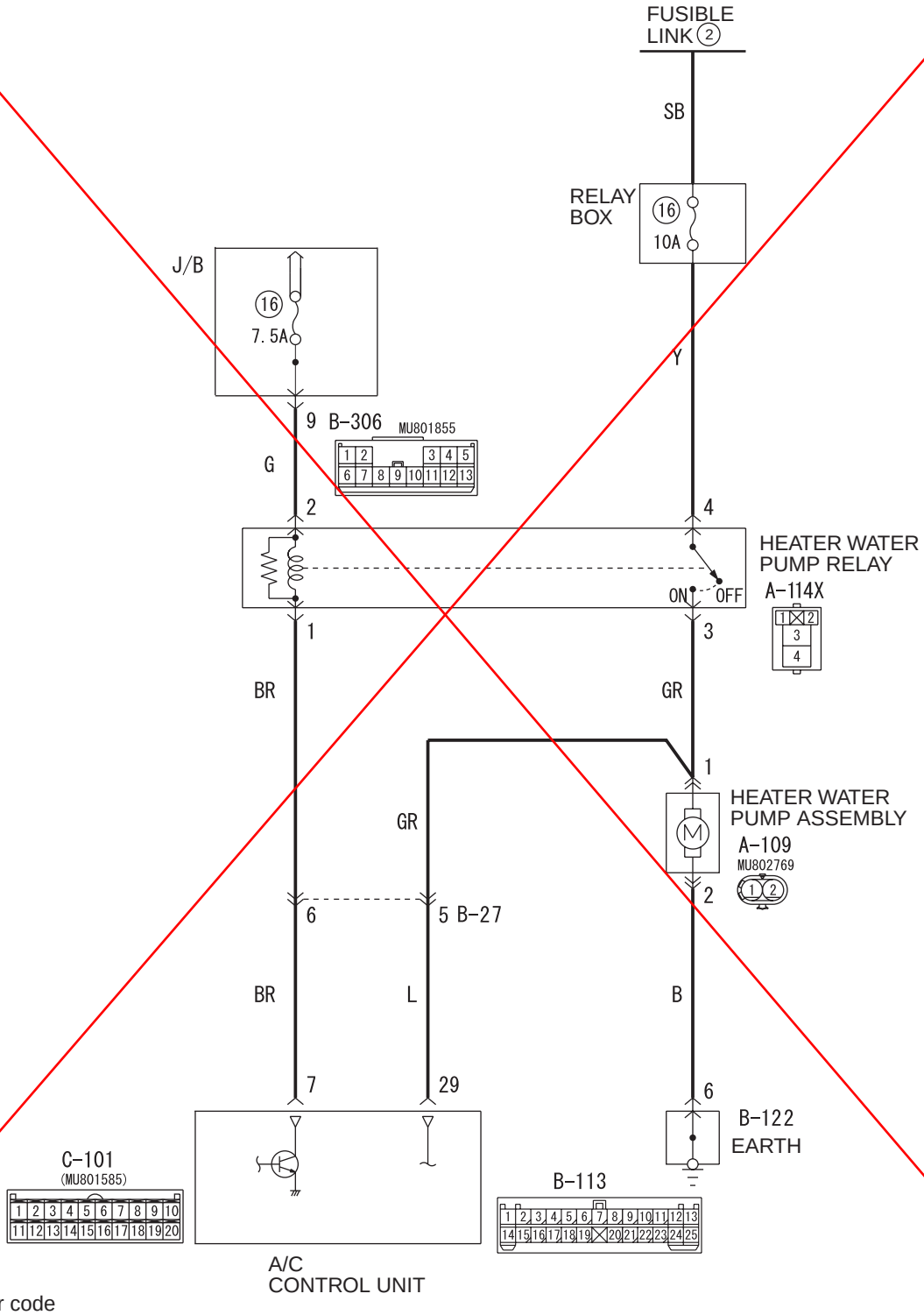

Wire colour code
B : Black LG : Light green G : Green L : Blue W : White Y : Yellow SB : Sky blue
BR : Brown O : Orange GR : Grey R : Red P : Pink V : Violet PU : Purple SI : Silver

ACA03321

<Incorrect>

Inset the attached sheet 14

Attached sheet 13 (2/5)

A/C control circuit

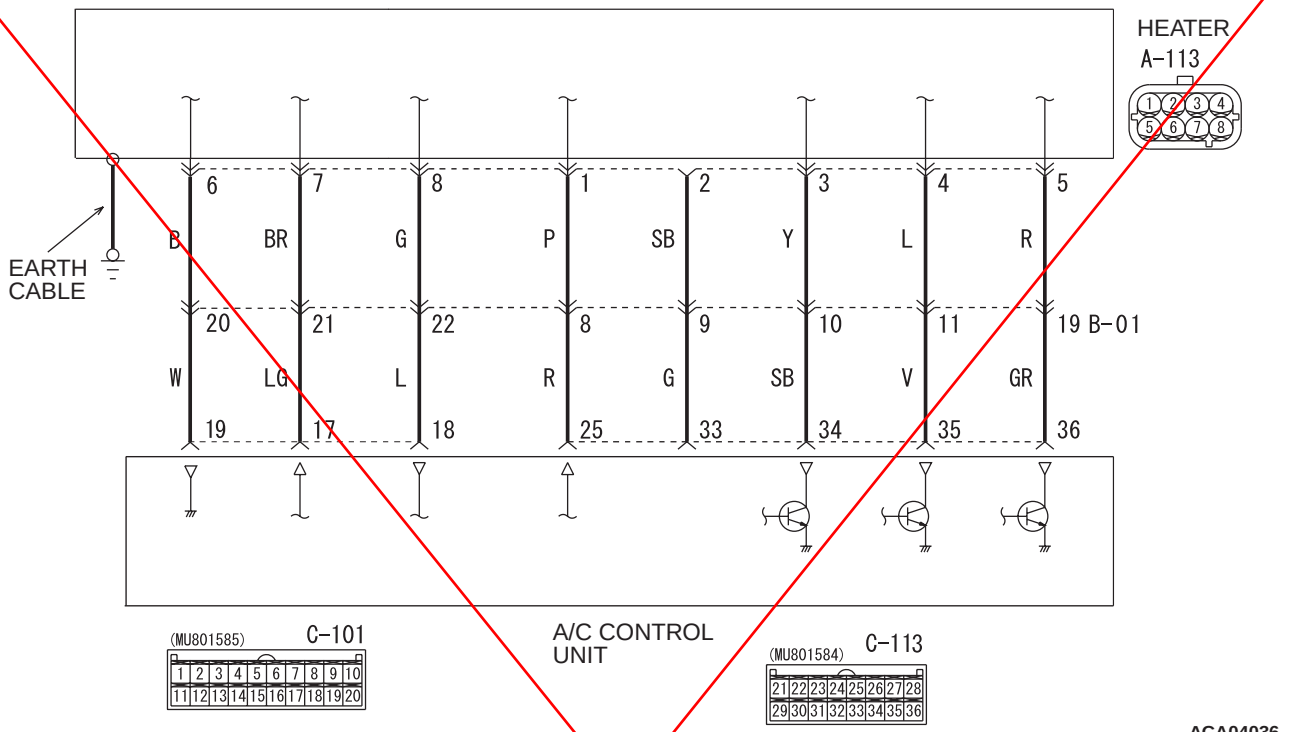

ACA04036

Wire colour code
B : Black LG : Light green G : Green L : Blue W : White Y : Yellow SB : Sky blue
BR : Brown O : Orange GR : Grey R : Red P : Pink V : Violet PU : Purple SI : Silver

Connector: A-114X <LHD>

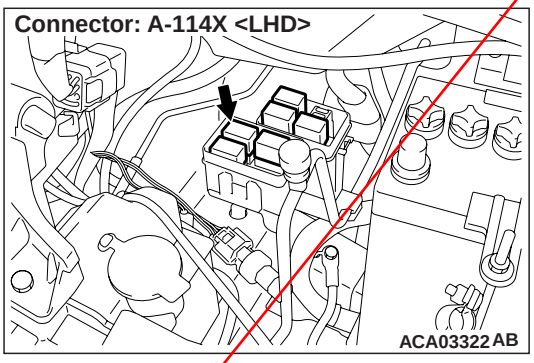

ACA03322AB

Connectors: A-109, 113 <LHD>

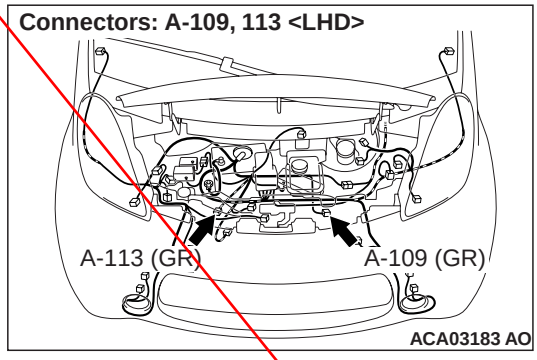

ACA03183AO

Connector: A-114X <RHD>

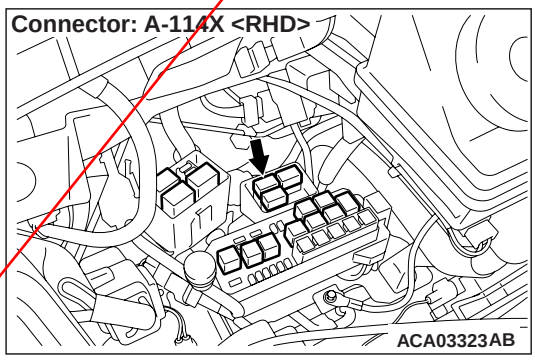

ACA03323AB

Connectors: A-109, A-113 <RHD>

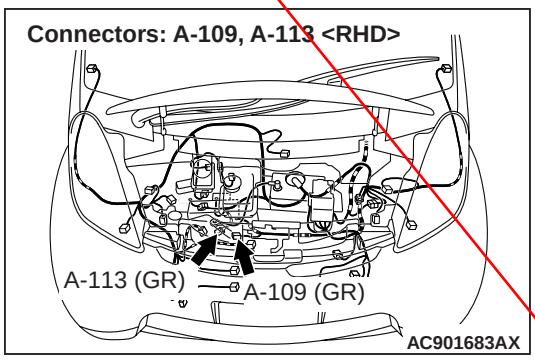

AC901683AX

<Incorrect>

Inset the attached sheet 14

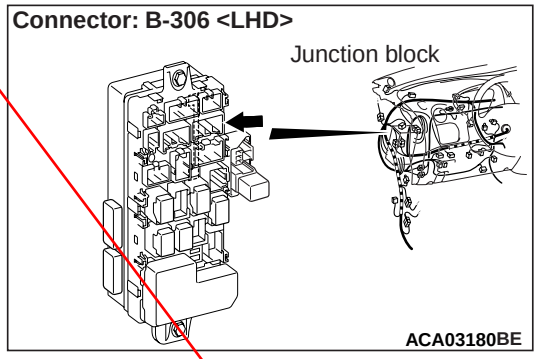

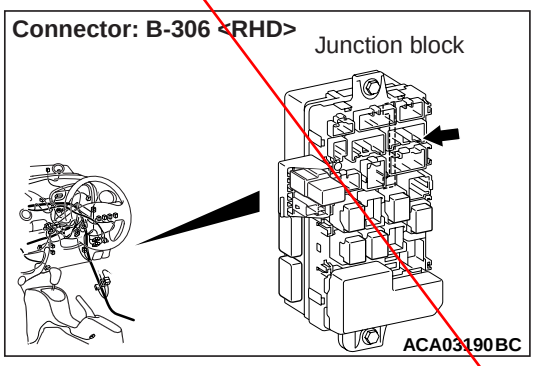

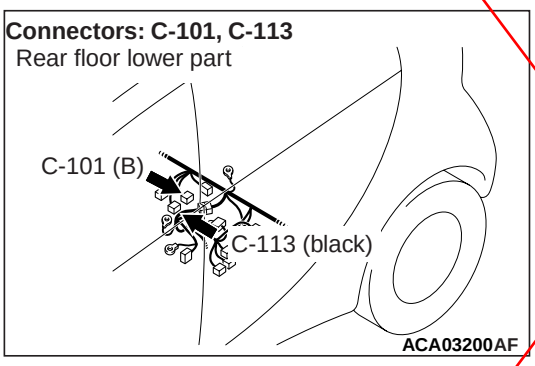

DIAGNOSIS CODE SET CONDITIONS

This code is set when the outlet temperature of the heater is higher than the inlet temperature by 40°C or more for 30 seconds or more after 30 seconds has passed since the start of the heater control.

PROBABLE CAUSES

- Insufficient volume of water heater fluid
- Malfunction of heater water pump assembly
- Malfunction of heater
- Damaged harness wires and connectors
- Malfunction of A/C control unit

DIAGNOSIS PROCEDURE

STEP 1. Check the water heater fluid volume.

Q: Is the water heater fluid volume correct?
YES : Go to Step 2.
NO : Make the water heater fluid volume correct.

STEP 2. Check the heater water pump assembly.

Drive the heater in READY status and visually check the flow of the water fluid volume in the heater condenser tank.

Q: Is the heater water pump assembly in good condition?
YES : Go to Step 3.
NO : Replace the heater water pump assembly.

STEP 3. M.U.T.-III data list

Check that the following service data display contents are normal.

- Item 8: Electric water pump output
- Item 10: Electric water heater inlet water temperature sensor
- Item 11: Electric water heater outlet water temperature sensor

Q: Is the check result normal?
YES : Go to Step 4.
NO : Go to Step 19.

STEP 4. Connector check: A-113 heater connector

Q: Is the check result normal?
YES : Go to Step 5.
NO : Repair the damaged connector.

STEP 5. Check the heater outlet water temperature sensor/heater inlet water temperature sensor.

Refer to .

Q: Is the check result normal?
YES : Go to Step 6.
NO : Replace the heater.

STEP 6. Connector check: A-114X heater water pump relay connector

Q: Is the check result normal?
YES : Go to Step 7.
NO : Repair the damaged connector.

STEP 7. Check the heater water pump relay.

Refer to .

Q: Is the heater water pump relay in good condition?
YES : Go to Step 8.
NO : Replace the heater water pump relay.

STEP 8. Measure the voltage at A-114X heater water pump relay connector.

(1) Disconnect the connector, and measure at the

wiring harness side.
(2) Voltage between terminal 4 and body earth

OK: Battery voltage

Q: Is the check result normal?
YES : Go to Step 10.
NO : Go to Step 9.

STEP 9. Check the wiring harness between A-114X heater water pump relay connector terminal No. 4 and the fusible link (2).
- Check the power supply line for open circuit.

Q: Is the check result normal?
YES : Intermittent malfunction. Refer to GROUP 00 – How to Use Troubleshooting/ Inspection Service Points, – How to Cope with Intermittent Malfunctions .)
NO : Repair the wiring harness.

STEP 10. Measure the resistance at A-109 heater water pump assembly connector.
(1) Disconnect the connector, and measure at the wiring harness side.
(2) Resistance between terminal No. 2 and body earth

OK: Continuity exists (2 Ω or less)

Q: Is the check result normal?
YES : Go to Step 12.
NO : Go to Step 11.

STEP 11. Check the wiring harness between A-109 heater water pump assembly connector terminal No. 2 and the body earth.
- Check the earth wires for open circuit.

NOTE: Before checking the wiring harness, check the earth connector B-122 and repair it if necessary.

Q: Is the check result normal?
YES : Intermittent malfunction. Refer to GROUP 00 – How to Use Troubleshooting/ Inspection Service Points, – How to Cope with Intermittent Malfunctions .)
NO : Repair the wiring harness.

STEP 12. Check the wiring harness between A-114X heater water pump relay connector terminal No. 2 and B-306 junction block connector terminal No. 9.
- Check the power supply line for open circuit.

Q: Is the check result normal?
YES : Go to Step 13.
NO : Repair the wiring harness.

STEP 13. Connector check: C-101, C-113 compressor & heater controller connectors

Q: Is the check result normal?
YES : Go to Step 14.
NO : Repair the damaged connector.

STEP 14. Check the wiring harness between A-114X heater water pump relay connector terminal No. 1 and C-101 compressor & heater controller connector terminal No. 7.
- Check the power supply line for open circuit.

NOTE: Before checking the wiring harness, check the intermediate connector B-27 and repair it if necessary.

Q: Is the check result normal?
YES : Go to Step 15.
NO : Repair the wiring harness.

STEP 15. Check the wiring harness between A-114X heater water pump relay connector terminal No. 3 and A-109 heater water pump assembly connector terminal No. 1.
- Check the power supply line for open circuit.

Q: Is the check result normal?
YES : Go to Step 16.
NO : Repair the wiring harness.

STEP 16. Check the wiring harness between A-109 heater water pump assembly connector terminal No. 1 and C-113 A/C control unit connector terminal No. 29.
- Check the input line for open circuit.

NOTE: Before checking the wiring harness, check the intermediate connector B-27and repair it if necessary.

Q: Is the check result normal?
YES : Go to Step 17.
NO : Repair the wiring harness.

STEP 17. Check the wiring harness between A-113 heater connector terminal connector terminal No. 6, 7, 8, 1, 3, 4, 5 and C-101 compressor & heater controller connector terminal No. 19, 17, 18, C-113 A/C control unit connector terminal No. 25, 34, 35, 36.
- Check the input line for open circuit.

NOTE: Before checking the wiring harness, check the intermediate connector B-01 and repair it if necessary.

Q: Is the check result normal?

<Incorrect>
Inset the attached sheet 14

Attached sheet 13 (5/5)

YES : Go to Step 18.
NO : Repair the wiring harness.

STEP 18. Check whether the diagnosis code is reset.

Q: Is the diagnosis code set?
YES : Go to Step 19.
NO : Intermittent malfunction. Refer to GROUP 00 – How to Use Troubleshooting/ Inspection Service Points, – How to Cope with Intermittent Malfunctions .)

STEP 19. After replacing the compressor & heater controller, check again if the diagnosis code is set.

Q: Is the diagnosis code set?
YES : Replace the heater.
NO : This diagnosis is complete.

<Incorrect>

Inset the attached sheet 14

Code No. B1109 Electric water heater fail 2

Heater water pump circuit

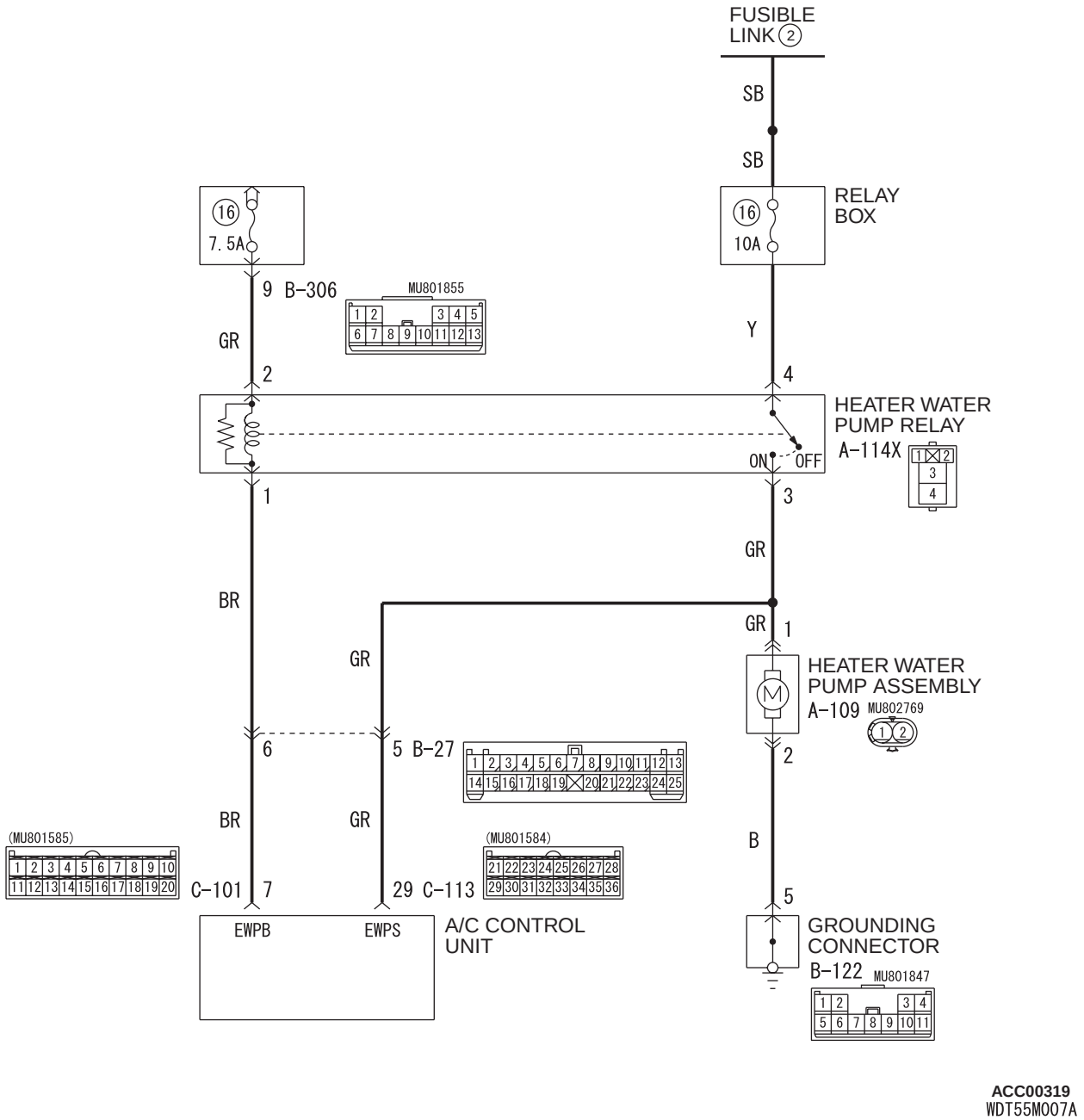

<Correct>

Attached sheet 14 (2/4)

A/C Control Circuit

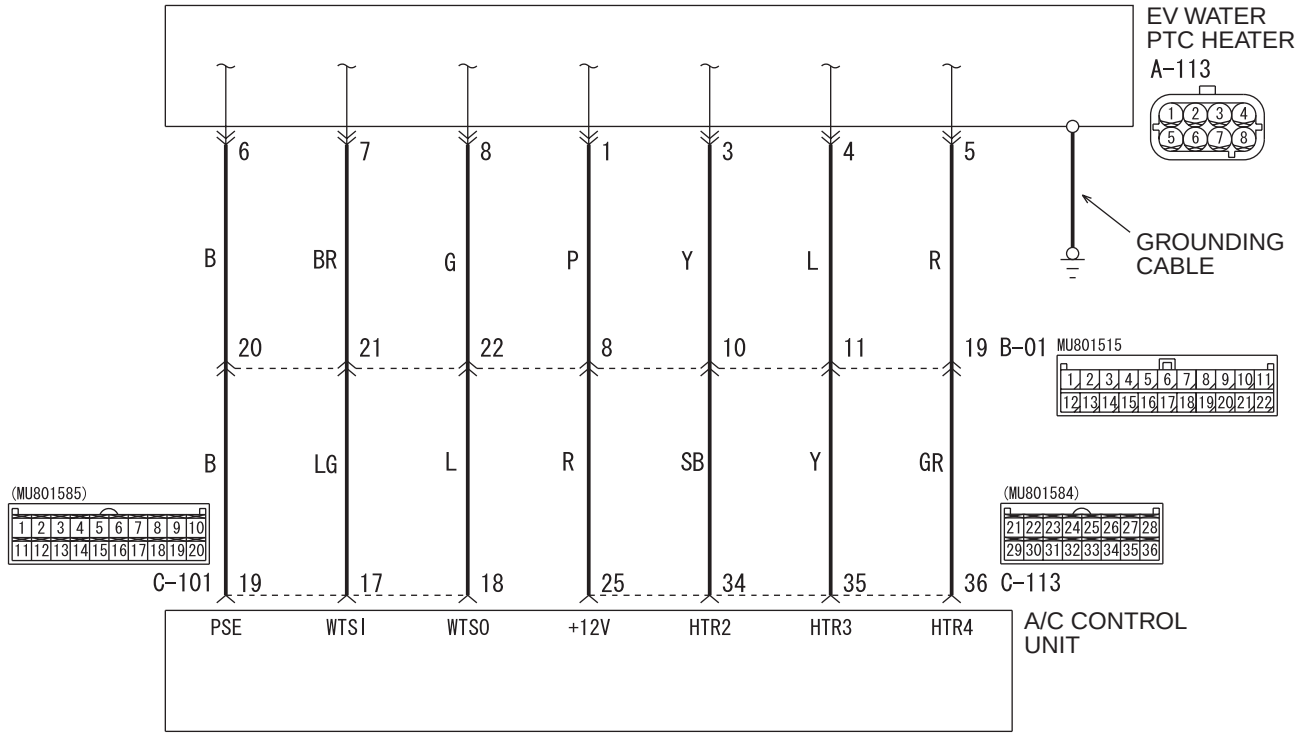

ACC00326
WDT55M008A

Connectors: A-109, 113 <LHD>

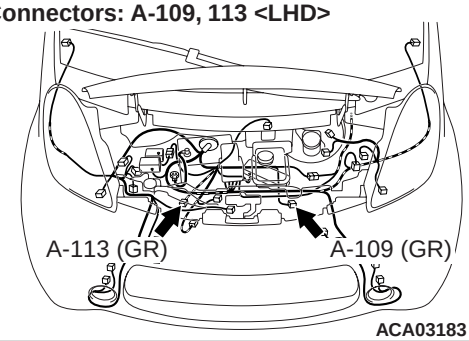

ACA03183 AO

Connector: B-122 <LHD>

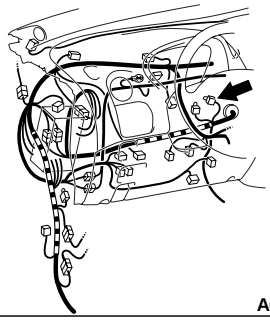

ACA03177AV

Connectors: A-109, A-113 <RHD>

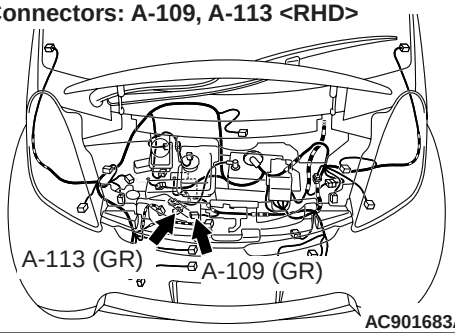

AC901683AX

Connector: B-122 <RHD>

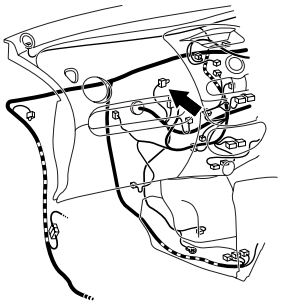

ACA03188 BI

<Correct>

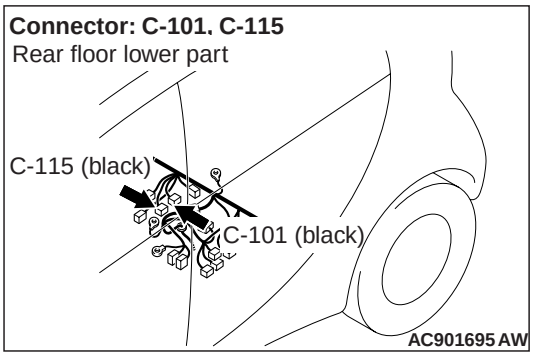

Diagnosis code set conditions
This code is set when the outlet temperature of the heater is higher than the inlet temperature by 40°C or more for 30 seconds or more after 30 seconds has passed since the start of the heater control.

PROBABLE CAUSES
- Insufficient volume of water heater fluid
- Malfunction of heater water pump assembly
- Malfunction of EV water PTC heater
- Damaged harness wires and connectors
- Malfunction of A/C control unit

DIAGNOSIS PROCEDURE

STEP 1. Check the water heater fluid.
Refer to .

Q: Is the water heater fluid volume correct?
YES : Go to Step 2.
NO : Check the water heater fluid level, and add if necessary.

STEP 2. Check the water heater fluid flow.
Drive the heater in READY status and visually check the flow of the water fluid volume in the heater condenser tank.

Q: Is the water heater fluid confirmed?
YES : Go to Step 8.
NO <No heater water pump assembly running noise can be heard> : Go to Step 3.
NO <A heater water pump assembly running noise can be heard, but the water heater fluid cannot be confirmed> : Replace the heater water pump assembly.

STEP 3. Connector check: A-109 heater water pump assembly connector

Q: Is the check result normal?
YES : Go to Step 5.
NO : Repair the damaged connector.

STEP 4. Measure the resistance at A-109 heater water pump assembly connector.
(1) Disconnect the connector, and measure at the wiring harness side.
(2) Resistance between terminal No. 2 and body earth

OK: Continuity exists (2 Ω or less).

Q: Is the check result normal?
YES : Go to Step 7.
NO : Go to Step 5.

STEP 5. Connector check: B-122 grounding connector

Q: Is the check result normal?
YES : Go to Step 6.
NO : Repair the damaged connector.

STEP 6. Check the wiring harness between A-109 heater water pump assembly connector terminal No. 2 and B-122 grounding connector terminal No. 5.
- Check the earth wires for open circuit.

Q: Is the check result normal?
YES : Intermittent malfunction. (Refer to GROUP 00 – How to Use Troubleshooting/ Inspection Service Points, How to Cope with Intermittent Malfunctions .)
NO : Repair the wiring harness.

STEP 7. Check the heater water pump assembly.
Refer to .

Q: Is the check result normal?
YES : Intermittent malfunction. (Refer to GROUP 00 – How to Use Troubleshooting/ Inspection Service Points, How to Cope with Intermittent Malfunctions .)
NO : Replace the heater water pump assembly.

STEP 8. M.U.T.-III data list
Check that the following service data display contents are normal.

Actuator test
- Item 1: ELC.water heater test mode

Data list
- Item 7: ELC.water heater test status

Q: Is the check result normal?
YES : Go to Step 13.
NO : Go to Step 9.

<Correct>

STEP 9. Connector check: A-113 EV water PTC heater connector

Q: Is the check result normal?
YES : Go to Step 10.
NO : Repair the damaged connector.

STEP 10. Check the heater outlet water temperature sensor/heater inlet water temperature sensor.
Refer to .

Q: Is the check result normal?
YES : Go to Step 11.
NO : Replace the heater.

STEP 11. Connector check: C-101 A/C control unit controller connector

Q: Is the check result normal?
YES : Go to Step 12.
NO : Repair the damaged connector.

STEP 12. Check the wiring harness between A-113 EV water PTC heater connector terminal No. 6, 7, 8 and C-101 A/C control unit controller connector terminal No. 19, 17, 18.
- Check the wiring harness for damage.

NOTE: Before checking the wiring harness, check the intermediate connector B-01 and repair it if necessary.

Q: Is the check result normal?
YES : Go to Step 16.
NO : Repair the wiring harness.

STEP 13. Connector check: A-113 EV water PTC heater connector

Q: Is the check result normal?
YES : Go to Step 14.
NO : Repair the damaged connector.

STEP 14. Connector check: C-113 A/C control unit connector

Q: Is the check result normal?
YES : Go to Step 15.
NO : Repair the damaged connector.

STEP 15. Check the wiring harness between A-113 EV water PTC heater connector terminal No. 1, 2, 3, 4, 5 and C-113 A/C control unit connector terminal No. 25, 33, 34, 35, 36.
- Check the heater drive circuit for short to earth.

NOTE: Before checking the wiring harness, check the intermediate connector B-01 and repair it if necessary.

Q: Is the check result normal?
YES : Go to Step 16.
NO : Repair the wiring harness.

STEP 16. Check whether the diagnosis code is reset.

Q: Is the diagnosis code set?
YES : Go to Step 17.
NO : Intermittent malfunction. (Refer to GROUP 00 – How to Use Troubleshooting/ Inspection Service Points, How to Cope with Intermittent Malfunctions .)

STEP 17. After replacing the A/C control unit, check again if the diagnosis code is set.

Q: Is the diagnosis code set?
YES : Replace the heater.
NO : This diagnosis is complete.

<Correct>

Attached sheet 15 (1/5)

Code No. B1110 Electric water heater system abnormal stop 3

Weater heater system circuit

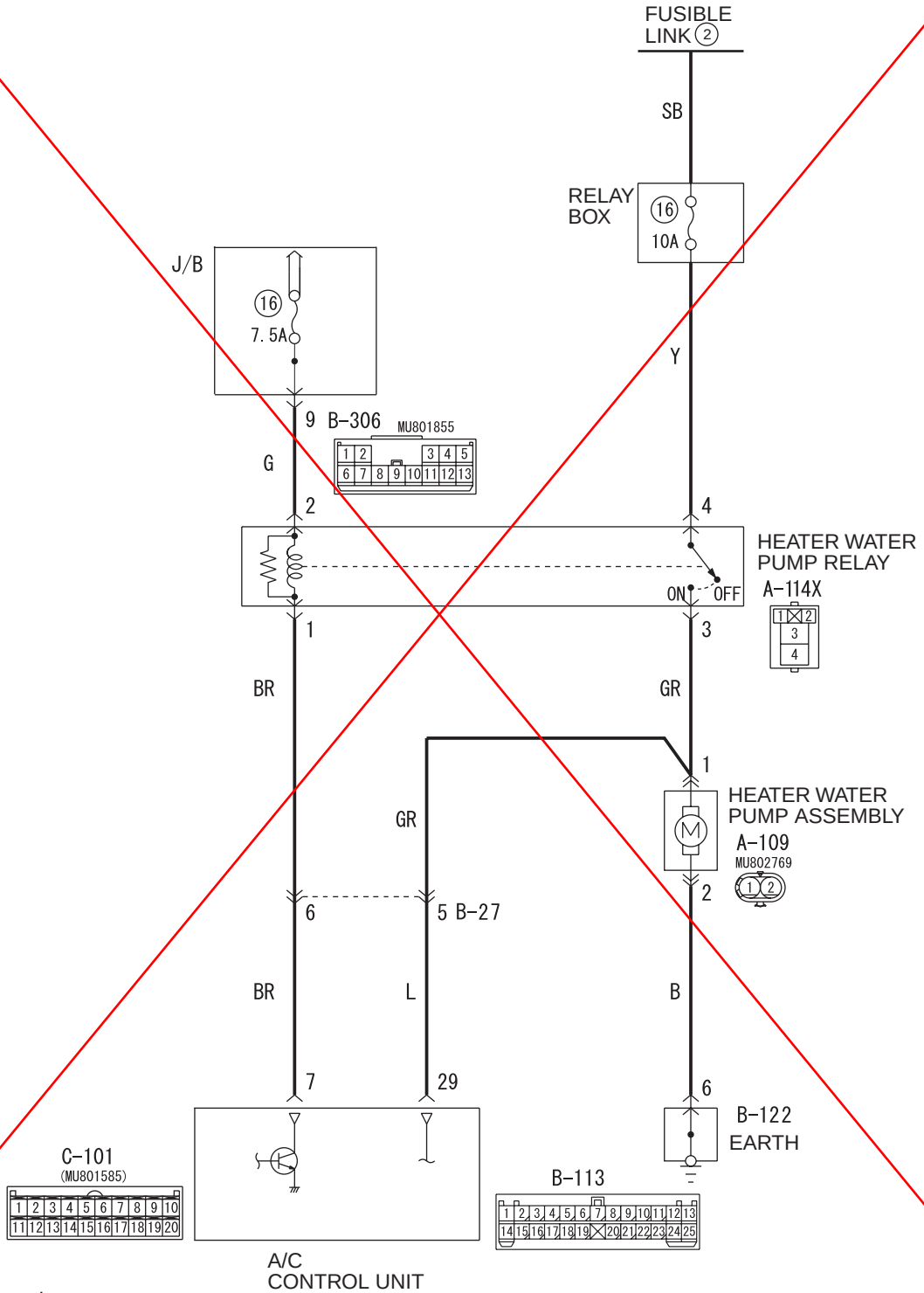

Wire colour code
B : Black LG : Light green G : Green L : Blue W : White Y : Yellow SB : Sky blue
BR : Brown O : Orange GR : Grey R : Red P : Pink V : Violet PU : Purple SI : Silver

ACA03321

<Incorrect>

Inset the attached sheet 16

Attached sheet 15 (2/5)

A/C control circuit

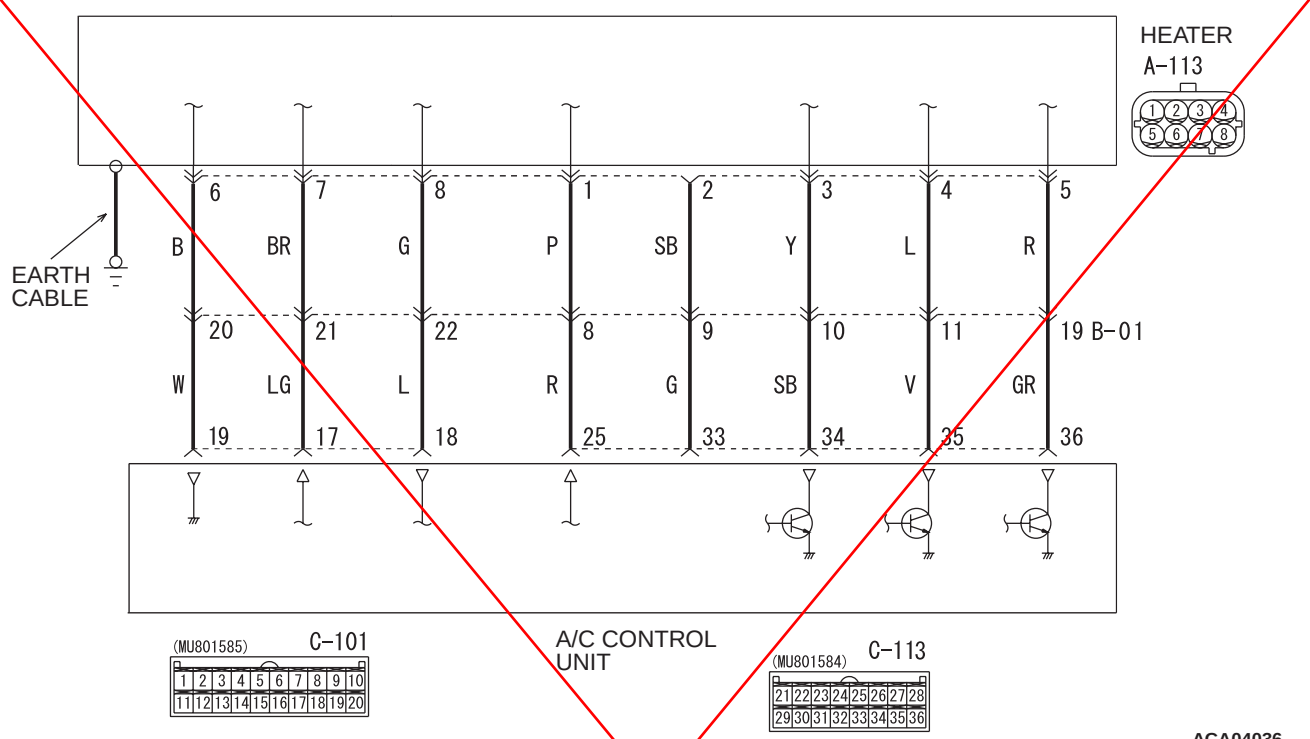

ACA04036

Wire colour code
B : Black LG : Light green G : Green L : Blue W : White Y : Yellow SB : Sky blue
BR : Brown O : Orange GR : Grey R : Red P : Pink V : Violet PU : Purple SI : Silver

Connector: A-114X <LHD>

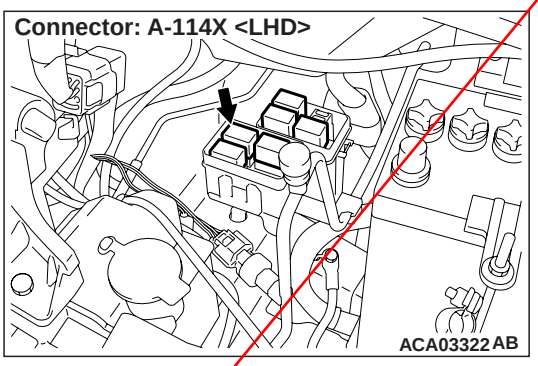

ACA03322AB

Connectors: A-109, 113 <LHD>

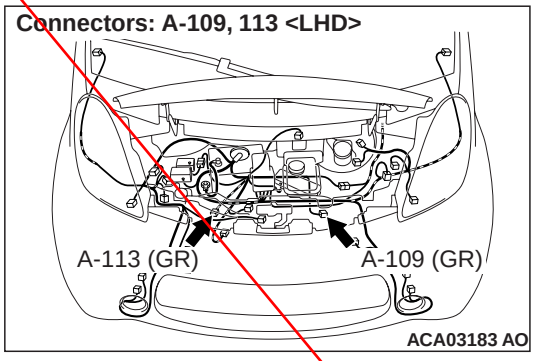

ACA03183AO

Connector: A-114X <RHD>

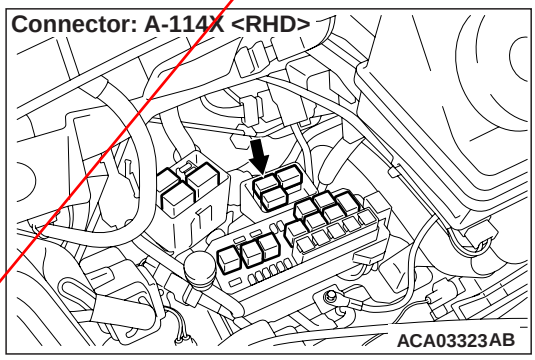

ACA03323AB

Connectors: A-109, A-113 <RHD>

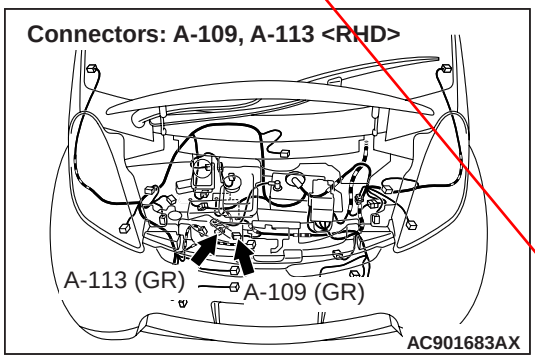

AC901683AX

<Incorrect>

Inset the attached sheet 16

Connector: B-18 <LHD>

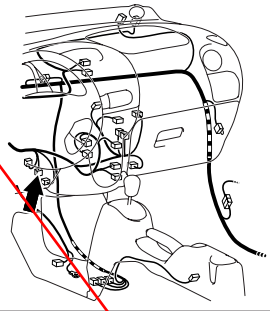

ACA03178BA

Connector: B-18 <RHD>

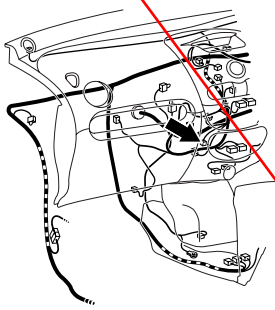

ACA03188BA

Connector: B-306 <LHD>

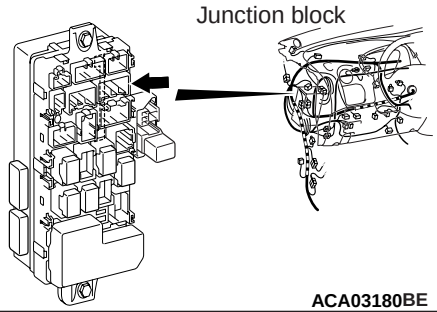

ACA03180BE

Connector: B-306 <RHD>

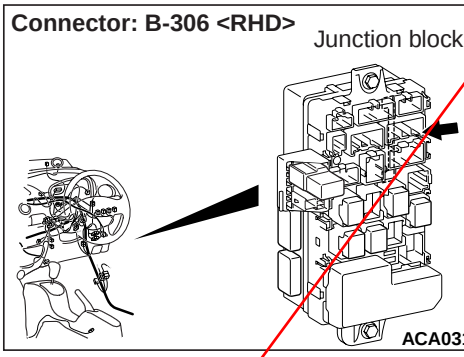

ACA03190BC

Connectors: C-101, C-113

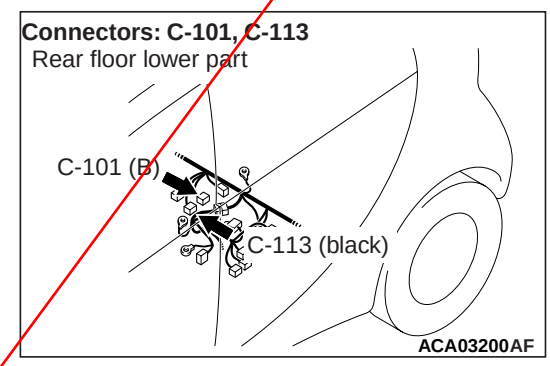

ACA03200AF

DIAGNOSIS CODE SET CONDITIONS

This code is set when one of the heater water temperatures at the inlet, outlet, or heater core reaches 100°C or more for 3 seconds or more.

PROBABLE CAUSES

- Insufficient volume of water heater fluid
- Malfunction of heater water pump assembly
- Malfunction of heater
- Damaged harness wires and connectors
- Malfunction of A/C control unit

DIAGNOSIS PROCEDURE

STEP 1. Check the water heater fluid volume.

Q: Is the water heater fluid volume correct?
YES : Go to Step 2.
NO : Make the water heater fluid volume correct.

STEP 2. Check the heater water pump assembly.

Drive the heater in READY status and visually check the flow of the water fluid volume in the heater condenser tank.

Q: Is the heater water pump assembly in good condition?
YES : Go to Step 3.
NO : Replace the heater water pump assembly.

STEP 3. M.U.T.-III data list

Check that the following service data display contents are normal.

- Item 8: Electric water pump output
- Item 10: Electric water heater inlet water temperature sensor
- Item 11: Electric water heater outlet water temperature sensor

Q: Is the check result normal?
YES : Go to Step 4.
NO : Go to Step 22.

STEP 4. Connector check: A-113 heater connector

Q: Is the check result normal?
YES : Go to Step 5.
NO : Repair the damaged connector.

STEP 5. Check the heater outlet water temperature sensor/heater inlet water temperature sensor.

Refer to .

Q: Is the check result normal?

<Incorrect>

Inset the attached sheet 16

YES : Go to Step 6.
NO : Replace the heater.

STEP 6. Heater controller (A/C-ECU) M.U.T.-III service data
Check that the following service data display contents are normal.
- Item 24: Coolant temperature sensor

Q: Is the check result normal?
YES : Go to Step 9.
NO : Go to Step 7.

STEP 7. Connector check: B-18 heater water temperature connector

Q: Is the check result normal?
YES : Go to Step 8.
NO : Repair the damaged connector.

STEP 8. Check the heater water temperature sensor.
Refer to .

Q: Is the check result normal?
YES : Go to Step 9.
NO : Replace the heater.

STEP 9. Connector check: A-114X heater water pump relay connector

Q: Is the check result normal?
YES : Go to Step 10.
NO : Repair the damaged connector.

STEP 10. Check the heater water pump relay.
Refer to .

Q: Is the heater water pump relay in good condition?
YES : Go to Step 11.
NO : Replace the heater water pump relay.

STEP 11. Measure the voltage at A-114X heater water pump relay connector.
(1) Disconnect the connector, and measure at the wiring harness side.
(2) Voltage between terminal 4 and body earth

OK: Battery voltage

Q: Is the check result normal?
YES : Go to Step 13.
NO : Go to Step 12.

STEP 12. Check the wiring harness between A-114X heater water pump relay connector terminal No. 4 and the fusible link (2).
- Check the power supply line for open circuit.

Q: Is the check result normal?
YES : Intermittent malfunction. Refer to GROUP 00 – How to Use Troubleshooting/ Inspection Service Points, – How to Cope with Intermittent Malfunctions .)
NO : Repair the wiring harness.

STEP 13. Measure the resistance at A-109 heater water pump assembly connector.
(1) Disconnect the connector, and measure at the wiring harness side.
(2) Resistance between terminal No. 2 and body earth

OK: Continuity exists (2 Ω or less)

Q: Is the check result normal?
YES : Go to Step 15.
NO : Go to Step 14.

STEP 14. Check the wiring harness between A-109 heater water pump assembly connector terminal No. 2 and the body earth.
- Check the earth wires for open circuit.

NOTE: Before checking the wiring harness, check the earth connector B-122 and repair it if necessary.

Q: Is the check result normal?
YES : Intermittent malfunction. Refer to GROUP 00 – How to Use Troubleshooting/ Inspection Service Points, – How to Cope with Intermittent Malfunctions .)
NO : Repair the wiring harness.

STEP 15. Check the wiring harness between A-104X heater water pump relay connector terminal No. 2 and B-306 junction block connector terminal No. 9.
- Check the power supply line for open circuit.

Q: Is the check result normal?
YES : Go to Step 16.
NO : Repair the wiring harness.

STEP 16. Connector check: C-101, C-113 compressor & heater controller connectors

Q: Is the check result normal?
YES : Go to Step 17.
NO : Repair the damaged connector.

<Incorrect>

Inset the attached sheet 16

Attached sheet 15 (5/5)

STEP 17. Check the wiring harness between A-114X heater water pump relay connector terminal No. 1 and C-101 A/C control unit connector terminal No. 7.

- Check the power supply line for open circuit.

NOTE: Before checking the wiring harness, check the intermediate connector B-27 and repair it if necessary.

Q: Is the check result normal?
YES : Go to Step 18.
NO : Repair the wiring harness.

STEP 18. Check the wiring harness between A-114X heater water pump relay connector terminal No. 3 and A-109 heater water pump assembly connector terminal No. 1.

- Check the power supply line for open circuit.

Q: Is the check result normal?
YES : Go to Step 19.
NO : Repair the wiring harness.

STEP 19. Check the wiring harness between A-109 heater water pump assembly connector terminal No. 1 and C-113 A/C control unit connector terminal No. 29.

- Check the input line for open circuit.

NOTE: Before checking the wiring harness, check the intermediate connector B-27 and repair it if necessary.

Q: Is the check result normal?
YES : Go to Step 20.
NO : Repair the wiring harness.

STEP 20. Connector check: A-113 heater connector

Q: Is the check result normal?
YES : Go to Step 21.
NO : Repair the damaged connector.

STEP 21. Check the wiring harness between A-113 heater connector terminal connector terminal No. 6, 7, 8, 1, 3, 4, 5 and C-101 A/C control unit connector terminal No. 19, 17, 18, C-113 compressor & heater controller connector terminal No. 25, 34, 35, 36.

- Check the input line for open circuit.

NOTE: Before checking the wiring harness, check the intermediate connector B-01 and repair it if necessary.

Q: Is the check result normal?
YES : Go to Step 22.
NO : Repair the wiring harness.

STEP 22. Check whether the diagnosis code is reset.

Q: Is the diagnosis code set?
YES : Go to Step 23.
NO : Intermittent malfunction. Refer to GROUP 00 – How to Use Troubleshooting/ Inspection Service Points, – How to Cope with Intermittent Malfunctions .)

STEP 23. After replacing the compressor & heater controller, check again if the diagnosis code is set.

Q: Is the diagnosis code set?
YES : Replace the heater.
NO : This diagnosis is complete.

<Incorrect>

Inset the attached sheet 16

Code No. B1110 Electric water heater fail 3

Heater water pump circuit

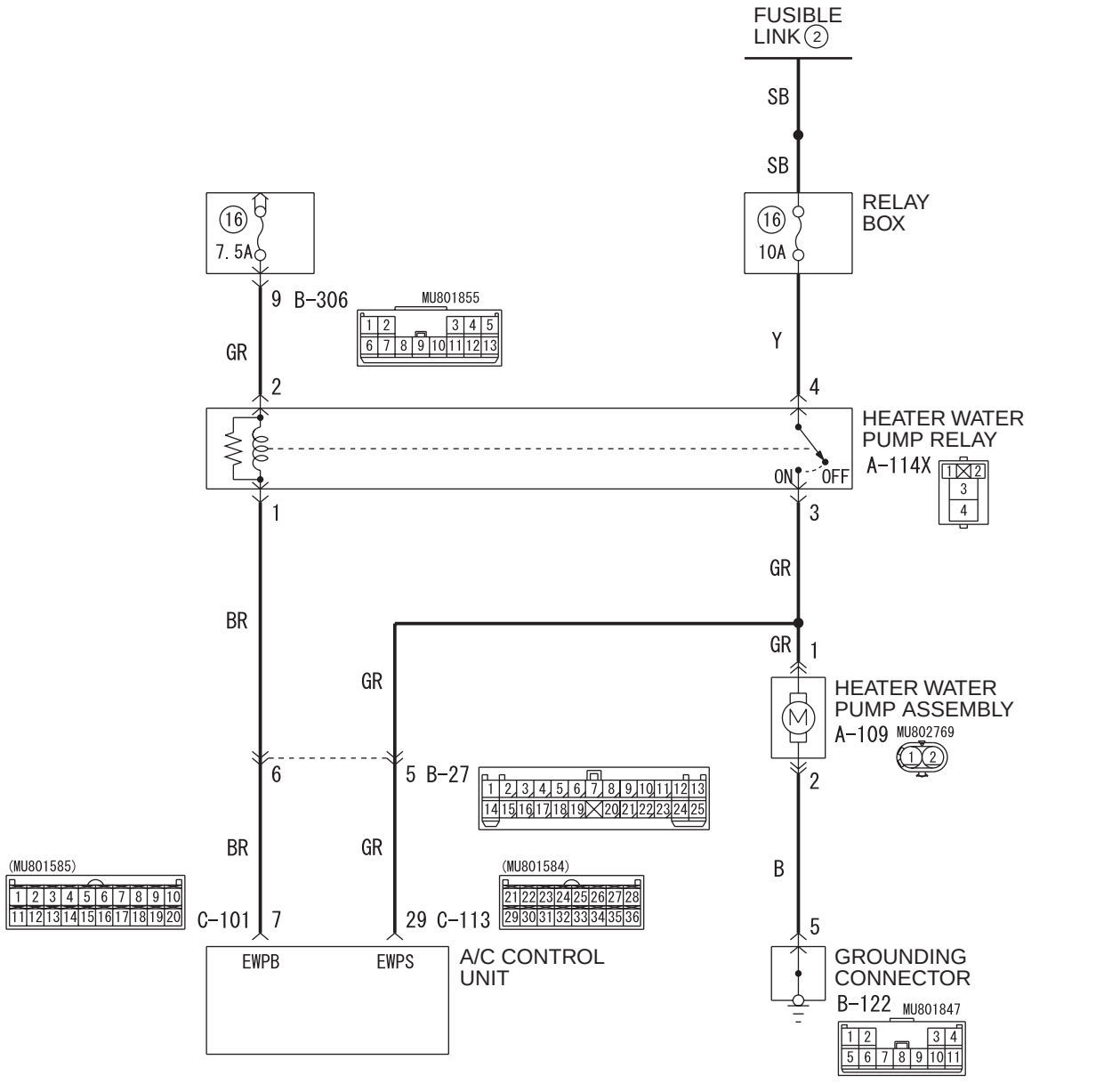

ACC00319
WDT55M007A

<Correct>

A/C Control Circuit

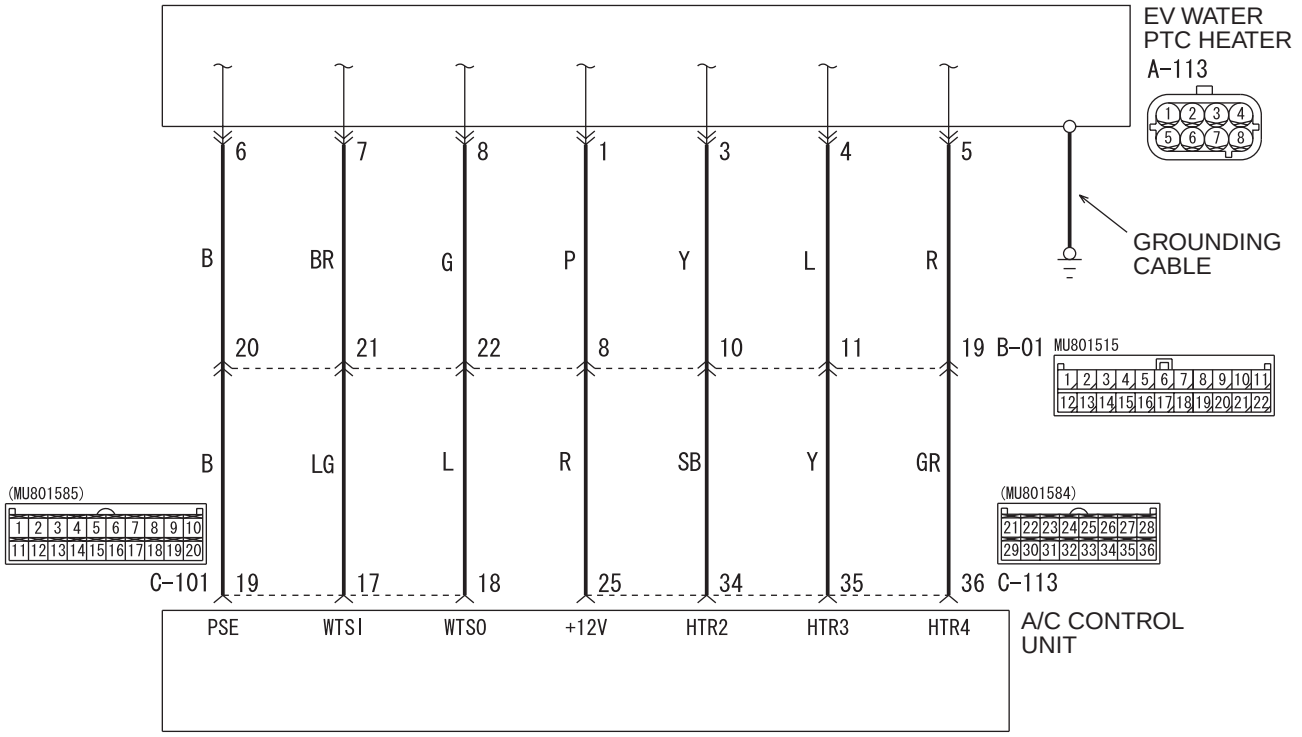

ACC00326
WDT55M008A

Heater water temperature sensor circuit

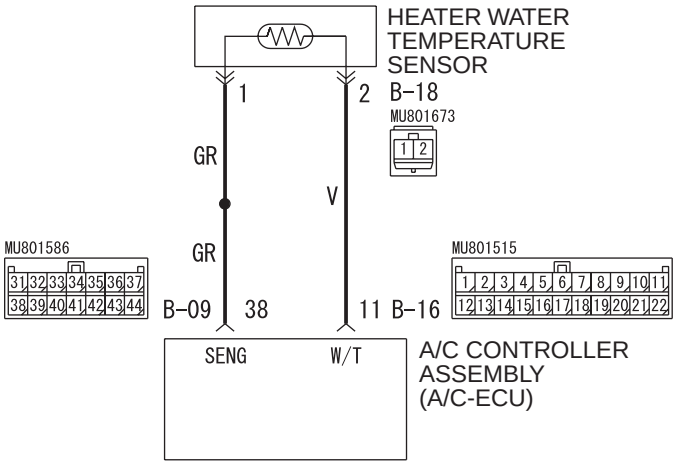

ACC00327
WDT55M001A

<Correct>

Connectors: A-109, 113 <LHD>

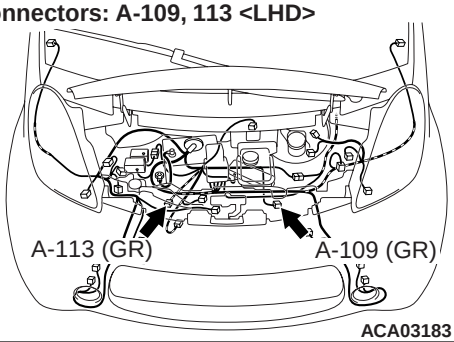

ACA03183 AO

Connectors: A-109, A-113 <RHD>

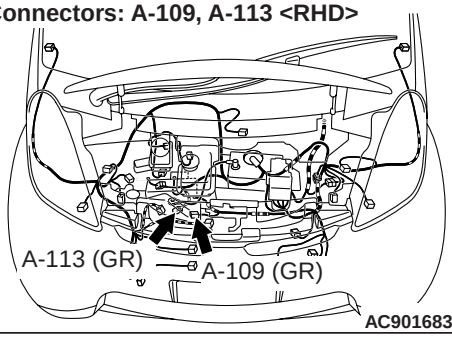

AC901683AX

Connectors: B-09, B-16, B-18 <LHD>

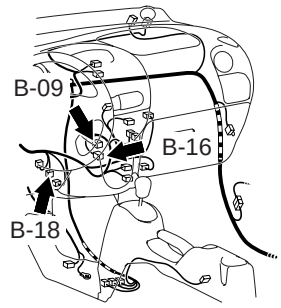

ACA03178 AK

Connectors: B-09, B-16, B-18, B-122 <RHD>

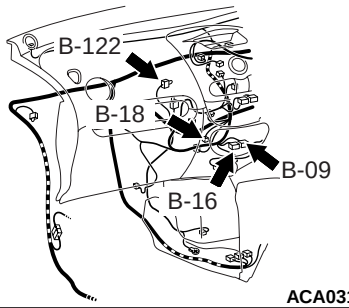

ACA03188 BJ

Connector: B-122 <LHD>

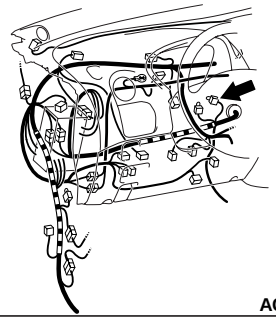

ACA03177 AV

Connector: C-101, C-115
Rear floor lower part

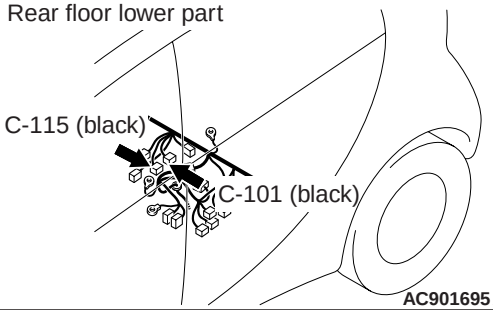

AC901695 AW

Diagnosis code set conditions
This code is set when one of the heater water temperatures at the inlet, outlet, or heater core reaches 100°C or more for 3 seconds or more.

PROBABLE CAUSES

- Insufficient volume of water heater fluid
- Malfunction of heater water pump assembly
- Malfunction of EV water PTC heater
- Damaged harness wires and connectors
- Malfunction of A/C control unit

DIAGNOSIS PROCEDURE

STEP 1. Check the water heater fluid volume.
Refer to .

Q: Is the water heater fluid volume correct?
YES : Go to Step 2.
NO : Check the water heater fluid level, and add if necessary.

STEP 2. Check the water heater fluid flow.
Drive the heater in READY status and visually check the flow of the water fluid volume in the heater condenser tank.

Q: Is the water heater fluid confirmed?
YES : Go to Step 8.
NO <No heater water pump assembly running noise can be heard> : Go to Step 3.
NO <A heater water pump assembly running noise can be heard, but the water heater fluid cannot be confirmed> : Replace the heater water pump assembly.

STEP 3. Connector check: A-109 heater water pump assembly connector

Q: Is the check result normal?
YES : Go to Step 4.
NO : Repair the damaged connector.

<Correct>

STEP 4. Measure the resistance at A-109 heater water pump assembly connector.
(1) Disconnect the connector, and measure at the wiring harness side.
(2) Resistance between terminal No. 2 and body earth

OK: Continuity exists (2 Ω or less).

Q: Is the check result normal?
YES : Go to Step 6.
NO : Go to Step 5.

STEP 5. Check the heater water pump assembly.
Refer to .

Q: Is the check result normal?
YES : Intermittent malfunction. (Refer to GROUP 00 – How to Use Troubleshooting/ Inspection Service Points, How to Cope with Intermittent Malfunctions .)
NO : Replace the heater water pump assembly.

STEP 6. Connector check: B-122 grounding connector

Q: Is the check result normal?
YES : Go to Step 7.
NO : Repair the damaged connector.

STEP 7. Check the wiring harness between A-109 heater water pump assembly connector terminal No. 2 and B-122 grounding connector terminal No. 5.
- Check the earth wires for open circuit.

Q: Is the check result normal?
YES : Intermittent malfunction. (Refer to GROUP 00 – How to Use Troubleshooting/ Inspection Service Points, How to Cope with Intermittent Malfunctions .)
NO : Repair the wiring harness.

STEP 8. M.U.T.-III data list
Check that the following service data display contents are normal.

Actuator test
- Item 1: ELC.water heater test mode

Data list
- Item 7: ELC.water heater test status

Q: Is the check result normal?
YES : Go to Step 13.
NO : Go to Step 9.

STEP 9. Connector check: A-113 EV water PTC heater connector

Q: Is the check result normal?
YES : Go to Step 10.
NO : Repair the damaged connector.

STEP 10. Check the heater outlet water temperature sensor/heater inlet water temperature sensor.
Refer to .

Q: Is the check result normal?
YES : Go to Step 11.
NO : Replace the heater.

STEP 11. Connector check: C-101 A/C control unit controller connector

Q: Is the check result normal?
YES : Go to Step 12.
NO : Repair the damaged connector.

STEP 12. Check the wiring harness between A-113 EV water PTC heater connector terminal No. 6, 7, 8 and C-101 A/C control unit connector terminal No. 19, 17, 18.
- Check the wiring harness for damage.

NOTE: Before checking the wiring harness, check the intermediate connector B-01 and repair it if necessary.

Q: Is the check result normal?
YES : Go to Step 20.
NO : Repair the wiring harness.

STEP 13. Heater controller (A/C-ECU) M.U.T.-III service data
Check that the following service data display contents are normal.
- Item 24: Engine coolant TEMP. sensor

Q: Is the check result normal?
YES : Go to Step 17.
NO : Go to Step 14.

STEP 14. Connector check: B-20 heater water temperature connector

Q: Is the check result normal?
YES : Go to Step 15.
NO : Repair the damaged connector.

<Correct>

STEP 15. Check the wiring harness between B-20 heater water temperature sensor connector terminal No. 1, 2 and B-115 heater controller (A/C-ECU) connector terminal No. 38 and B-116 heater controller (A/C-ECU) connector terminal No. 11.

- Check the wiring harness for damage.

Q: Is the check result normal?

YES : Go to Step 16.
NO : Repair the wiring harness.

STEP 16. Check the heater water temperature sensor.

Refer to .

Q: Is the check result normal?

YES : Intermittent malfunction. (Refer to GROUP 00 – How to Use Troubleshooting/ Inspection Service Points, How to Cope with Intermittent Malfunctions .)
NO : Replace the heater water temperature sensor.

STEP 17. Connector check: A-113 EV water PTC heater connector

Q: Is the check result normal?

YES : Go to Step 18.
NO : Repair the damaged connector.

STEP 18. Connector check: C-115 A/C control unit connector

Q: Is the check result normal?

YES : Go to Step 19.
NO : Repair the damaged connector.

STEP 19. Check the wiring harness between A-113 EV water PTC heater connector terminal No. 6, 7, 8, 1, 2, 3, 4, 5 and C-115 A/C control unit connector terminal No. 25, 33, 34, 35, 36.

- Check the heater drive circuit for short to earth.

NOTE: Before checking the wiring harness, check the intermediate connector B-01 and repair it if necessary.

Q: Is the check result normal?

YES : Go to Step 20.
NO : Repair the wiring harness.

STEP 20. Check whether the diagnosis code is reset.

Q: Is the diagnosis code set?

YES : Go to Step 21.
NO : Intermittent malfunction. (Refer to GROUP 00 – How to Use Troubleshooting/ Inspection Service Points, How to Cope with Intermittent Malfunctions .)

STEP 21. After replacing the A/C control unit check again if the diagnosis code is set.

Q: Is the diagnosis code set?

YES : Replace the heater.
NO : This diagnosis is complete.

<Correct>