SERVICE BULLETIN

MITSUBISHI MOTORS

GLOBAL AFTER SALES OFFICE, MITSUBISHI MOTORS CORPORATION

PURPOSE : INFORMATION	ISSUE NO. : MSB-12EX17-001	DATE : 2012-12-10
SUBJECT : CRUISE CONTROL SYSTEM OF 4J1 ENGINE		<Destination/Model> (EUR/RUSSIA/G.EXP) <M/Y> 12-13
GROUP : ENGINE EMISSION CONTROL		LANCER/LANCER EX(CY0A)/LANCER SPORTBACK(CX0A)

1. Description:

See the attached sheets for the information about the change of mention in the applicable service manual. (DIAGNOSIS CODE NO : 31,32,33,34)

2. Applicable manual:

See the attached sheets

3. Details:

See the attached sheets

For overseas market

<G.EXP/GCC>

Applicable manual	Pub. No.		Applicable title (INFO-ID)	Contents
2012 LANCER/ LANCER EX Workshop Manual	G.EXP/ GCC	PWME1111R (English) PWMS1112R (Spanish)	GENERAL INFORMATION [4J10] (M172-00-011-74500-01)	Attached sheet4 (1/6)～(3/6)

<EU/RUSSIA>

Applicable manual	Pub. No.		Applicable title (INFO-ID)	Contents
2012 LANCER/ LANCER SPORTBACK Workshop Manual	EU	CG1E12E1-CD (English) CG1S12E1-CD (Spanish) CG1F12E1-CD (French) CG1G12E1-CD (German) CG1I12E1-CD (Italian)	CHECK CHART FOR DIAGNOSIS CODES [4B1,4J1] (M172-00-221-32800-01)	Attached sheet4 (4/6)
			Code No. 23: Engine-ECU and Its Related Components [4B1,4J1] (M172-00-570-70500-01)	Attached sheet4 (5/6)～(6/6)
	RUSSIA	N/A		
2013 LANCER/ LANCER SPORTBACK Workshop Manual	EU	CG1E13E1-CD (English) CG1S13E1-CD (Spanish) CG1F13E1-CD (French) CG1G13E1-CD (German) CG1I13E1-CD (Italian)	CHECK CHART FOR DIAGNOSIS CODES [4B1,4J1] (M172-00-221-32800-01)	Attached sheet4 (4/6)
			Code No. 23: Engine-ECU and Its Related Components [4B1,4J1] (M172-00-570-70500-01)	Attached sheet4 (5/6)～(6/6)
	RUSSIA	N/A		

Attached sheet4 (1/6)

CRUISE CONTROL <4J10>

GENERAL INFORMATION

M1172000101745

OUTLINE OF CHANGE <4J10>

Addition of vehicles with the 4J10 engine. Service procedures are the same as vehicles with the conventional 4B1-N/A engine.

<Old>

<New>

Attached sheet4 (2/6)～(3/6)

<New>

Attached sheet4 (2/6)

CRUISE CONTROL <4J10>

GENERAL INFORMATION

M1172000101745

OUTLINE OF CHANGE

Due to the addition of vehicles with the 4J10 engine, service procedures have been established. Other service procedures are the same as vehicles with the conventional 4B1-N/A engine.

CHECK CHART FOR DIAGNOSIS CODES

M1172002201908

Code No.	Diagnosis item	Reference page
31	Torque control fail (air flow sensor)	
32	Torque control fail (manifold absolute pressure sensor)	
33	Torque control fail (barometric pressure sensor)	
34	Torque control fail (engine coolant temperature sensor)	

DIAGNOSIS CODE PROCEDURES

CODE NO. 31: Torque Control Fail (Air Flow Sensor)
CODE NO. 32: Torque Control Fail (Manifold Absolute Pressure Sensor)
CODE NO. 33: Torque Control Fail (Barometric Pressure Sensor)
CODE NO. 34: Torque Control Fail (Engine Coolant Temperature Sensor)

DIAGNOSIS CODE SET CONDITIONS

This diagnosis code will be set when the engine-ECU determines that is defective according to the following conditions.

Code No. 31

- The air flow sensor output voltage is abnormal.
- The difference between the volumetric efficiency (actual value) which is based on the air flow sensor value and that which is based on the throttle position sensor exceeds a predetermined value.

NOTE: This diagnosis code may be set before the engine-ECU determines that the air flow sensor system is defective.

Code No. 32

- The manifold absolute pressure sensor output voltage is abnormal.

NOTE: This diagnosis code may be set before the engine-ECU determines that the manifold absolute pressure sensor system is defective.

Code No. 33

- The barometric pressure sensor output voltage is abnormal.

NOTE: This diagnosis code may be set before the engine-ECU determines that the barometric pressure sensor system is defective.

Code No. 34

- The engine coolant temperature sensor output voltage is abnormal.

NOTE: This diagnosis code may be set before the engine-ECU determines that the engine coolant temperature sensor system is defective.

PROBABLE CAUSES

- Failed air flow sensor <Code No. 31>
- Failed manifold absolute pressure sensor <Code No. 32>
- Failed barometric pressure sensor <Code No. 33>
- Failed engine coolant temperature sensor <Code No. 34>
- Open/short circuit or harness damage in air flow sensor circuit or loose connector contact.
- Malfunction of the engine-ECU.

DIAGNOSIS PROCEDURE

STEP 1. Check the MPI system diagnosis code.

Using M.U.T.-III, perform MPI system diagnosis code (Refer to GROUP 13D – Troubleshooting, Diagnosis Function).

Q: Is any diagnosis code set?

YES : Repair the MPI system (Refer to GROUP 13D – Troubleshooting, Inspection Chart for Diagnosis Code). Then go to Step 3.
NO : Go to Step 2

STEP 2. Read the diagnosis code.
(1) Use the M.U.T.-III, erase the diagnosis code of the cruise control system.
(2) Turn the ignition switch to the "ON" position, and press the cruise control ON/OFF switch to turn the cruise control system to ON (the cruise control indicator lamp is turned on).
(3) After turning the cruise control system to ON, when 2 minutes or more has elapsed without operating the cruise control switches, read the diagnosis code of the cruise control system (Refer to).

Q: Is diagnosis code No. 31, 32, 33 or 34 set?
YES : Replace the engine-ECU (Refer to GROUP 13D – Engine-ECU). Then go to Step 3.
NO : It can be assumed that this malfunction is intermittent (Refer to GROUP 00 – How to Use Troubleshooting/Inspection Service Points, How to Cope with Intermittent Malfunction).

STEP 3. Read the diagnosis code.
(1) Use the M.U.T.-III, erase the diagnosis code of the cruise control system.
(2) Turn the ignition switch to the "ON" position, and press the cruise control ON/OFF switch to turn the cruise control system to ON (the cruise control indicator lamp is turned on).
(3) After turning the cruise control system to ON, when 2 minutes or more has elapsed without operating the cruise control switches, read the diagnosis code of the cruise control system (Refer to).

Q: Is diagnosis code No. 31, 32, 33 or 34 set?
YES : Return to Step 1.
NO : This procedure is complete.

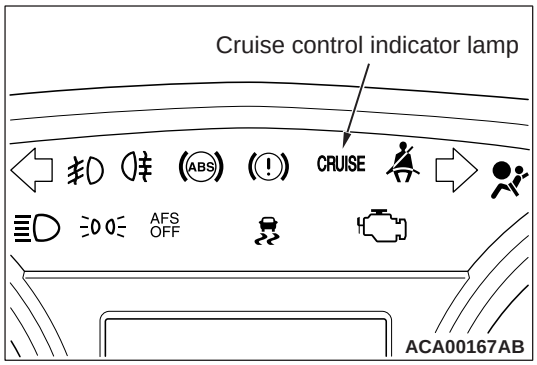

2. Read a diagnosis code by observing the flash display pattern of the cruise control indicator lamp within the combination meter.

Diagnosis result display method when using the cruise control indicator lamp

When diagnosis code number 23 is set	When no diagnosis code is set
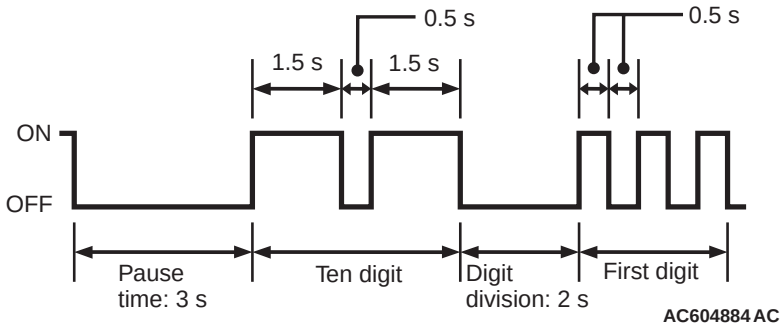	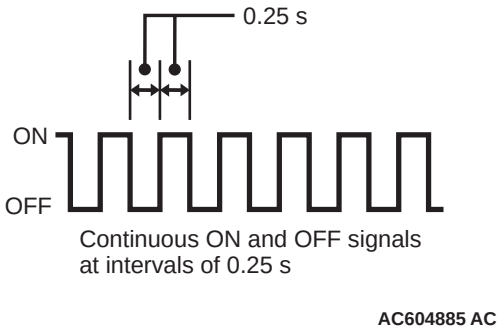

NOTE: Other on-board diagnosis items are also output as voltage waveforms corresponding to diagnosis code numbers.

METHOD OF ERASING THE DIAGNOSIS CODE

Disconnect the negative battery terminal.

CHECK CHART FOR DIAGNOSIS CODES

M1172002201328

Code No.	Diagnosis item	Reference page
15	Cruise control switch system	
22	Stop lamp switch system	
23	Engine-ECU and its related components	
31	Torque control fail (air flow sensor) <4J1>	
32	Torque control fail (manifold absolute pressure sensor) <4J1>	
33	Torque control fail (barometric pressure sensor) <4J1>	
34	Torque control fail (engine coolant temperature sensor) <4J1>	

<Added>

YES : Replace the engine-ECU (Refer to GROUP 13B – Engine-ECU) <4B1> or (Refer to GROUP 13F – Engine-ECU) <4J1>. Then go to Step 3.
NO : It can be assumed that this malfunction is intermittent (Refer to GROUP 00 – How to Use Troubleshooting/Inspection Service Points, How to Cope with Intermittent Malfunction).

STEP 3. Read the diagnosis code.
(1) Disconnect the negative battery terminal, and erase the diagnosis code of the cruise control system.
(2) Connect the negative battery terminal.
(3) Turn the ignition switch to the "ON" position, and press the "ON/OFF" switch to turn the cruise control system to ON (turn ON the cruise control indicator lamp).
(4) After turning the cruise control system to ON, when 2 minutes or more has elapsed without operating the cruise control switches, read the diagnosis code of the cruise control system (Refer to).

Q: Is diagnosis code No.23 set?
YES : Return to Step 1.
NO : This procedure is complete.

<Added>

CODE NO. 31: Torque Control Fail (Air Flow Sensor) <4J1>
CODE NO. 32: Torque Control Fail (Manifold Absolute Pressure Sensor) <4J1>
CODE NO. 33: Torque Control Fail (Barometric Pressure Sensor) <4J1>
CODE NO. 34: Torque Control Fail (Engine Coolant Temperature Sensor) <4J1>

DIAGNOSIS CODE SET CONDITIONS
This diagnosis code will be set when the engine-ECU determines that is defective according to the following conditions.

Code No. 31
- The air flow sensor output voltage is abnormal.
- The difference between the volumetric efficiency (actual value) which is based on the air flow sensor value and that which is based on the throttle position sensor exceeds a predetermined value.

NOTE: This diagnosis code may be set before the engine-ECU determines that the air flow sensor system is defective.

Code No. 32
- The manifold absolute pressure sensor output voltage is abnormal.

NOTE: This diagnosis code may be set before the engine-ECU determines that the manifold absolute pressure sensor system is defective.

Code No. 33
- The barometric pressure sensor output voltage is abnormal.

NOTE: This diagnosis code may be set before the engine-ECU determines that the barometric pressure sensor system is defective.

Code No. 34
- The engine coolant temperature sensor output voltage is abnormal.

NOTE: This diagnosis code may be set before the engine-ECU determines that the engine coolant temperature sensor system is defective.

PROBABLE CAUSES
- Failed air flow sensor <Code No. 31>
- Failed manifold absolute pressure sensor <Code No. 32>
- Failed barometric pressure sensor <Code No. 33>
- Failed engine coolant temperature sensor <Code No. 34>
- Open/short circuit or harness damage in air flow sensor circuit or loose connector contact.
- Malfunction of the engine-ECU.

DIAGNOSIS PROCEDURE

STEP 1. Check the MPI system diagnosis code.
Using M.U.T.-III, perform MPI system diagnosis code (Refer to GROUP 13F – Troubleshooting, Diagnosis Function).

Q: Is any diagnosis code set?
YES : Repair the MPI system (Refer to GROUP 13F – Troubleshooting, Inspection Chart for Diagnosis Code). Then go to Step 3.
NO : Go to Step 2

STEP 2. Read the diagnosis code.
(1) Use the M.U.T.-III, erase the diagnosis code of the cruise control system.

(2) Turn the ignition switch to the "ON" position, and press the cruise control ON/OFF switch to turn the cruise control system to ON (the cruise control indicator lamp is turned on).
(3) After turning the cruise control system to ON, when 2 minutes or more has elapsed without operating the cruise control switches, read the diagnosis code of the cruise control system (Refer to).

Q: Is diagnosis code No. 31, 32, 33 or 34 set?
YES : Replace the engine-ECU (Refer to GROUP 13F – Engine-ECU). Then go to Step 3.
NO : It can be assumed that this malfunction is intermittent (Refer to GROUP 00 – How to Use Troubleshooting/Inspection Service Points, How to Cope with Intermittent Malfunction).

STEP 3. Read the diagnosis code.
(1) Use the M.U.T.-III, erase the diagnosis code of the cruise control system.
(2) Turn the ignition switch to the "ON" position, and press the cruise control ON/OFF switch to turn the cruise control system to ON (the cruise control indicator lamp is turned on).
(3) After turning the cruise control system to ON, when 2 minutes or more has elapsed without operating the cruise control switches, read the diagnosis code of the cruise control system (Refer to).

Q: Is diagnosis code No. 31, 32, 33 or 34 set?
YES : Return to Step 1.
NO : This procedure is complete.

CHECK CHART FOR TROUBLE SYMPTOMS

M1172002302168

Trouble symptom		Inspection procedure No.	Reference page
Communication with M.U.T.-III is not possible.	Communication with the engine-ECU only is impossible	–	GROUP 13B – Troubleshooting, Symptom Procedures, Inspection Procedure 1 <4B1>.
			GROUP 13F – Troubleshooting, Symptom Procedures, Inspection Procedure 1 <4J1>.
When the brake pedal is depressed, cruise control is not cancelled.		1	
When the clutch pedal is depressed, cruise control is not cancelled <M/T>.		2	
When the selector lever is set to "N" position, cruise control is not cancelled <CVT>.		3	
When the "CANCEL" switch is pushed, cruise control is not cancelled.		4	
Cruise control cannot be set (No response when the "COAST/SET" switch and the "ACC/RES" switch is pushed).		5	