MITSUBISHI MOTORS

SERVICE BULLETIN

GLOBAL AFTER SALES OFFICE, MITSUBISHI MOTORS CORPORATION

PURPOSE : CORRECTION	ISSUE NO. : MSB-12EXM35-501	DATE : 2012-11-20
SUBJECT : REPLACING REAR BRAKE PADS		<Destination/Model> <M/Y> Destination(as per attached) 13 Model:GA0W/GF0W
GROUP : BASIC BRAKE		

1. Description:

See the attached sheets for the correction of the error existing in the applicable service manual.

2. Applicable Manual :

See the attached sheets

3. Details:

See the attached sheets

For overseas market

<EU/RUSSIA>

Applicable manual	Pub. No.		Applicable title (INFO-ID)	Contents
2013 ASX WORKSHOP MANUAL	EU	CGWE13E4-CD (ENGLISH) CGWS13E4-CD (SPANISH) CGWF13E4-CD (FRENCH) CGWG13E4-CD (GERMAN) CGWI13E4-CD (ITALIAN)	BRAKE PAD REPLACEMENT M351-01-740-95900-01	Attached sheet 3 (1/3, 3/3)
	RUSSIA	N/A		
2013 OUTLANDER WORKSHOP MANUAL	EU	CGFE13E1-CD (ENGLISH) CGFS13E1-CD (SPANISH) CGFF13E1-CD (FRENCH) CGFG13E1-CD (GERMAN) CGFI13E1-CD (ITALIAN)	BRAKE PAD REPLACEMENT M351-01-740-92600-01	
	RUSSIA	N/A		

<G.EXP/GCC>

Applicable manual	Pub. No.		Applicable title (INFO-ID)	Contents
2013 ASX WORKSHOP MANUAL	G.EXP/ GCC	PWPE1204R	BRAKE PAD REPLACEMENT M351-01-740-94800-01	Attached sheet 3 (1/3, 3/3)
	BRAZIL	DRAFT		
	NZ	DRAFT		

<MMNA>

Applicable manual	Pub. No.		Applicable title (INFO-ID)	Contents
2013 ASX/OUTLANDER SPORT SERVICE MANUAL	MMNA	MSCD-017B-2013	BRAKE PAD REPLACEMENT M351-01-740-29400-01	Attached sheet 3 (2/3, 3/3)

<old>

Attached sheet 3 (1/3)

<REAR>

⚠ CAUTION

When replacing, replace both brake pads (right and left) as a set.

1. Remove the parking brake rear cable mounting bolts and nut (at the cable clamp) to loosen the cable. (Refer to GROUP 36 – Parking Brake).

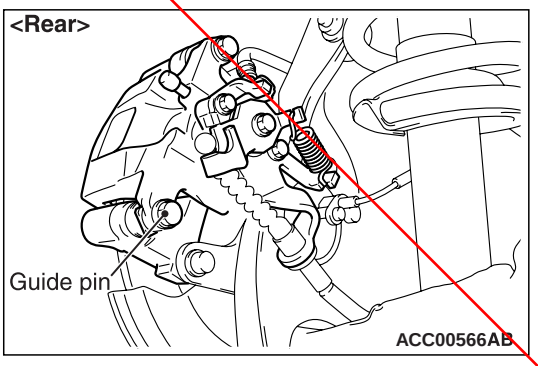

2. Remove the parts indicated in the figure, swivel the caliper body upward and retain it with a wire or similar tool.

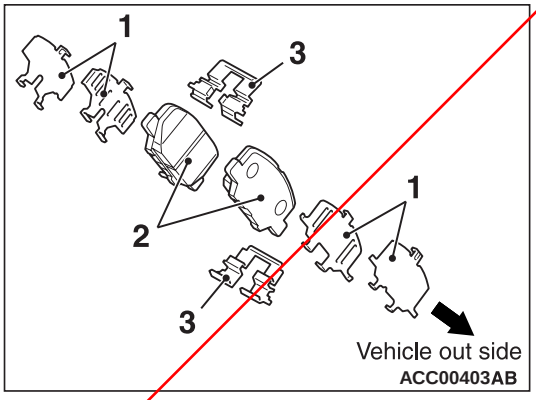

3. Remove the following parts from the caliper support.
   (1) Shim
   (2) Brake pad assembly (brake pad and wear indicator assembly)
   (3) Clip

⚠ CAUTION

Keep grease or other soiling off the pad and brake disc friction surfaces.

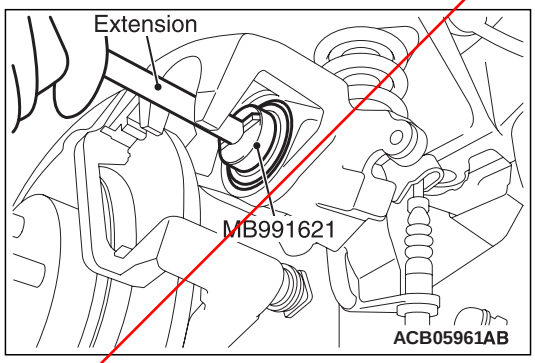

4. Clean the piston part, and press the piston into the cylinder using the special tool piston expander (MB991621).

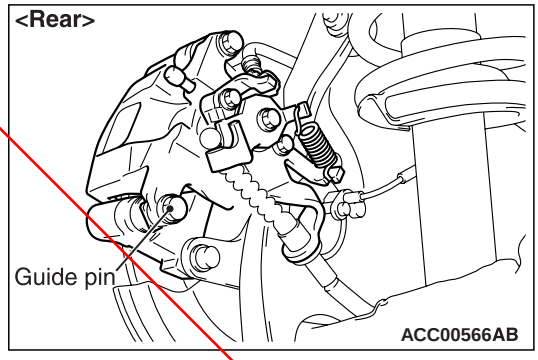

5. Assemble the brake pad assembly to the caliper support, and tighten the guide pin to the specified torque.

   Tightening torque: 35 ± 4 N·m

   NOTE: Install the brake pad assembly (with wear indicator) to the inner side of the brake disc, making sure that the wear indicator is located on the bottom.

6. Connect the parking brake rear cable.(Refer to GROUP 36 – Parking Brake).

Replace with attached sheet 3 (3/3)

<New>

<Old>

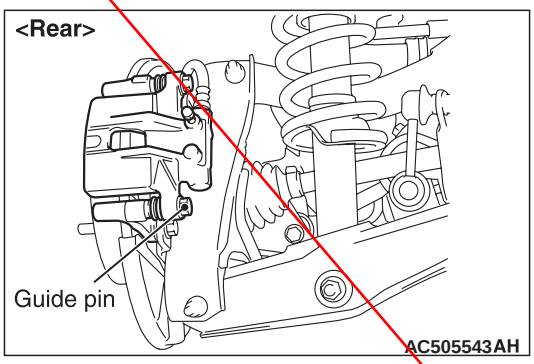

<REAR>

⚠ CAUTION

When replacing, replace both brake pads (right and left) as a set.

1. Remove the parts indicated in the figure, swivel the caliper body upward and retain it with a wire or similar tool.

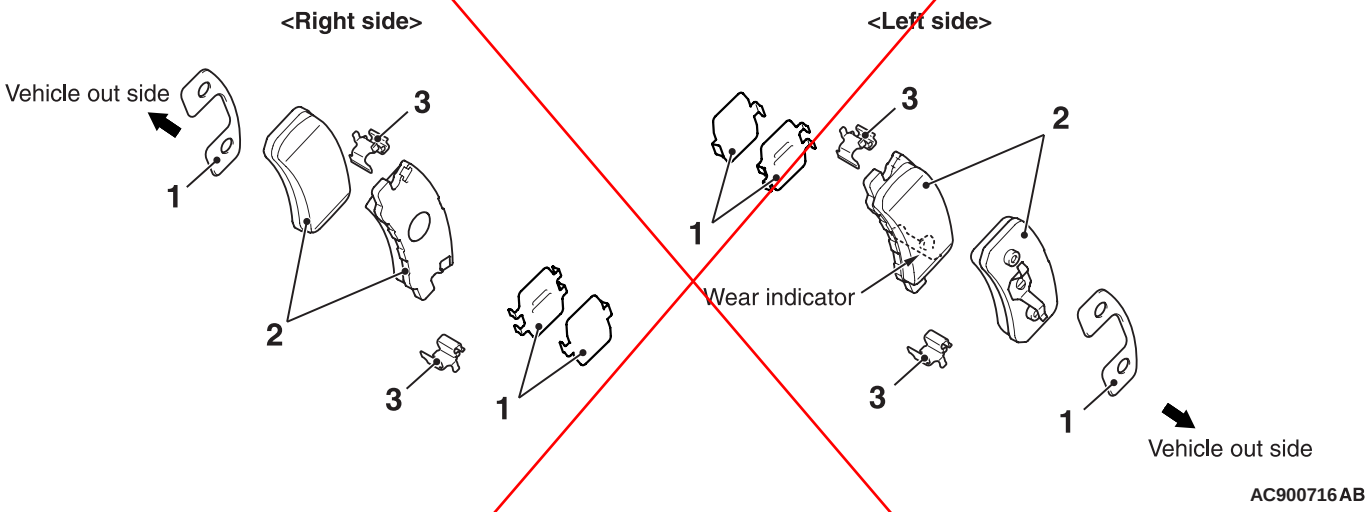

2. Remove the following parts from the caliper body.
   (1) Shim
   (2) Brake pad assembly
   (3) Clip

⚠ CAUTION

Keep grease or other soiling off the pad and brake disk friction surfaces.

3. Clean the piston part, and press the piston into the cylinder using the special tool piston expander (MB990520).
4. Assemble the shim, brake pad assembly and clip to the caliper support, and tighten the guide pin to the specified torque.

   Tightening torque: 44 ± 5 N·m (32 ± 4 ft-lb)

   NOTE: Install the brake pad assembly (with wear indicator) to the inner side of the brake disk, making sure that the wear indicator is located on the bottom.

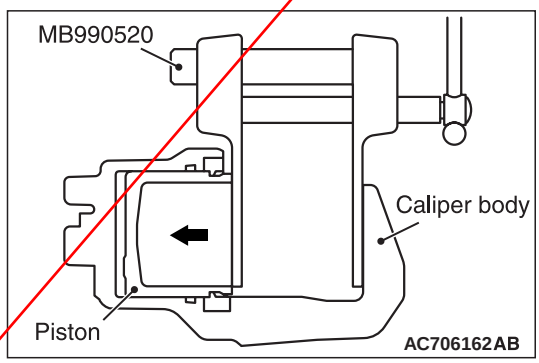

Replace with attached sheet 3 (3/3)

<New>

<New>

<REAR>

⚠ CAUTION
When replacing, replace both brake pads (right and left) as a set.

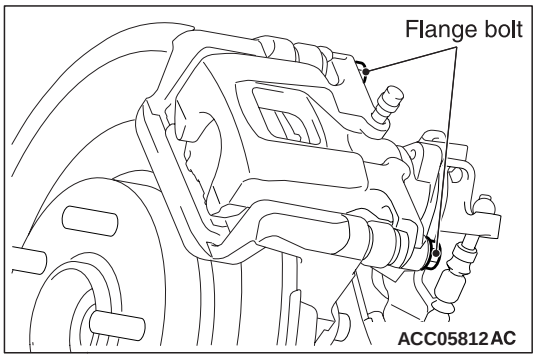

1. Remove the two flange bolts to loosen the caliper body.

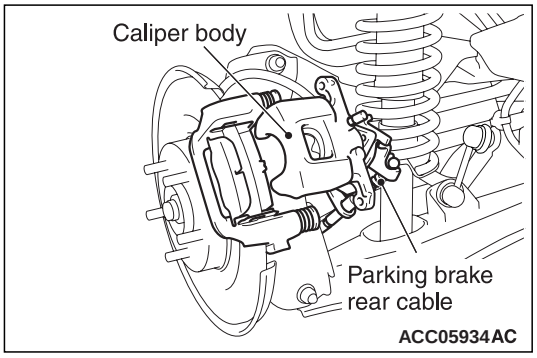

2. Lift the caliper body and the parking brake rear cable to put them aside.

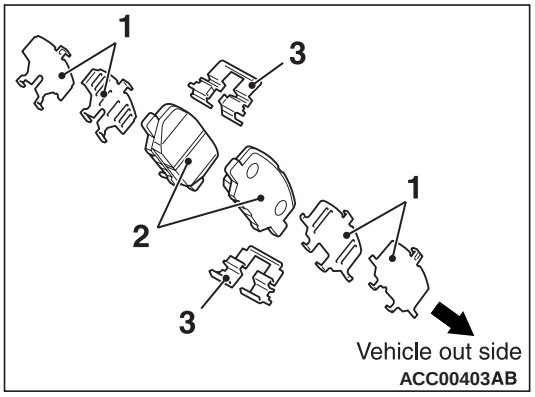

3. Remove the following parts from the caliper support.
   (1) Shim
   (2) Brake pad assembly (brake pad and wear indicator assembly)
   (3) Clip

⚠ CAUTION
Keep grease or other soiling off the pad and brake disc friction surfaces.

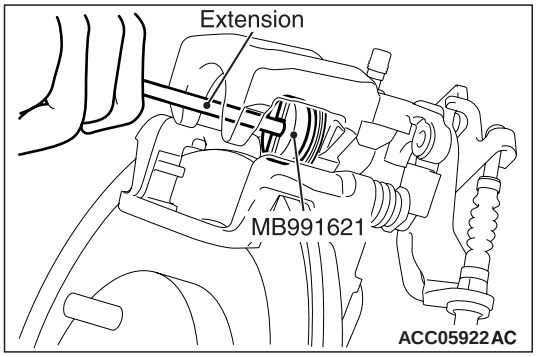

4. Clean the piston part, and press the piston into the cylinder using the special tool piston expander (MB991621).

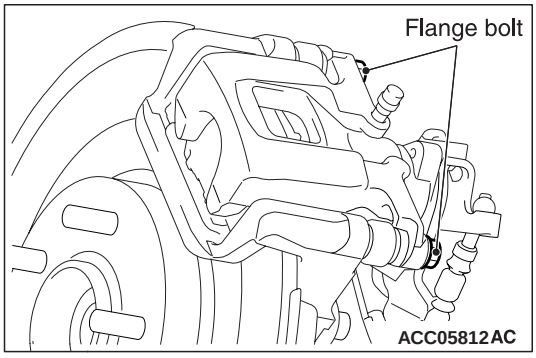

5. Assemble the shim, brake pad assembly and clip to the caliper support, and tighten the two bolts to the specified torque as shown.
   Tightening torque: 35 ± 4 N·m
   NOTE: Observe the followings when you install the brake pad assembly:

   - *Mount the brake pad with the wear indicator to the inside of the vehicle.*
   - *Projection behind the brake pad assembly should be seated in the groove of the piston.*