SERVICE BULLETIN

MITSUBISHI MOTORS

GLOBAL AFTER SALES OFFICE. MITSUBISHI MOTORS CORPORATION

PURPOSE : CORRECTION	ISSUE NO. : MSB-12EXML23-501	DATE : 2012-08-28
SUBJECT : REMOVAL AND INSTALLATION OF A/T FLUID COOLER		<Destination/Model> (AS SHOWN BELOW) <M/Y> 10-12
GROUP : A/T		OUTLANDER(CW0W)

1. Description:

See the attached sheets for the correction of the error existing in the applicable service manual.

2. Applicable Manual :

See the attached sheets

3. Details:

See the attached sheets

Destination : MMNA/USTP/EUR/RUSSIA/G.EXP/GCC/NZ/MMAL

Attached sheet 1

MMNA

Applicable manual	Pub. No.	Applicable title (INFO ID)	Contents
2010 OUTLANDER Service Manual	MSCD-007B-2010	Gr23C: A/T FLUID COOLER LINE REMOVAL AND INSTALLATION M231-03-680-11700-01	Attached sheet 2
2011 OUTLANDER Service Manual	MSCD-007B-2011	Gr23C: A/T FLUID COOLER LINE REMOVAL AND INSTALLATION M231-03-680-11700-01	Attached sheet 2
2012 OUTLANDER Service Manual	MSCD-007B-2012	Gr23C: A/T FLUID COOLER LINE REMOVAL AND INSTALLATION M231-03-680-11700-01	Attached sheet 2

EU/RUSSIA

Applicable manual	Pub. No.	Applicable title (INFO ID)	Contents
2010 OUTLANDER Workshop Manual ＜EU＞	CGXE10E1-CD (English) CGXS10E1-CD (Spanish) CGXF10E1-CD (French) CGXG10E1-CD (German) CGXI10E1-CD (Italian)	Gr23C: A/T FLUID COOLER LINE REMOVAL AND INSTALLATION M231-03-680-12800-01	Attached sheet 3
＜RUSSIA＞	N/A		
2011 OUTLANDER Workshop Manual ＜EU＞	CGXE11E1-CD (English) CGXS11E1-CD (Spanish) CGXF11E1-CD (French) CGXG11E1-CD (German) CGXI11E1-CD (Italian)	Gr23C: A/T FLUID COOLER LINE REMOVAL AND INSTALLATION M231-03-680-12800-01	Attached sheet 3
＜RUSSIA＞	N/A		
2012 OUTLANDER Workshop Manual ＜EU>	CGXE12E1-CD (English) CGXS12E1-CD (Spanish) CGXF12E1-CD (French) CGXG12E1-CD (German) CGXI12E1-CD (Italian)	Gr23C: A/T FLUID COOLER LINE REMOVAL AND INSTALLATION M231-03-680-12800-01	Attached sheet 3
＜RUSSIA＞	N/A		

G.EXP/GCC/MMAL/NZ/SOUTH AFRICA/ARGENTINA/BRAZIL/TAIWAN/CHINA

Applicable manual	Pub. No.	Applicable title (INFO ID)	Contents
2010 OUTLANDER Workshop Manual ＜EXP/GCC＞	PWRE0906R (English) PWRS0907R (Spanish)	Gr23C: A/T FLUID COOLER LINE REMOVAL AND INSTALLATION M231-03-680-14000-01	Attached sheet 4
＜MMAL＞	MSCD-007B-2010		
＜NZ/CHINA/ BRAZIL/TAIWAN＞	DRAFT		
＜SOUTH AFRICA/ ARGENTINA＞	DRAFT		

Attached sheet 2

A/T FLUID COOLER LINE

REMOVAL AND INSTALLATION

M1231036800117

Pre-removal and post-installation operation

- Engine room under cover front, engine room side cover (Refer to GROUP 51 – Under Cover .)
- ~~Front bumper extension A, B, transmission fluid cooler duct~~ (Refer to GROUP 51 – Front Bumper Assembly .)
- Engine coolant draining and refilling (Refer to GROUP 14 – On-vehicle Service – Engine Coolant Replacement .)
- Transmission fluid draining and refilling (Refer to .)

<Incorrect>

<Correct>
Oil cooler duct

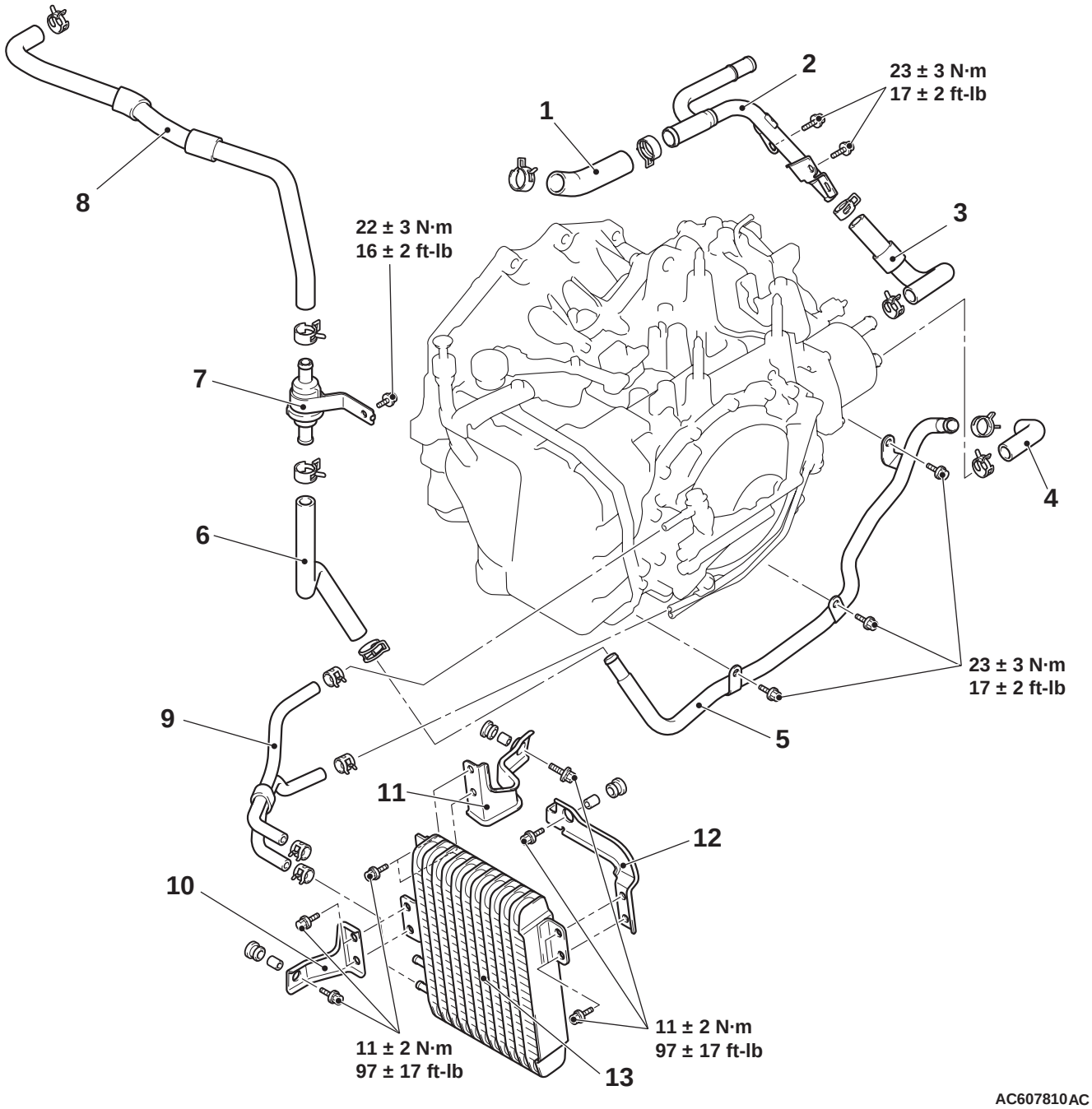

AC607810AC

Removal steps

1. Water return hose A
2. Water return tube
3. Water return hose B

Removal steps (Continued)

4. Water feed hose A
5. Water feed tube
6. Water feed hose B

Attached sheet 3

A/T FLUID COOLER LINE

REMOVAL AND INSTALLATION

M1231036800128

Pre-removal and post-installation operation

- Engine room under cover front A, engine room side cover (Refer to GROUP 51 – Under Cover .) <Incorrect>
- ~~Front bumper extension A, B, A/T fluid cooler duct~~ (Refer to GROUP 51 – Front bumper assembly .)
- Engine coolant draining and refilling (Refer to GROUP 14 – On-vehicle Service – Engine Coolant Replacement .)
- A/T fluid draining and refilling (Refer to .)

<Correct>
Oil cooler duct

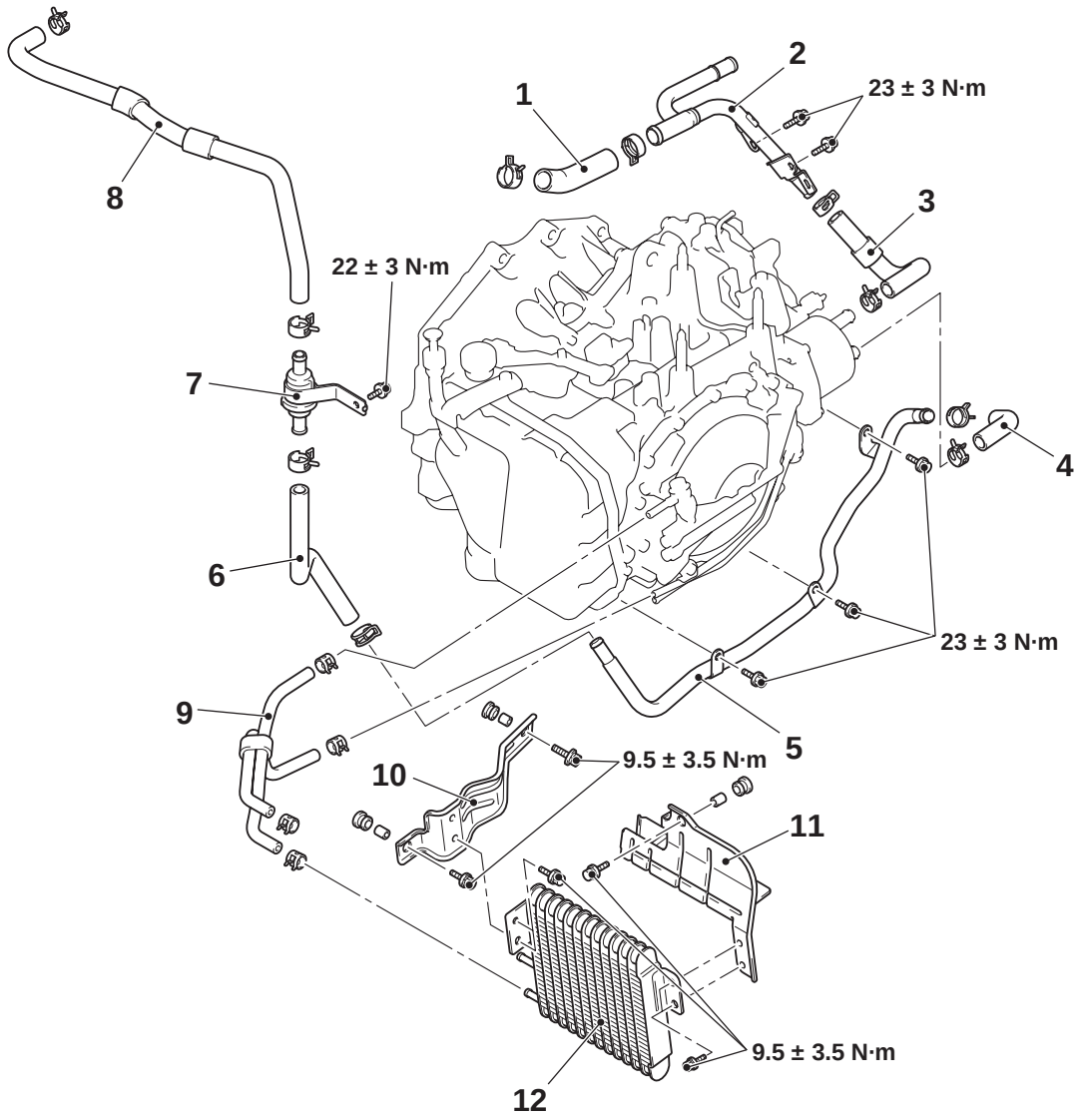

AC704773AB

Removal steps

1. Water return hose A
2. Water return tube
3. Water return hose B
4. Water feed hose A
5. Water feed tube
6. Water feed hose B

Removal steps (Continued)

7. Thermo valve assembly
8. Water feed hose C
9. A/T fluid cooler hose assembly
10. A/T fluid cooler bracket A
11. A/T fluid cooler bracket B
12. A/T fluid cooler assembly

Attached sheet 4

A/T FLUID COOLER LINE

REMOVAL AND INSTALLATION

M1231036800140

Pre-removal and post-installation operation

- Engine room under cover front, engine room side cover (Refer to GROUP 51 – Under Cover .) <Incorrect>
- ~~Front bumper extension A, B, A/T fluid cooler duct~~ (Refer to GROUP 51 – Front bumper assembly .)
- Engine coolant draining and refilling (Refer to GROUP 14 – On-vehicle Service – Engine Coolant Replacement .)
- A/T fluid draining and refilling (Refer to .)

<Correct>
Oil cooler duct

<Vehicles for Australia and New Zealand, Argentina>

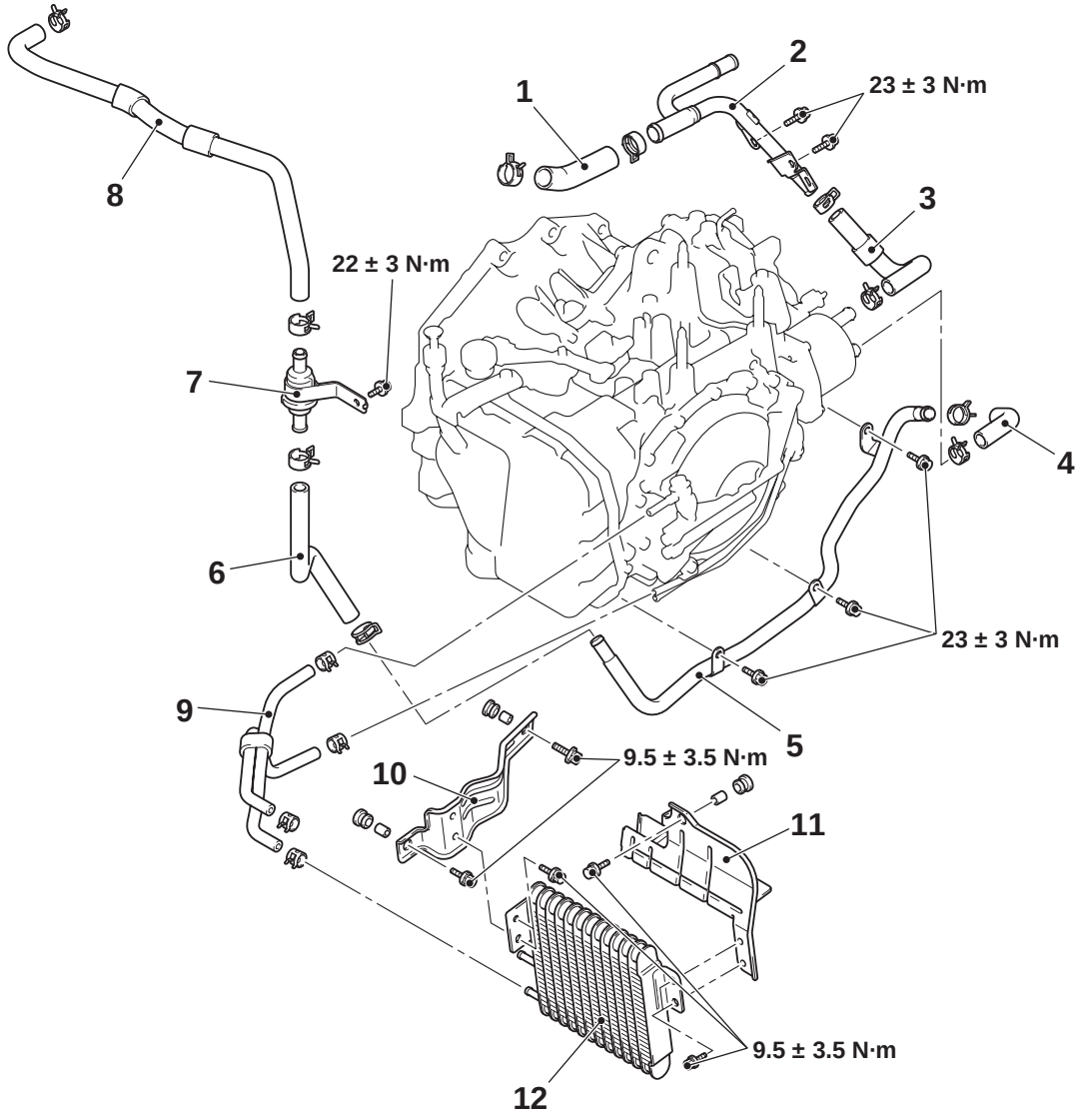

AC704773AB

Removal steps

1. Water return hose A
2. Water return tube
3. Water return hose B
4. Water feed hose A

Removal steps (Continued)

5. Water feed tube
6. Water feed hose B
7. Thermo valve assembly
8. Water feed hose C