SERVICE BULLETIN

MITSUBISHI MOTORS

GLOBAL AFTER SALES OFFICE. MITSUBISHI MOTORS CORPORATION

PURPOSE : INFORMATION	ISSUE NO. : MSB-12EXML37-001B	DATE : 2012-07-18	
SUBJECT : EPS-ECU CONNECTOR		<Destination/Model> (as show below) CY0A/CX0A/GA0W	<M/Y> 08-12
GROUP : STEERING			

1. Description:

See the attached sheets for the information about the change of mention in the current service manual..

2. Applicable manual:

See the attached sheets

3. Details:

See the attached sheets

※ The related destinations
G.EXP/GCC/EUR/RUSSIA/MMNA/CANADA/SOUTH AFRICA/NEW ZEALAND/CHINA/ ARGENTINA/HONG KONG/MMAL

EXCEPT JAPAN

LANCER/LANCER EX

<G.EXP/GCC/CHINA/ARGENTINA/SOUTH AFRICA/HONG KONG>

Applicable manual	Pub. No.	Applicable title (INFO-ID)	Contents
2008 LANCER/LANCER EX Workshop Manual (G.EXP/GCC/CHINA/ ARGENTINA/ SOUTH AFRICA)	PWME0701R(English) PWMS0702R(Spanish) CHINA:DRAFT ARGENTINA:DRAFT SOUTH AFRICA:DRAFT	POWER STEERING GEAR BOX AND LINKAGE REMOVAL AND INSTALLATION (M372-01-091-07000-01)	Attached sheet 5
		ELECTRIC POWER STEERING CONTROL UNIT (EPS-ECU) REMOVAL AND INSTALLATION (M372-00-630-09400-01)	Attached sheet 6
2009 LANCER/LANCER EX Workshop Manual (G.EXP/GCC/CHINA/ ARGENTINA/ SOUTH AFRICA)	PWME0802R(English) PWMS0803R(Spanish) CHINA:DRAFT ARGENTINA:DRAFT SOUTH AFRICA:DRAFT	POWER STEERING GEAR BOX AND LINKAGE REMOVAL AND INSTALLATION (M372-01-091-40102-01)	Attached sheet 7
		ELECTRIC POWER STEERING CONTROL UNIT (EPS-ECU) REMOVAL AND INSTALLATION (M372-00-630-13500-01)	Attached sheet 8
2010 LANCER/LANCER EX Workshop Manual (G.EXP/GCC/CHINA/ ARGENTINA/ SOUTH AFRICA/ HONG KONG)	PWME0901R(English) PWMS0902R(Spanish) CHINA:DRAFT ARGENTINA:DRAFT SOUTH AFRICA:DRAFT	POWER STEERING GEAR BOX AND LINKAGE REMOVAL AND INSTALLATION (M372-01-091-40102-01)	Attached sheet 7
		ELECTRIC POWER STEERING CONTROL UNIT (EPS-ECU) REMOVAL AND INSTALLATION (M372-00-630-13500-01)	Attached sheet 8

<EU/RUSSIA>

Applicable manual	Pub. No.	Applicable title (INFO-ID)	Contents
2008 LANCER Workshop Manual (EU)	CG1E08E1-CD(English) CG1S08E1-CD(Spanish) CG1F08E1-CD(French) CG1G08E1-CD(German) RUSSIA:N/A	POWER STEERING GEAR BOX AND LINKAGE REMOVAL AND INSTALLATION (M372-01-091-16600-01) B	Attached sheet 9
		ELECTRIC POWER STEERING CONTROL UNIT (EPS-ECU) REMOVAL AND INSTALLATION (M372-00-630-10200-01)	Attached sheet 10
2008 LANCER Workshop Manual (EU/RUSSIA)	CG1E08E2-CD(English) CG1S08E2-CD(Spanish) CG1F08E2-CD(French) CG1G08E2-CD(German) RUSSIA:N/A	POWER STEERING GEAR BOX AND LINKAGE REMOVAL AND INSTALLATION (M372-01-091-40100-01) B	Attached sheet 6
		ELECTRIC POWER STEERING CONTROL UNIT (EPS-ECU) REMOVAL AND INSTALLATION (M372-00-630-13500-01)	Attached sheet 8
2009 LANCER Workshop Manual (EU/RUSSIA)	CG1E09E1-CD(English) CG1S09E1-CD(Spanish) CG1F09E1-CD(French) CG1G09E1-CD(German) CG1I09E1-CD(Italy) RUSSIA:N/A	POWER STEERING GEAR BOX AND LINKAGE REMOVAL AND INSTALLATION (M372-01-091-68300-01)	Attached sheet 11
		ELECTRIC POWER STEERING CONTROL UNIT (EPS-ECU) REMOVAL AND INSTALLATION (M372-00-630-13500-01)	Attached sheet 8
2010 LANCER Workshop Manual (EU/RUSSIA)	CG1E10E1-CD(English) CG1S10E1-CD(Spanish) CG1F10E1-CD(French) CG1G10E1-CD(German) CG1I10E1-CD(Italy) RUSSIA:N/A	POWER STEERING GEAR BOX AND LINKAGE REMOVAL AND INSTALLATION (M372-01-091-94000-01)	Attached sheet 12
		ELECTRIC POWER STEERING CONTROL UNIT (EPS-ECU) REMOVAL AND INSTALLATION (M372-00-630-13500-01)	Attached sheet 8

LANCER SPORTBACK

<EU/RUSSIA>

Applicable manual	Pub. No.	Applicable title (INFO-ID)	Contents
2009 LANCER SPORTBACK Workshop Manual	CG4E09E1-CD(English) CG4S09E1-CD(Spanish) CG4F09E1-CD(French) CG4G09E1-CD(German) CG4I09E1-CD(Italy) RUSSIA:N/A	POWER STEERING GEAR BOX AND LINKAGE REMOVAL AND INSTALLATION (M372-01-091-61600-01) B	Attached sheet 13
		ELECTRIC POWER STEERING CONTROL UNIT (EPS-ECU) REMOVAL AND INSTALLATION (M372-00-630-13500-01)	Attached sheet 8
2010 LANCER SPORTBACK Workshop Manual	CG4E10E1-CD(English) CG4S10E1-CD(Spanish) CG4F10E1-CD(French) CG4G10E1-CD(German) CG4I10E1-CD(Italy) RUSSIA:N/A	POWER STEERING GEAR BOX AND LINKAGE REMOVAL AND INSTALLATION (M372-01-091-89800-01) A B	Attached sheet 14
		ELECTRIC POWER STEERING CONTROL UNIT (EPS-ECU) REMOVAL AND INSTALLATION (M372-00-630-13500-01)	Attached sheet 8

LANCER/LANCER SPORTBACK

<EU/RUSSIA>

Applicable manual	Pub. No.	Applicable title (INFO-ID)	Contents
2011 LANCER/LANCER SPORTBACK Workshop Manual B	CG1E11E1-CD(English) CG1S11E1-CD(Spanish) CG1F11E1-CD(French) CG1G11E1-CD(German) CG1I11E1-CD(Italy) RUSSIA:N/A	POWER STEERING GEAR BOX AND LINKAGE REMOVAL AND INSTALLATION (M372-01-091-89800-01) A B	Attached sheet 14
		ELECTRIC POWER STEERING CONTROL UNIT (EPS-ECU) REMOVAL AND INSTALLATION (M372-00-630-13500-01)	Attached sheet 8
2012 LANCER/LANCER SPORTBACK Workshop Manual	CG1E12E1-CD(English) CG1S12E1-CD(Spanish) CG1F12E1-CD(French) CG1G12E1-CD(German) CG1I12E1-CD(Italy) RUSSIA:N/A -	POWER STEERING GEAR BOX AND LINKAGE REMOVAL AND INSTALLATION (M372-01-091-89800-01) A B	Attached sheet 14
		ELECTRIC POWER STEERING CONTROL UNIT (EPS-ECU) REMOVAL AND INSTALLATION (M372-00-630-13500-01)	Attached sheet 8

<MMNA/CANADA>

Applicable manual	Pub. No.	Applicable title (INFO-ID)	Contents
2011 LANCER/LANCER SPORTBACK Service Manual	MSCD-106B-2011	POWER STEERING GEAR BOX AND LINKAGE REMOVAL AND INSTALLATION (M372-01-091-89800-01) A B	Attached sheet 15
		ELECTRIC POWER STEERING CONTROL UNIT (EPS-ECU) REMOVAL AND INSTALLATION (M372-00-630-13500-01)	Attached sheet 16
2012 LANCER/LANCER SPORTBACK Service Manual	MSCD-106B-2012	POWER STEERING GEAR BOX AND LINKAGE REMOVAL AND INSTALLATION (M372-01-091-89800-01) A B	Attached sheet 15
		ELECTRIC POWER STEERING CONTROL UNIT (EPS-ECU) REMOVAL AND INSTALLATION (M372-00-630-13500-01)	Attached sheet 16

ASX

<EU/RUSSIA/SOUTH AFRICA>

Applicable manual	Pub. No.	Applicable title (INFO-ID)	Contents
2011 ASX Workshop Manual CD-ROM B	CGWE11E2-CD(English) CGWS11E2-CD(Spanish) CGWF11E2-CD(French) CGWG11E2-CD(German) CGWI11E2-CD(Italy) RUSSI:N/A SOUTH AFRICA:DRAFT	ELECTRIC POWER STEERING CONTROL UNIT (EPS-ECU) REMOVAL AND INSTALLATION (M372-00-630-16800-01) A B	Attached sheet 17
2012 ASX Workshop Manual CD-ROM	CGWE12E2-CD(Eng) CGWF12E2-CD(Fre) CGWG12E2-CD(Ger) CGWS12E2-CD(Spa) CGWI12E2-CD(Ita) RUSSIA:N/A South Africa:DRAFT	ELECTRIC POWER STEERING CONTROL UNIT (EPS-ECU) REMOVAL AND INSTALLATION (M372-00-630-16800-01) A B	

<G.EXP/GCC/MMAL/NEW ZEALAND>

Applicable manual	Pub. No.	Applicable title (INFO-ID)	Contents
2011 ASX Workshop Manual CD-ROM	PWPE1006R(English) PWPS1007R(Spanish) B MMAL:DRAFT NEW ZEALAND:DRAFT	ELECTRIC POWER STEERING CONTROL UNIT (EPS-ECU) REMOVAL AND INSTALLATION (M372-00-630-16800-01) A B	Attached sheet 17

<MMNA/CANADA>

Applicable manual	Pub. No.	Applicable title (INFO-ID)	Contents
2011 OUTLANDER SPORT Service Manual CD-ROM	MSCD-017B-2011 B	ELECTRIC POWER STEERING CONTROL UNIT (EPS-ECU) REMOVAL AND INSTALLATION (M372-00-630-16800-01) A B	Attached sheet 18
2012 OUTLANDER SPORT Service Manual CD-ROM	MSCD-017B-2012 B		

<RH drive vehicles>

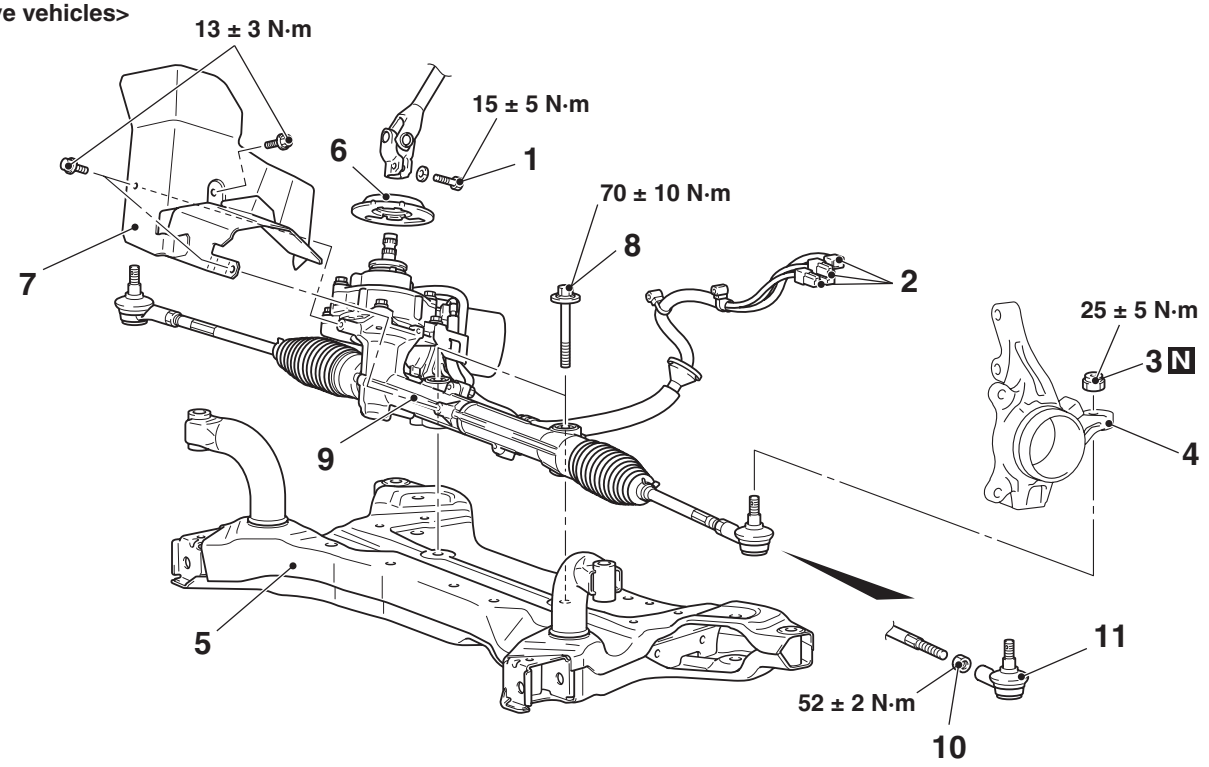

AC611633 AC

		Removal steps
	<Added>	1. Steering gear and steering column assembly connection
<<A>>	>>C<<	2. Electric power steering connector (in-vehicle electoric power steering-ECU)
		3. self-locking nut
<<B>>		4. Tie-rod end and knuckle connection
<<C>>		5. Front axle crossmember
	>>B<<	6. Steering column dash panel cover
		7. Heat protector
		8. Steering gear bolt
		9. Steering gear and linkage assembly
		10. Lock nut
	>>A<<	11. Tie-rod end

REMOVAL SERVICE POINTS

<<A>> ELECTRIC POWER STEERING CONNECTOR REMOVAL

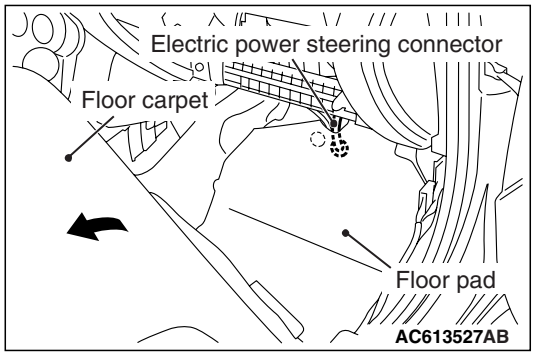

Peel off the floor carpet as shown in the figure. Remove the foor pad and then disconnect the electric power steering connector.

<<B>> TIE-ROD END AND KNUCKLE CONNECTION DISCONNECTION

⚠ CAUTION

- **Do not remove the nut from ball joint. Loosen it and use the special tool to avoid possible damage to ball joint threads.**
- **Hang the special tool with cord to prevent it from falling.**

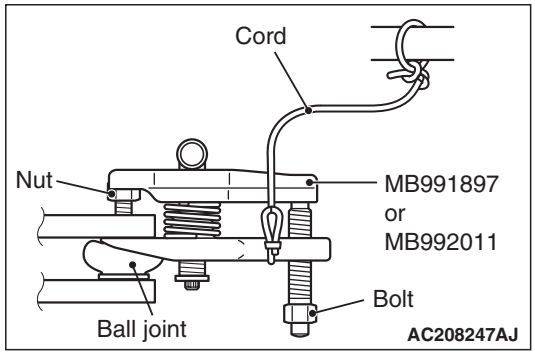

<Added>

>>C<< ELECTRIC POWER STEERING CONNECTOR (IN-VEHICLE ELECTRIC POWER STEERING-ECU) INSTALLATION

⚠ CAUTION

- **Connect the motor harness to electric power steering-ECU without excessive bend or twisting.**
- **Connect the connector securely.**

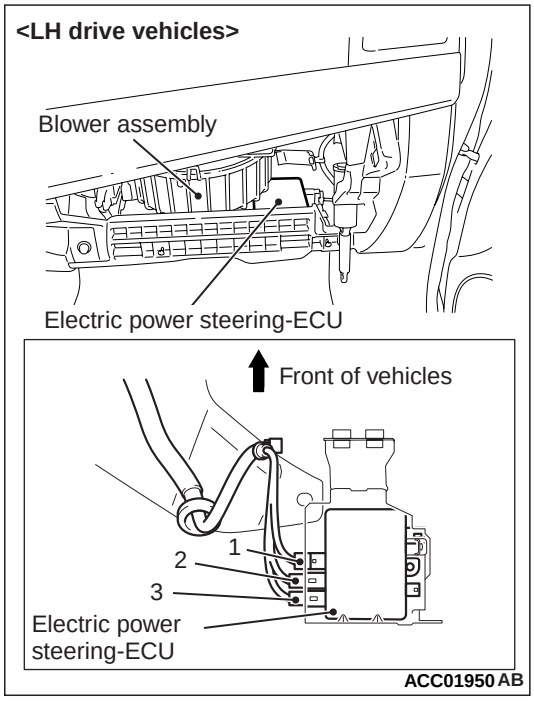

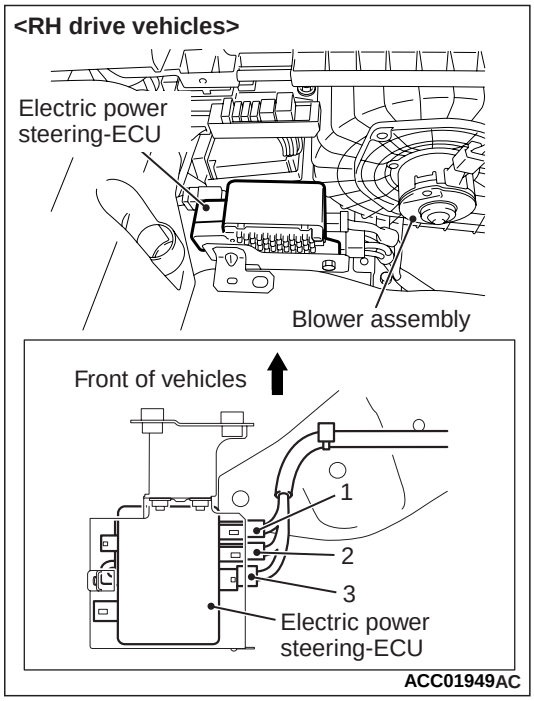

Connect the electric power steering connector to the electric power steering-ECU in the order shown.

ELECTRIC POWER STEERING CONTROL UNIT (EPS-ECU)

REMOVAL AND INSTALLATION

M1372006300094

Pre-removal Operation	Post-installation Operation
• Bottom Cover Removal (Refer to GROUP 52A – Grove Box). • Cowl Side Trim Removal (Refer to GROUP 52A – Interior Trim).	• Cowl Side Trim Installation (Refer to GROUP 52A – Interior Trim). • Bottom Cover Installation (Refer to GROUP 52A – Grove Box).

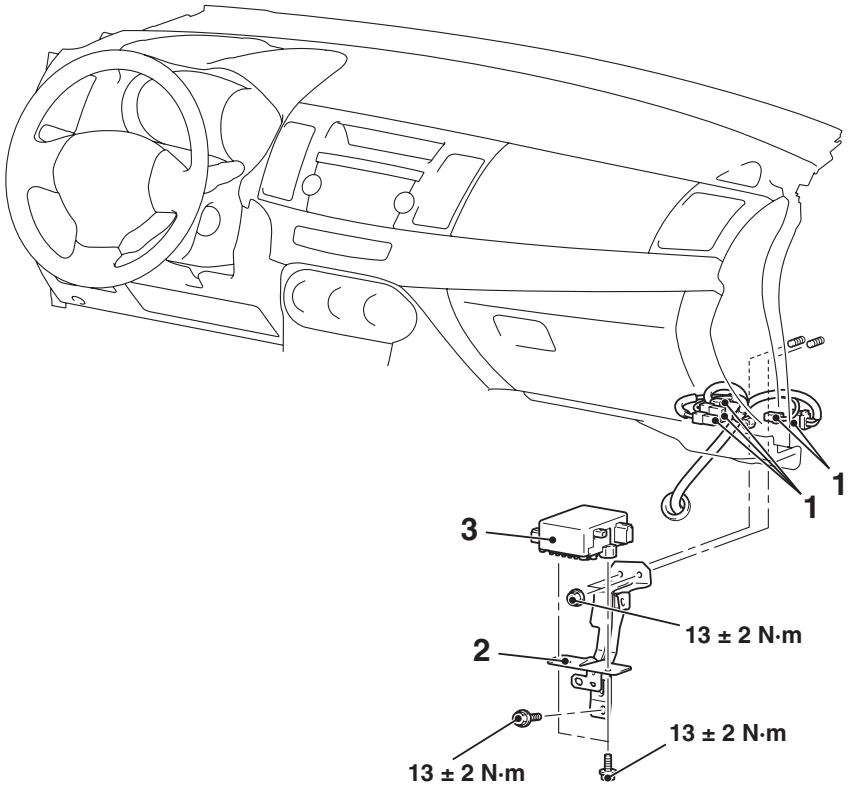

AC612831AB

<Added>

>>A<<

Removal steps

1. Electric power steering-ECU connector

Removal steps (Continued)

2. Electric power steering-ECU bracket
3. Electric power steering-ECU

<Added>

INSTALLATION SERVICE POINT

>>A<< ELECTRIC POWER STEERING-ECU CONNECTOR INSTALLATION

⚠ CAUTION

- **Connect the motor harness to electric power steering-ECU without excessive bend or twisting.**
- **Connect the connector securely.**

Connect the electric power steering connector to the electric power steering-ECU in the order shown.

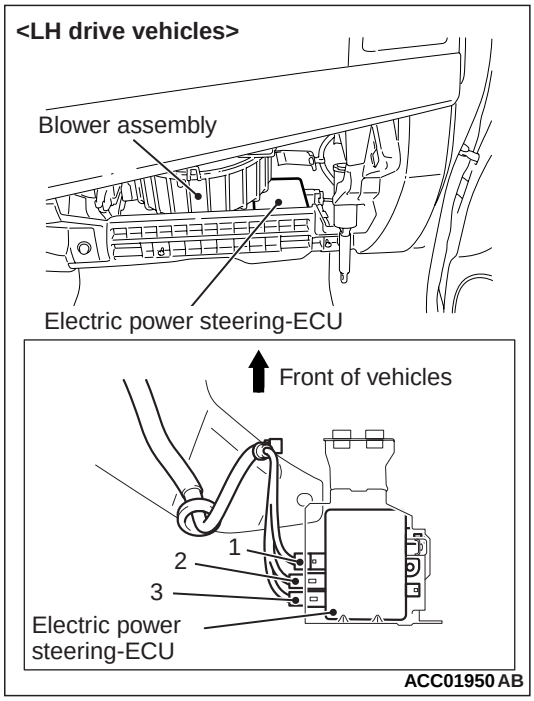

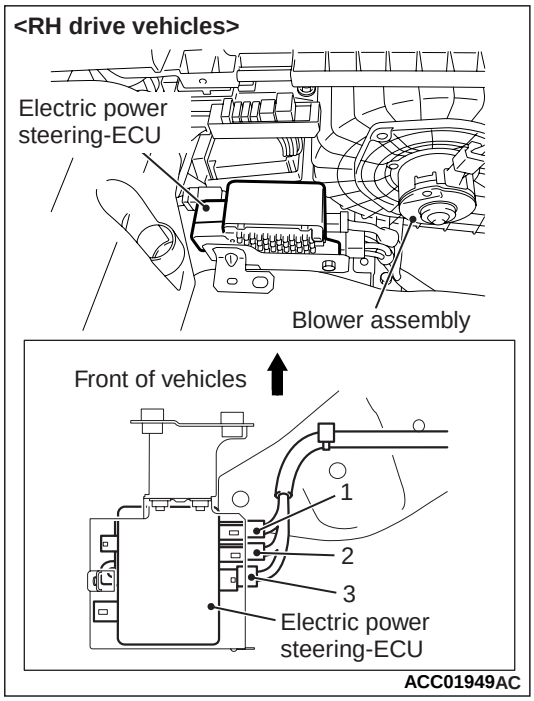

<RHD>

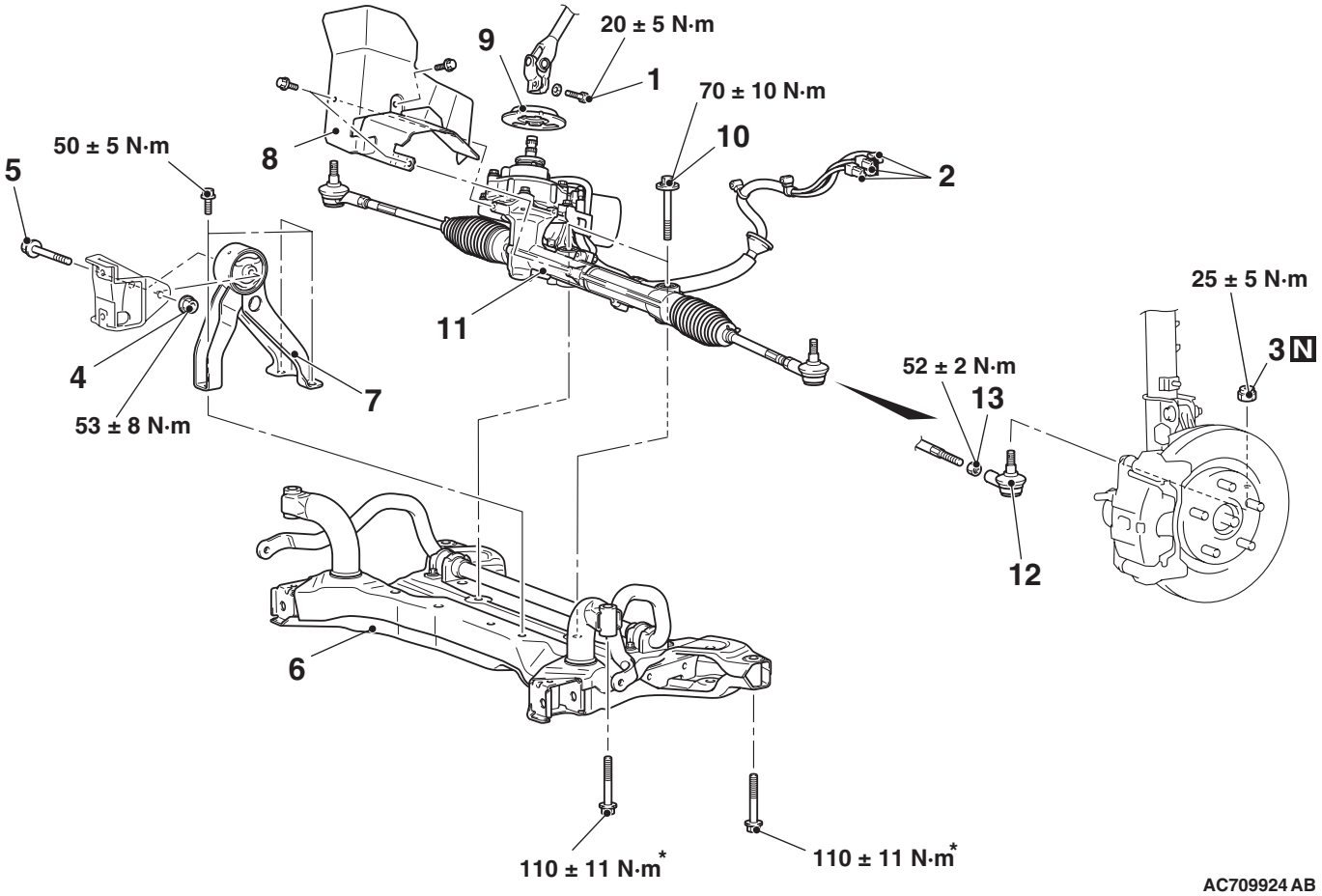

AC709924 AB

Removal steps

<Added>

<<A>> >>B<<

1. Steering column bolt (steering gear and steering column assembly connection)
2. Electric power steering connector (in-vehicle electric power steering-ECU)

<<B>>

3. self-locking nut (Tie-rod end and knuckle connection)
4. Flange nut
5. Rear roll stopper bolt

<<C>>

6. Front axle crossmember

Removal steps (Continued)

7. Rear roll stopper
8. Heat protector

>>A<<

9. Steering column dash panel cover
10. Steering gear bolt
11. Steering gear and linkage
12. Tie-rod end
13. Lock nut

<Added>

>>B<< ELECTRIC POWER STEERING CONNECTOR (IN-VEHICLE ELECTRIC POWER STEERING-ECU) INSTALLATION

⚠ CAUTION

- **Connect the motor harness to electric power steering-ECU without excessive bend or twisting.**
- **Connect the connector securely.**

<LHD>

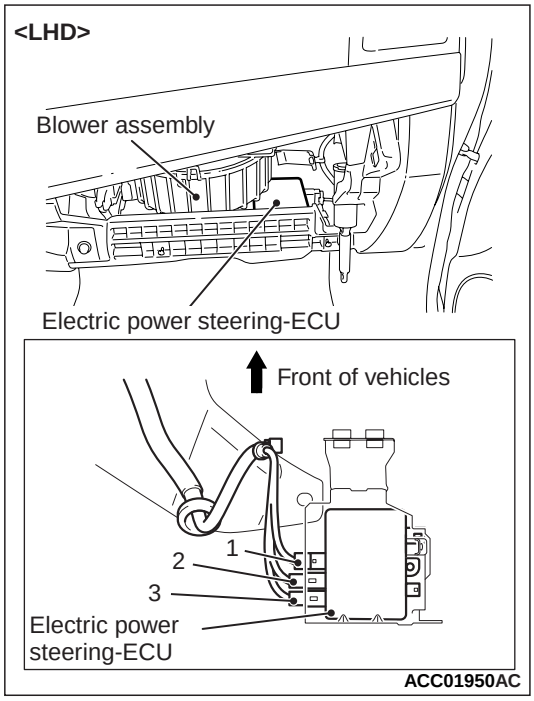

<RHD>

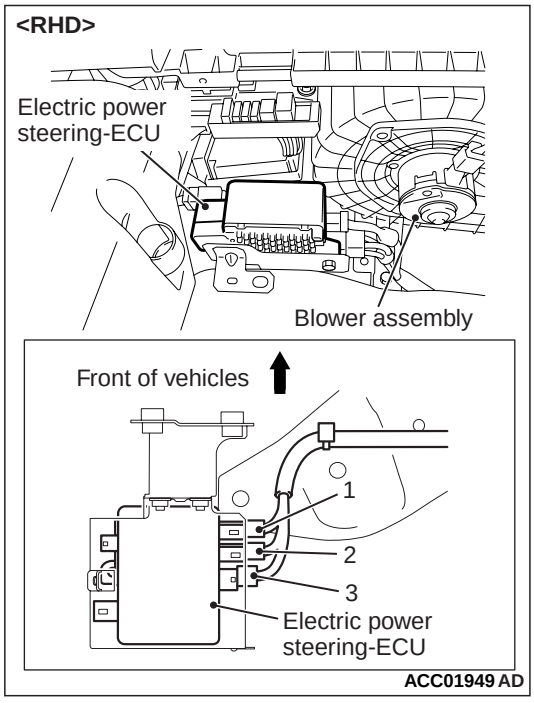

Connect the electric power steering connector to the electric power steering-ECU in the order shown.

<RHD>

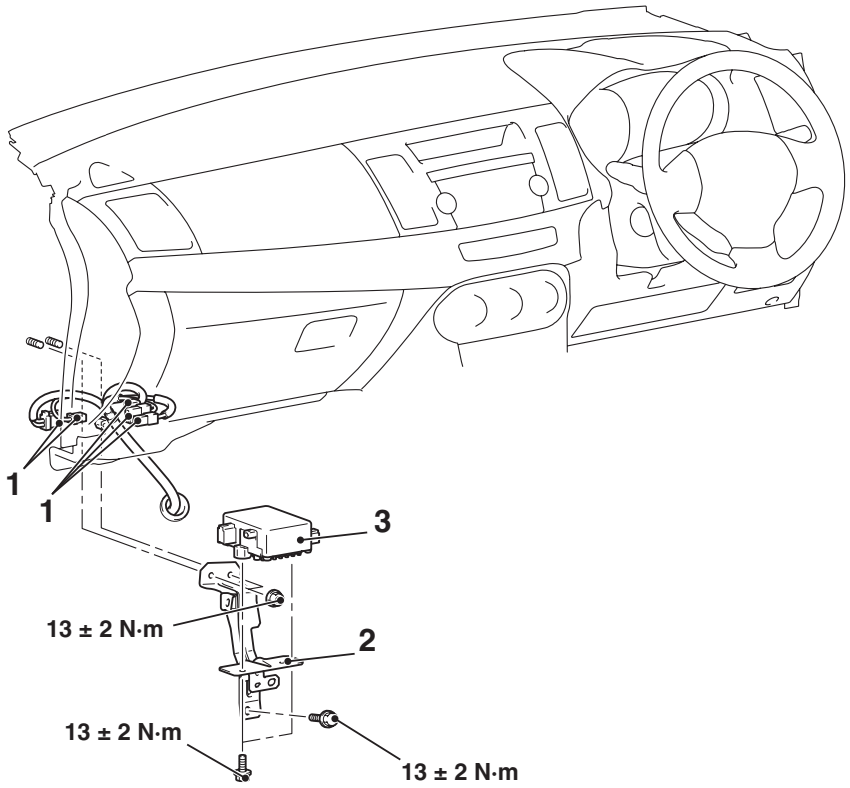

<Added>

AC710020AB

>>**A**<<

Removal steps

1. Electric power steering-ECU connector

Removal steps (Continued)

2. Electric power steering-ECU bracket
3. Electric power steering-ECU

<Added>

INSTALLATION SERVICE POINT

>>A<< ELECTRIC POWER STEERING-ECU CONNECTOR INSTALLATION

⚠ CAUTION

- **Connect the motor harness to electric power steering-ECU without excessive bend or twisting.**
- **Connect the connector securely.**

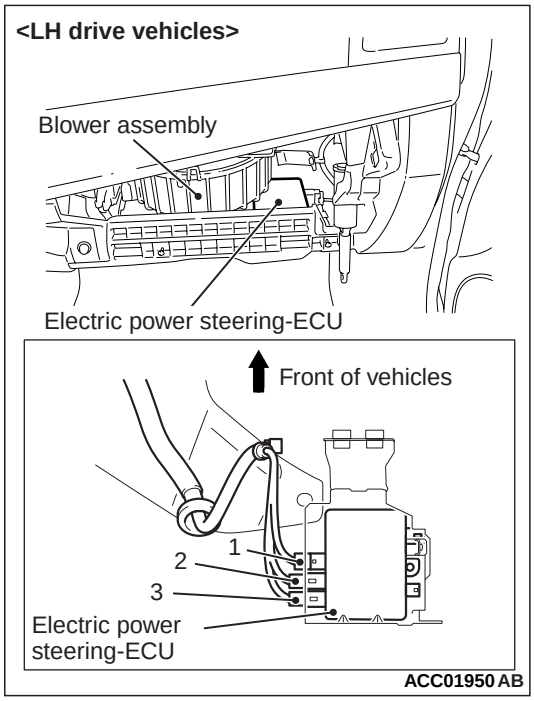

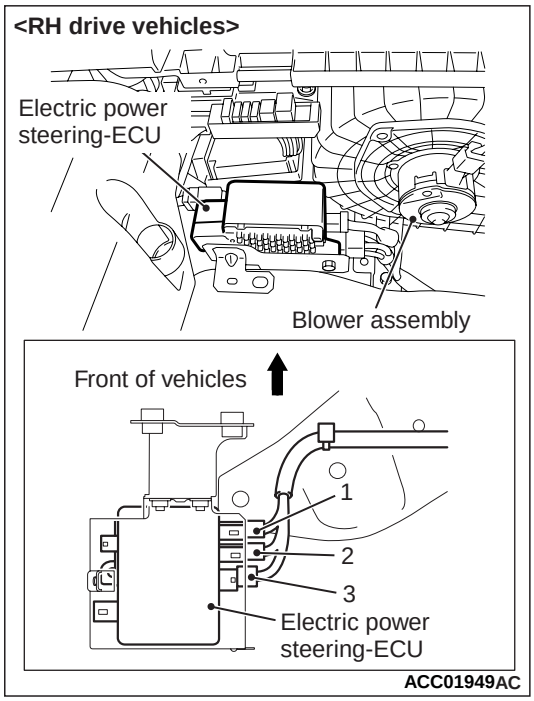

Connect the electric power steering connector to the electric power steering-ECU in the order shown.

<RH drive vehicles>

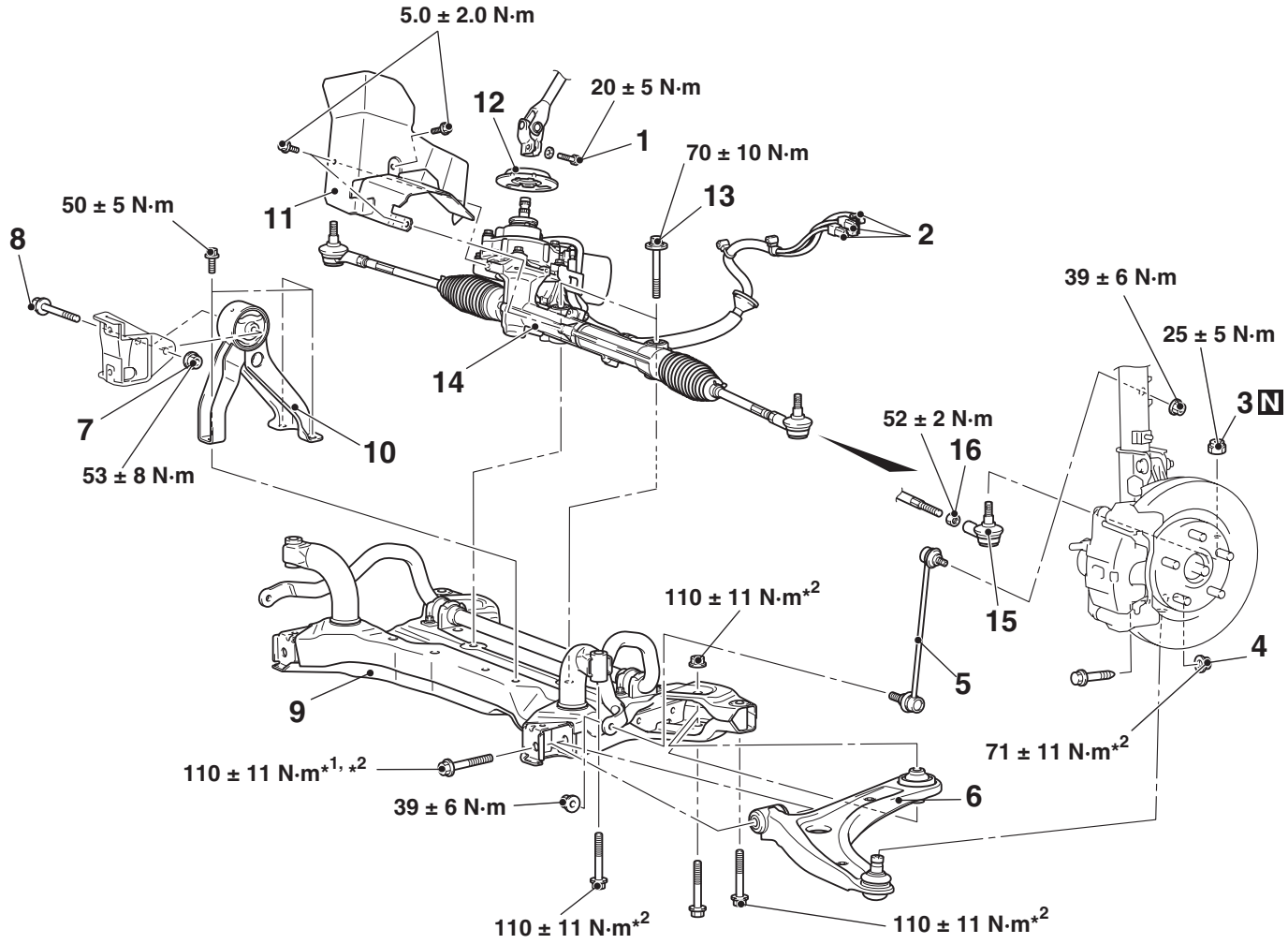

AC702035AB

Removal steps

	<Added>	1. Steering gear and steering column assembly connection
<<A>>	>>C<<	2. Electric power steering connector (in-vehicle electric power steering-ECU)
<<B>>		3. self-locking nut
		4. Flange nut (Lower arm and knuckle connection)
		5. Stabilizer link
		6. Lower arm assembly
		7. Flange nut
		8. Rear roll stopper bolt
<<C>>		9. Front axle crossmember
		10. Rear roll stopper
		11. Heat protector
	>>B<<	12. Steering column dash panel cover
		13. Steering gear bolt
		14. Steering gear and linkage assembly
	>>A<<	15. Tie-rod end
		16. Lock nut

REMOVAL SERVICE POINTS

<<A>> ELECTRIC POWER STEERING CONNECTOR REMOVAL

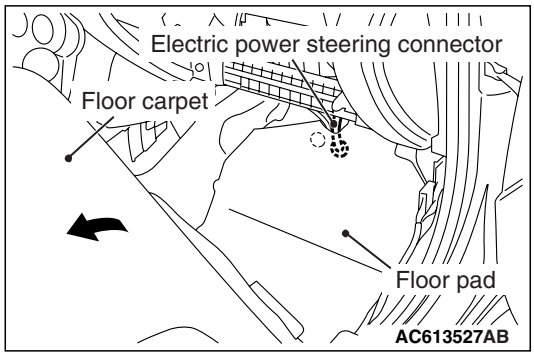

Peel off the floor carpet as shown in the figure. Remove the floor pad and then disconnect the electric power steering connector.

<Added>

>>C<< ELECTRIC POWER STEERING CONNECTOR (IN-VEHICLE ELECTRIC POWER STEERING-ECU) INSTALLATION

⚠ CAUTION

- **Connect the motor harness to electric power steering-ECU without excessive bend or twisting.**
- **Connect the connector securely.**

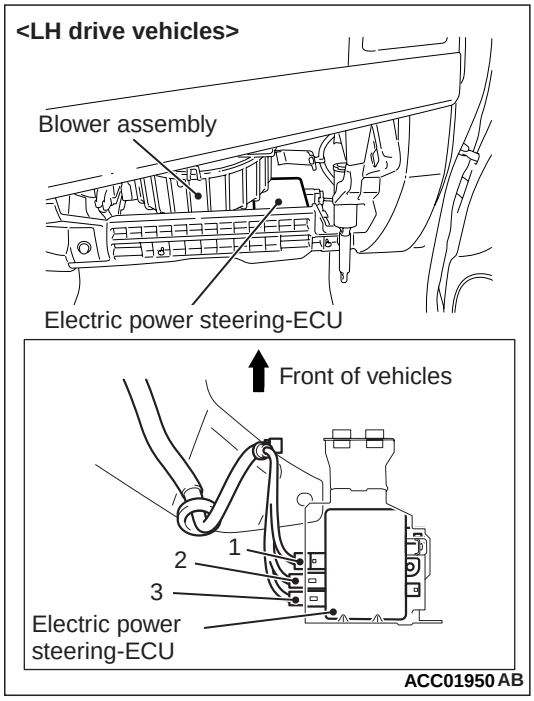

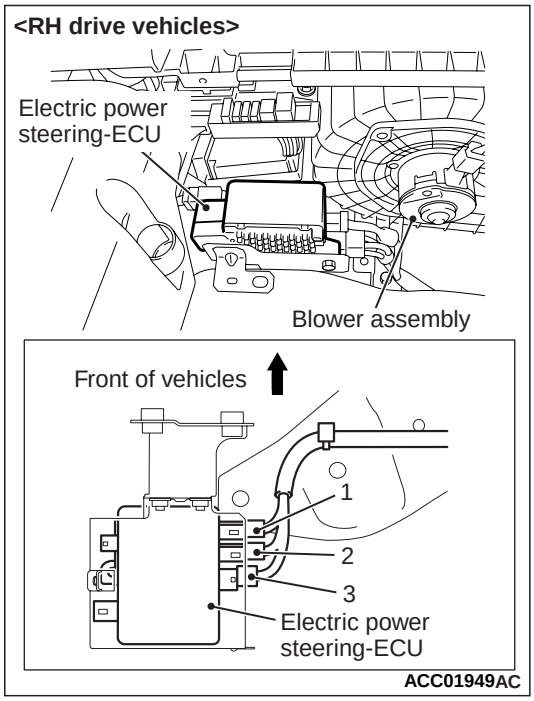

Connect the electric power steering connector to the electric power steering-ECU in the order shown.

ELECTRIC POWER STEERING CONTROL UNIT (EPS-ECU)

REMOVAL AND INSTALLATION

M1372006300102

Pre-removal Operation	Post-installation Operation
• Bottom Cover Removal (Refer to GROUP 52A – Grove Box). • Cowl Side Trim Removal (Refer to GROUP 52A – Trim).	• Cowl Side Trim Installation (Refer to GROUP 52A – Trim). • Bottom Cover Installation (Refer to GROUP 52A – Grove Box).

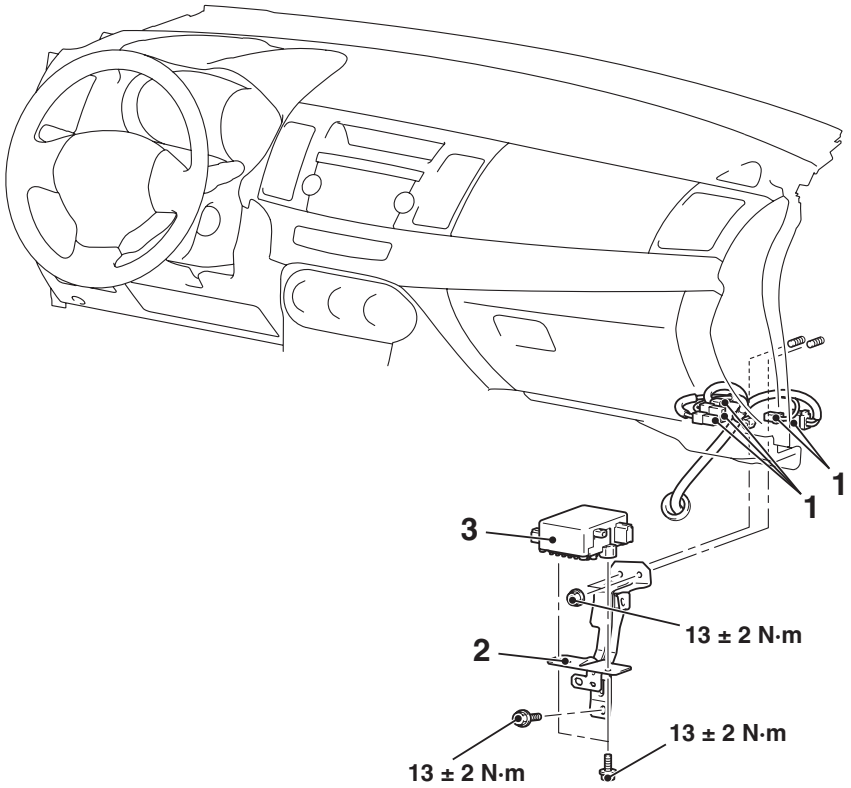

<Added>

AC612831AB

Removal steps

>>**A**<<

1. Electric power steering-ECU connector

Removal steps (Continued)

2. Electric power steering-ECU bracket
3. Electric power steering-ECU

<Added>

INSTALLATION SERVICE POINT

>>A<< ELECTRIC POWER STEERING-ECU CONNECTOR INSTALLATION

⚠ CAUTION

- **Connect the motor harness to electric power steering-ECU without excessive bend or twisting.**
- **Connect the connector securely.**

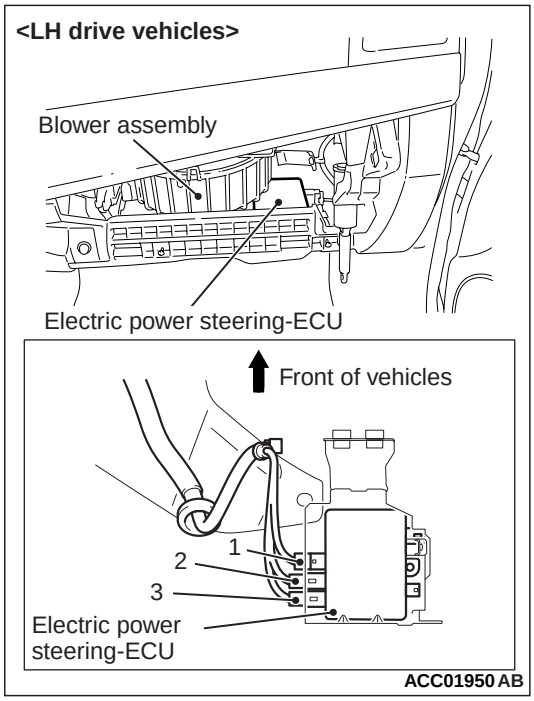

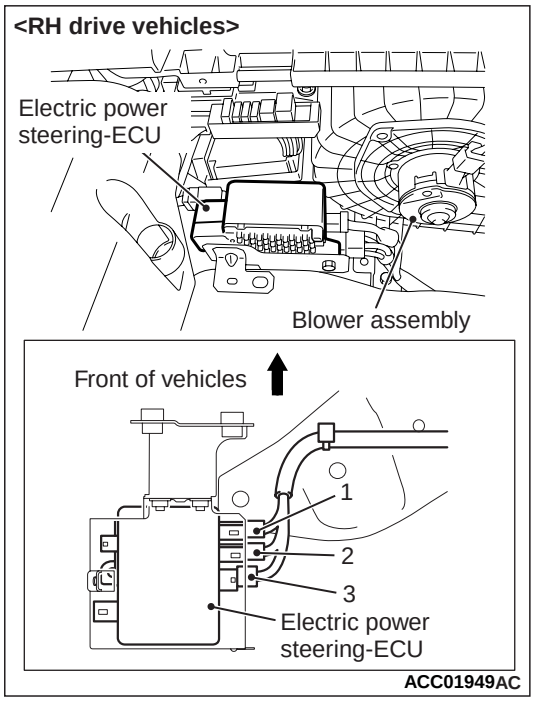

Connect the electric power steering connector to the electric power steering-ECU in the order shown.

<RHD>

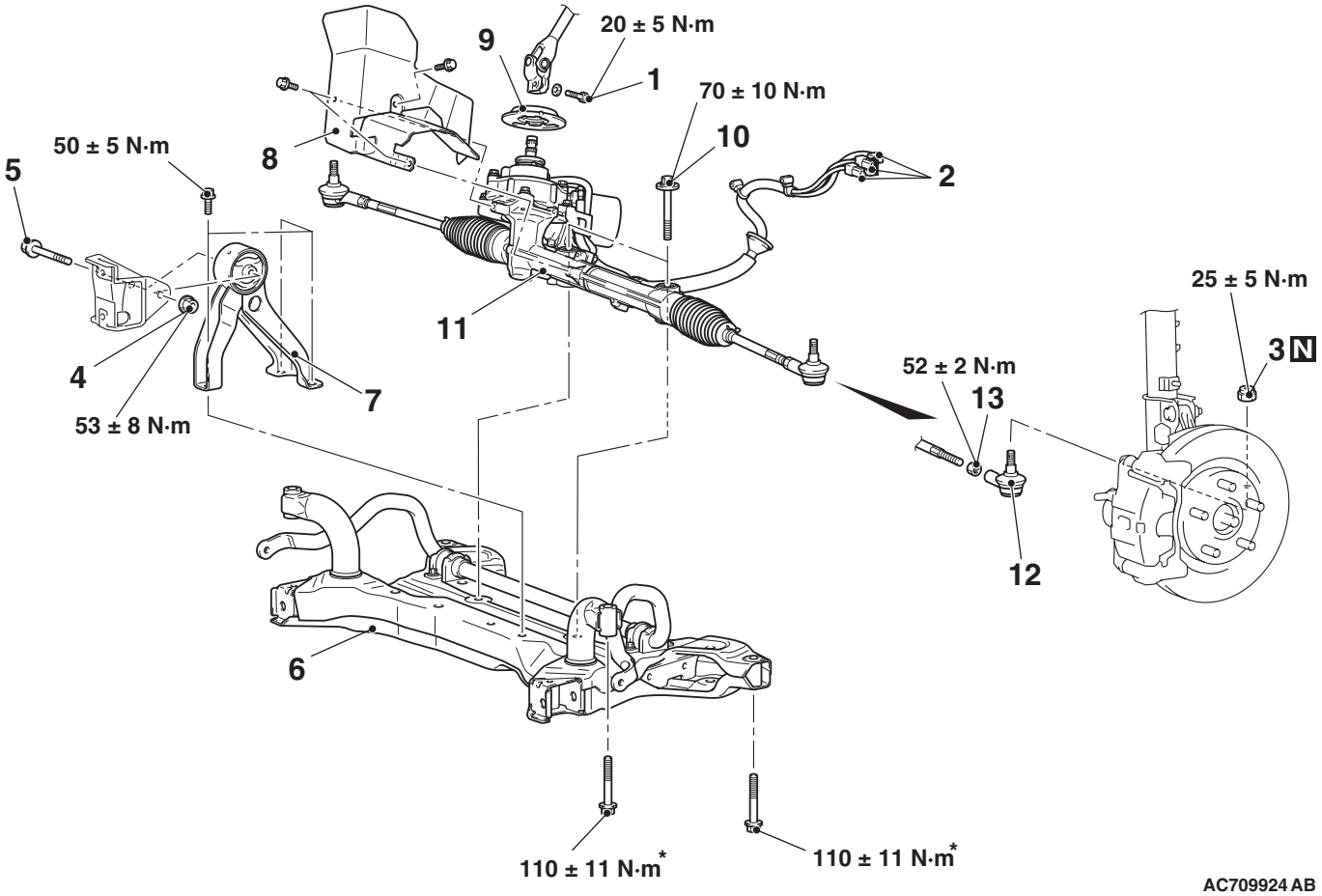

AC709924 AB

<Added>

Removal steps

1. Steering column bolt (steering gear and steering column assembly connection)
2. Electric power steering connector (in-vehicle electric power steering-ECU)
3. self-locking nut (Tie-rod end and knuckle connection)
4. Flange nut
5. Rear roll stopper bolt
6. Front axle crossmember

Removal steps (Continued)

7. Rear roll stopper
8. Heat protector
9. Steering column dash panel cover
10. Steering gear bolt
11. Steering gear and linkage assembly
12. Tie-rod end
13. Lock nut

<<A>> >>C<<

<<B>>

<<C>>

>>B<<

>>A<<

>>A<<

<Added>

>>C<< ELECTRIC POWER STEERING CONNECTOR (IN-VEHICLE ELECTRIC POWER STEERING-ECU) INSTALLATION

⚠ CAUTION

- **Connect the motor harness to electric power steering-ECU without excessive bend or twisting.**
- **Connect the connector securely.**

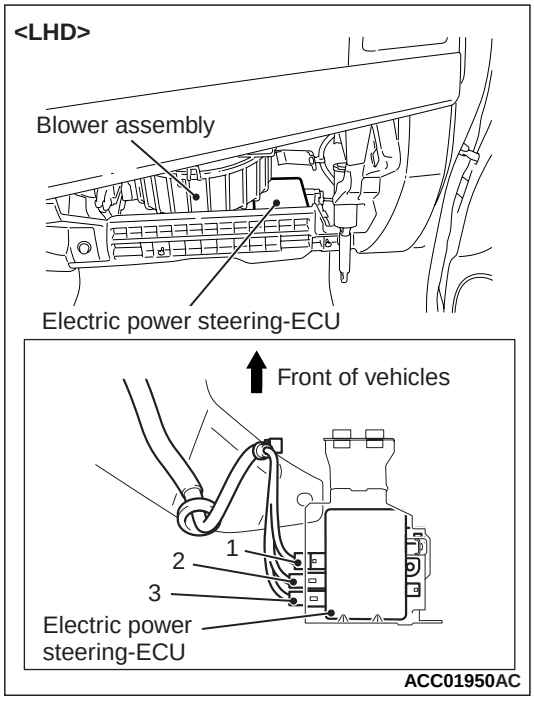

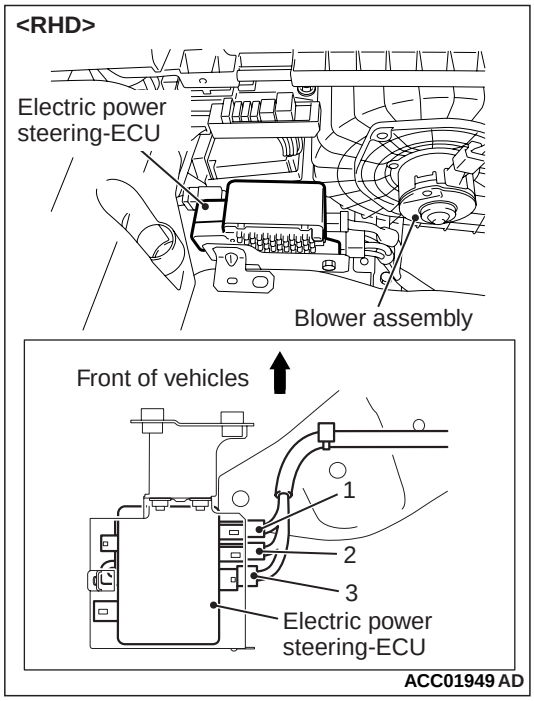

Connect the electric power steering connector to the electric power steering-ECU in the order shown.

<RHD>

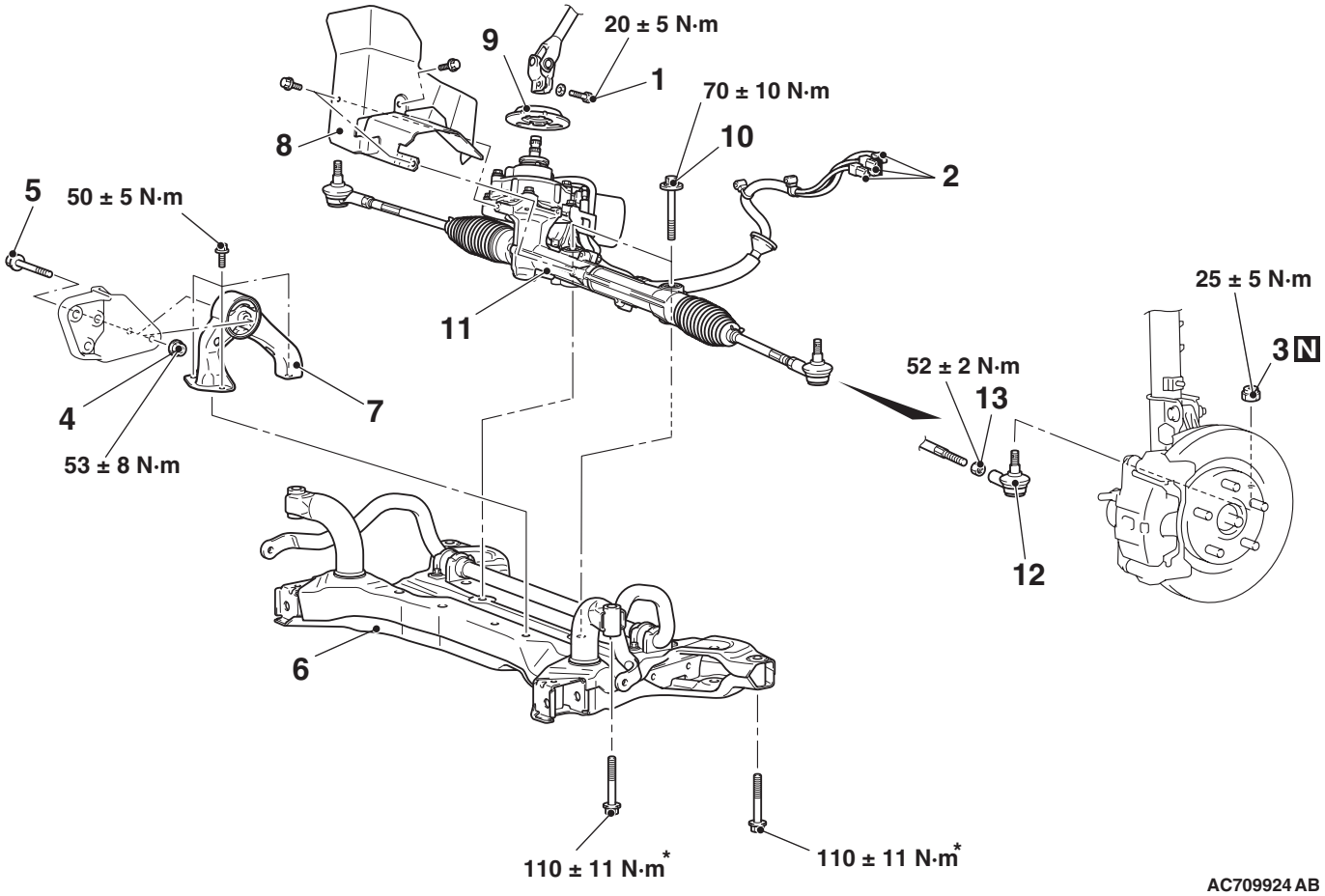

AC709924 AB

Removal steps

<Added>

<<A>> >>B<<

1. Steering column bolt (steering gear and steering column assembly connection)
2. Electric power steering connector (in-vehicle electric power steering-ECU)

<<B>>

3. self-locking nut (Tie-rod end and knuckle connection)
4. Flange nut
5. Rear roll stopper bolt

<<C>>

6. Front axle crossmember

Removal steps (Continued)

7. Rear roll stopper
8. Heat protector

>>A<<

9. Steering column dash panel cover
10. Steering gear bolt
11. Steering gear and linkage
12. Tie-rod end
13. Lock nut

<Added>

>>B<< ELECTRIC POWER STEERING CONNECTOR (IN-VEHICLE ELECTRIC POWER STEERING-ECU) INSTALLATION

⚠ CAUTION

- **Connect the motor harness to electric power steering-ECU without excessive bend or twisting.**
- **Connect the connector securely.**

<LHD>

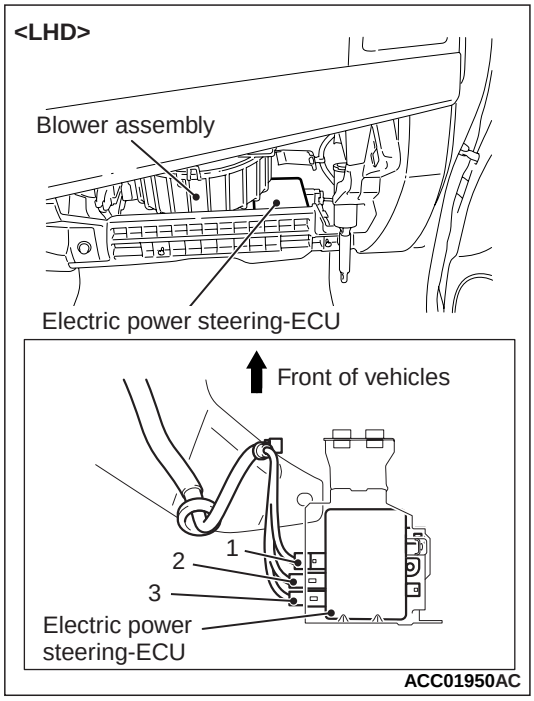

<RHD>

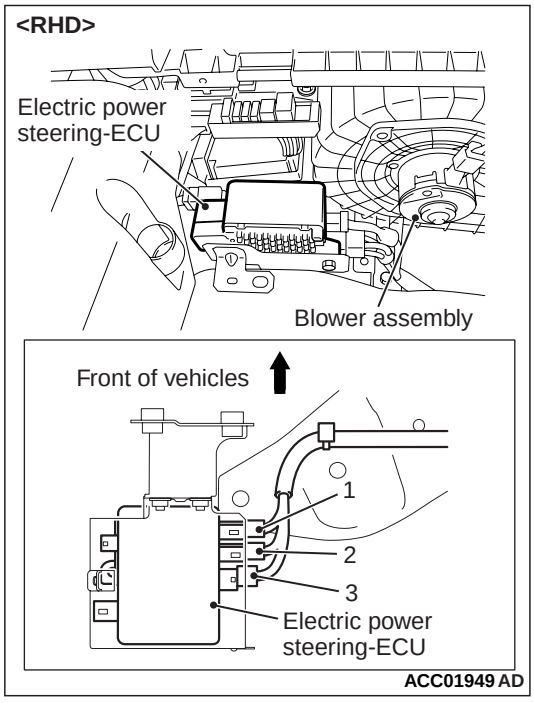

Connect the electric power steering connector to the electric power steering-ECU in the order shown.

<RHD>

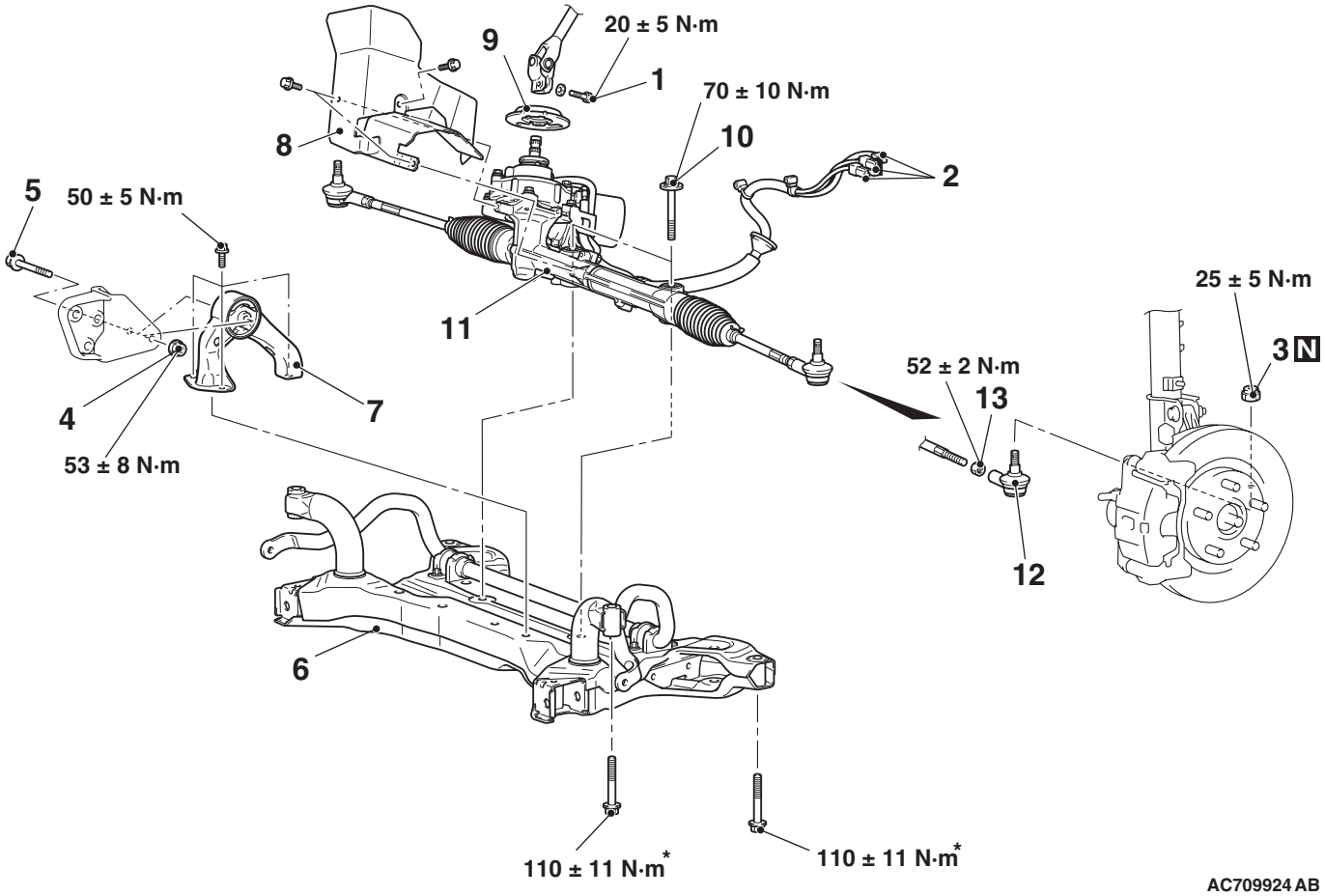

AC709924 AB

Removal steps

<Added>

<<A>> >>B<<

1. Steering column bolt (steering gear and steering column assembly connection)
2. Electric power steering connector (in-vehicle electric power steering-ECU)

<<B>>

3. self-locking nut (Tie-rod end and knuckle connection)
4. Flange nut
5. Rear roll stopper bolt

<<C>>

6. Front axle crossmember

Removal steps (Continued)

7. Rear roll stopper
8. Heat protector

>>A<<

9. Steering column dash panel cover
10. Steering gear bolt
11. Steering gear and linkage assembly
12. Tie-rod end
13. Lock nut

<Added>

>>B<< ELECTRIC POWER STEERING CONNECTOR (IN-VEHICLE ELECTRIC POWER STEERING-ECU) INSTALLATION

⚠ CAUTION

- **Connect the motor harness to electric power steering-ECU without excessive bend or twisting.**
- **Connect the connector securely.**

<LHD>

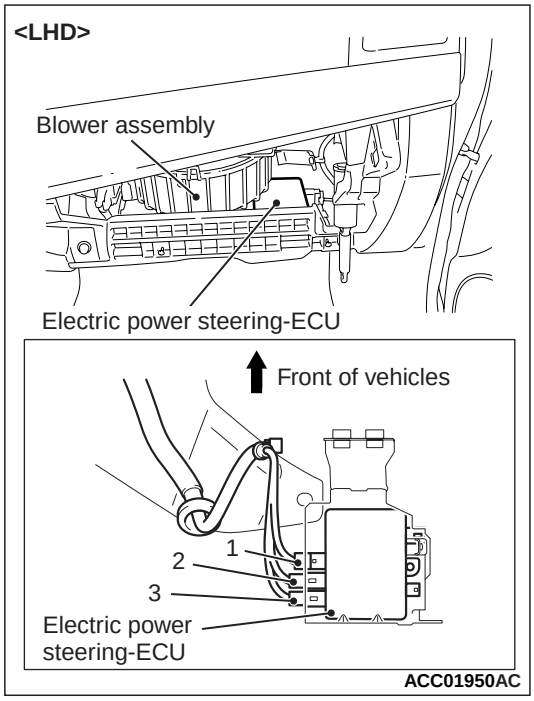

<RHD>

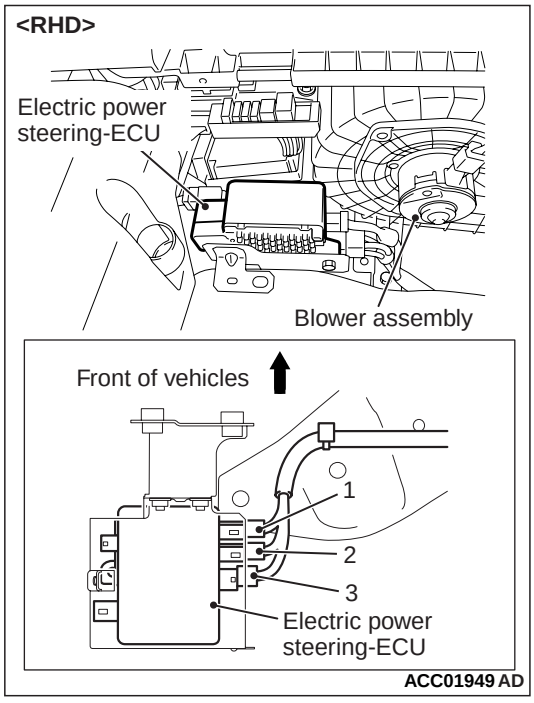

Connect the electric power steering connector to the electric power steering-ECU in the order shown.

<RHD>

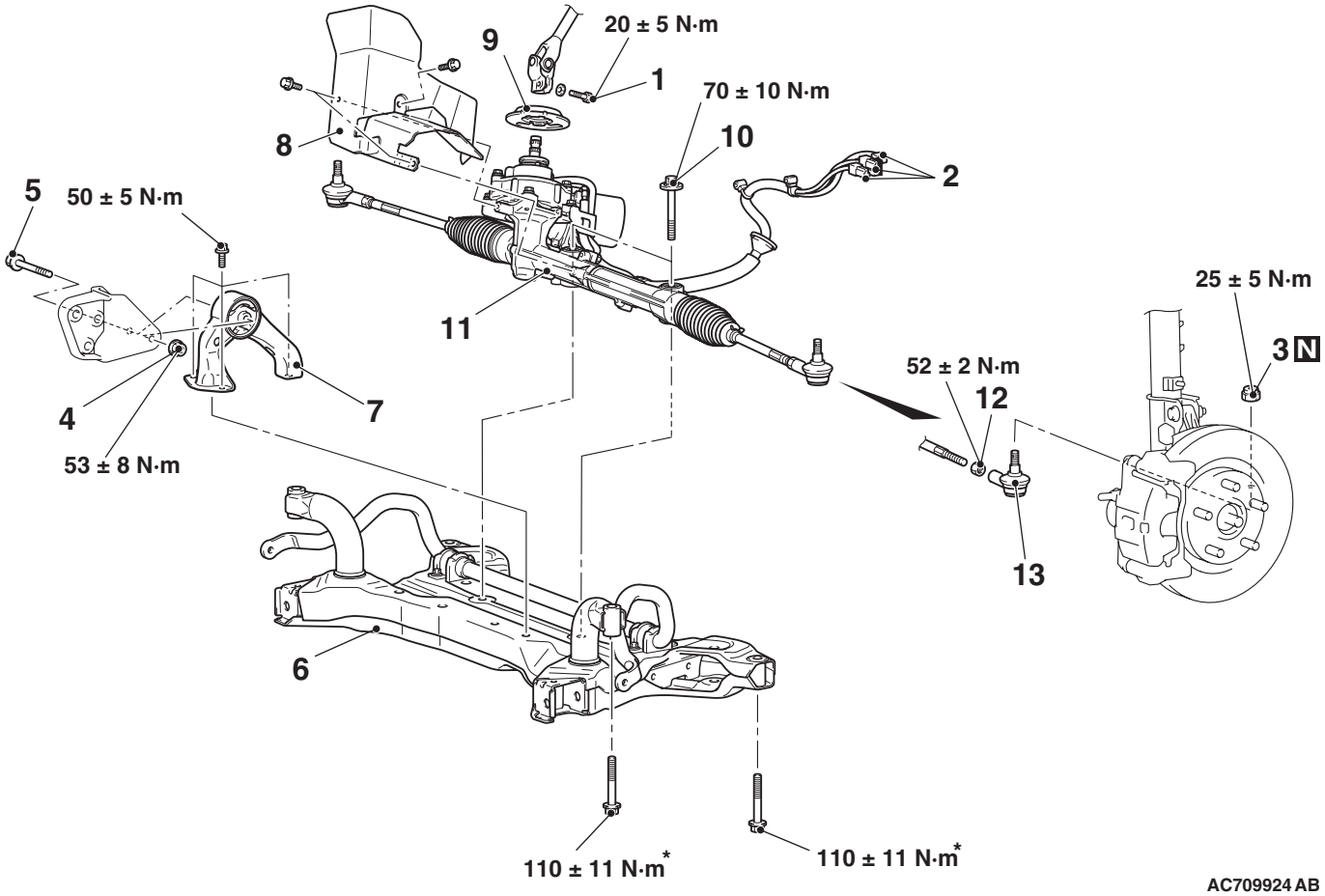

AC709924 AB

Removal steps

<Added>

<<A>> >>B<<

1. Steering column bolt (steering gear and steering column assembly connection)
2. Electric power steering connector (in-vehicle electric power steering-ECU)

<<B>>

3. self-locking nut (Tie-rod end and knuckle connection)
4. Flange nut
5. Rear roll stopper bolt

<<C>>

6. Front axle crossmember

Removal steps (Continued)

7. Rear roll stopper
8. Heat protector

>>A<<

9. Steering column dash panel cover
10. Steering gear bolt
11. Steering gear and linkage
12. Lock nut
13. Tie-rod end

<Added>

>>B<< ELECTRIC POWER STEERING CONNECTOR (IN-VEHICLE ELECTRIC POWER STEERING-ECU) INSTALLATION

⚠ CAUTION

- **Connect the motor harness to electric power steering-ECU without excessive bend or twisting.**
- **Connect the connector securely.**

<LHD>

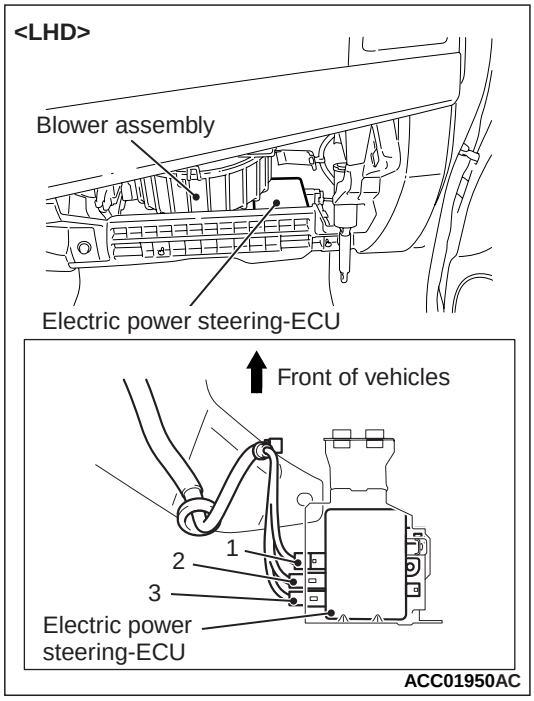

<RHD>

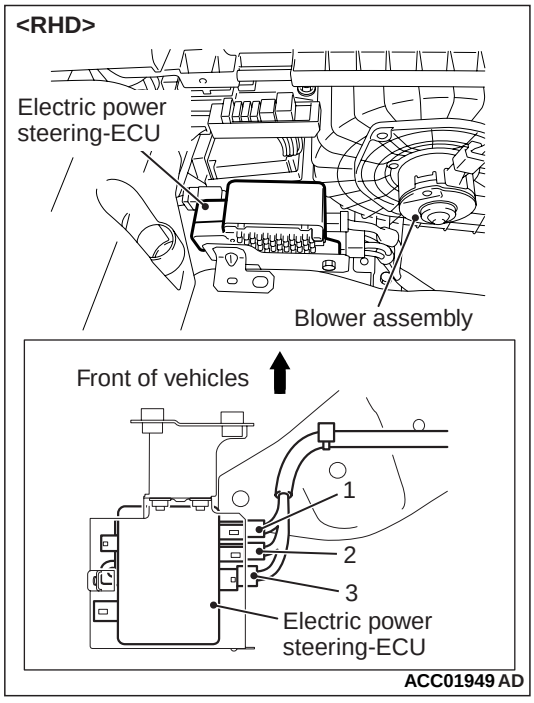

Connect the electric power steering connector to the electric power steering-ECU in the order shown.

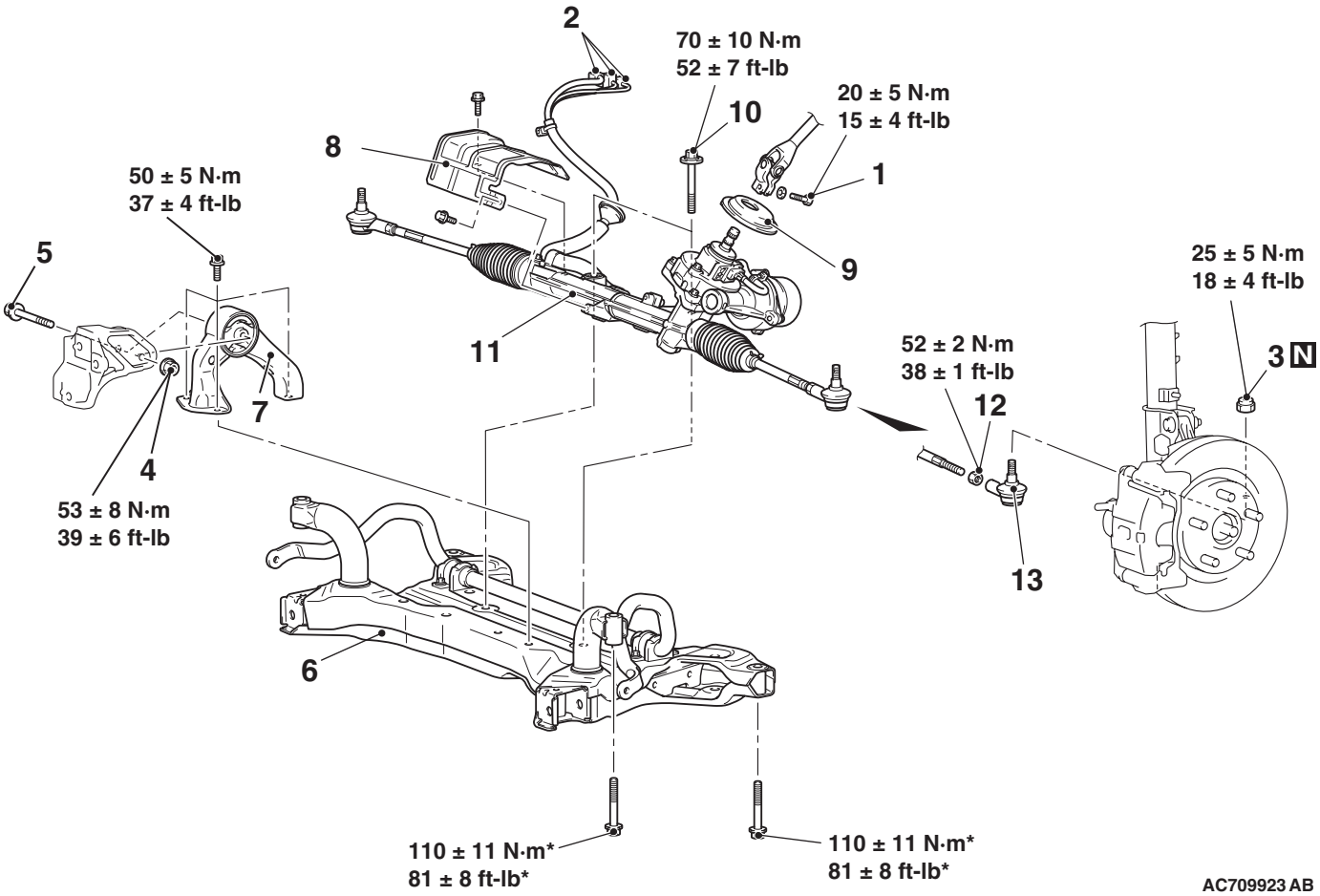

Removal steps

<Added>

<<A>> >>B<<

1. Steering column bolt (steering gear and steering column assembly connection)
2. Electric power steering connector (in-vehicle electric power steering-ECU)

<<B>>

3. Jam nut (Tie-rod end and knuckle connection)
4. Flange nut
5. Rear roll stopper center bolt

<<C>>

6. Front axle crossmember
7. Rear roll stopper

Removal steps (Continued)

>>A<<

8. Heat protector
9. Steering column dash panel cover
10. Steering gear bolt
11. Steering gear and linkage
12. Jam nut
13. Tie-rod end

Required Special Tool:

- MB991897 or MB992011: Ball Joint Remover

<Added>

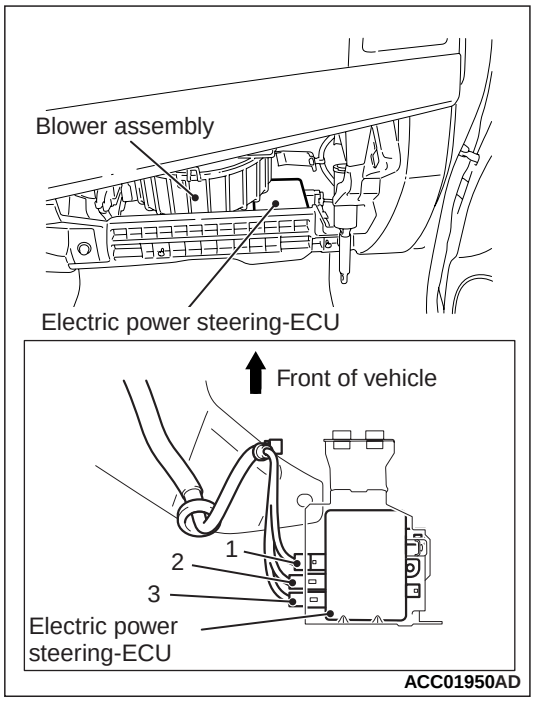

>>B<< ELECTRIC POWER STEERING CONNECTOR (IN-VEHICLE ELECTRIC POWER STEERING-ECU) INSTALLATION

⚠ CAUTION

- **Connect the motor harness to electric power steering-ECU without excessive bend or twisting.**
- **Connect the connector securely.**

Connect the electric power steering connector to the electric power steering-ECU in the order shown.

ELECTRIC POWER STEERING CONTROL UNIT (EPS-ECU)

REMOVAL AND INSTALLATION

M1372006300135

Pre-removal Operation	Post-installation Operation
• Bottom Cover Removal (Refer to GROUP 52A – Glove Box). • Cowl Side Trim Removal (Refer to GROUP 52A – Trim).	• Cowl Side Trim Installation (Refer to GROUP 52A – Trim). • Bottom Cover Installation (Refer to GROUP 52A – Glove Box).

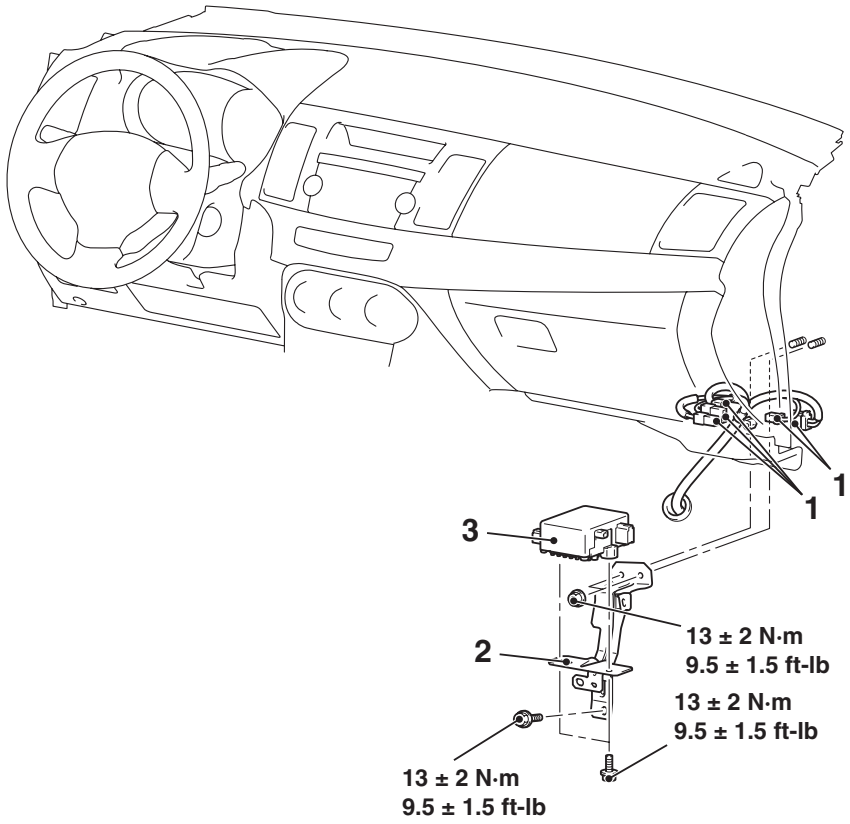

AC612831AC

<Added>

>>A<<

Removal steps

1. Electric power steering-ECU connector

Removal steps (Continued)

2. Electric power steering-ECU bracket
3. Electric power steering-ECU

<Added>

Attached sheet 16(2/2)

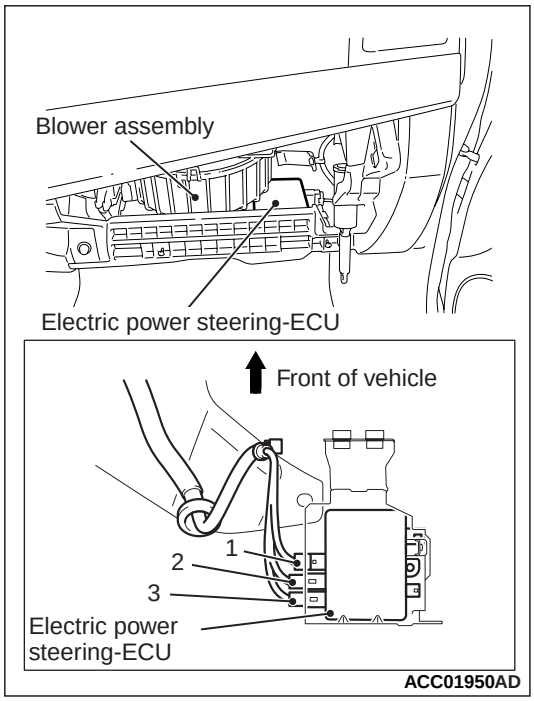

INSTALLATION SERVICE POINT

>>A<< ELECTRIC POWER STEERING CONNECTOR INSTALLATION

⚠ CAUTION

- **Connect the motor harness to electric power steering-ECU without excessive bend or twisting.**
- **Connect the connector securely.**

Connect the electric power steering connector to the electric power steering-ECU in the order shown.

Attached sheet 17

<RHD>

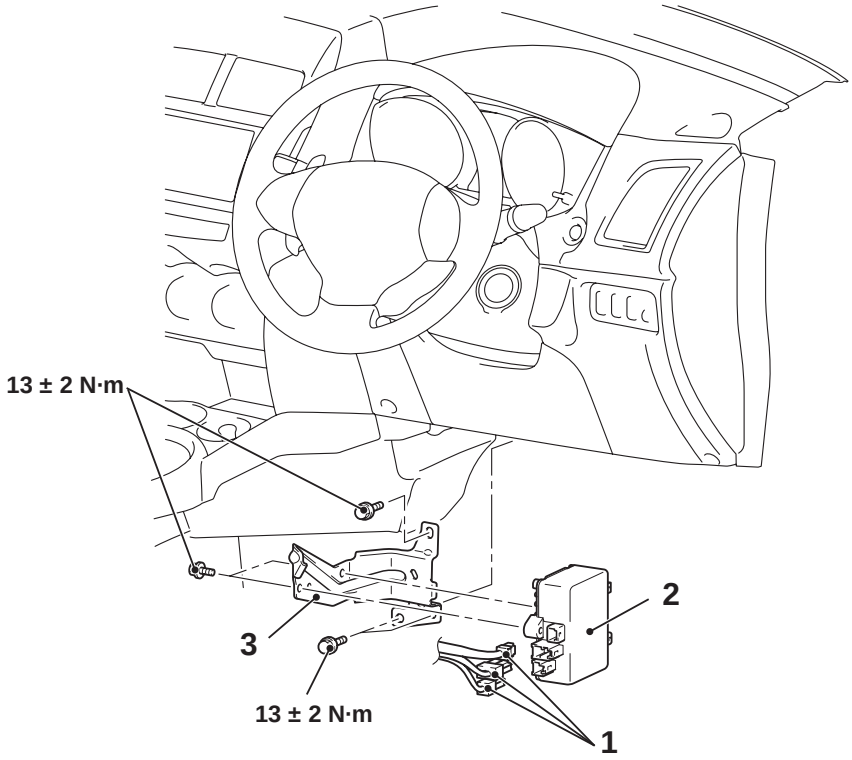

AC904854AC

Removal steps

>>A<< 1. EPS-ECU connector
2. EPS-ECU
3. EPS-ECU bracket

INSTALLATION SERVICE POINTS

>>A<< EPS-ECU CONNECTOR CONNECTION

<Old>

⚠ CAUTION

~~**Connect the motor harness to EPS-ECU without excessive bend or twisting.**~~

~~Connect the connector securely.~~

<New>

1. Install the clip in the vehicle body.
2. Connect the EPS-ECU connector to the EPS-ECU in the order shown.

<RHD>

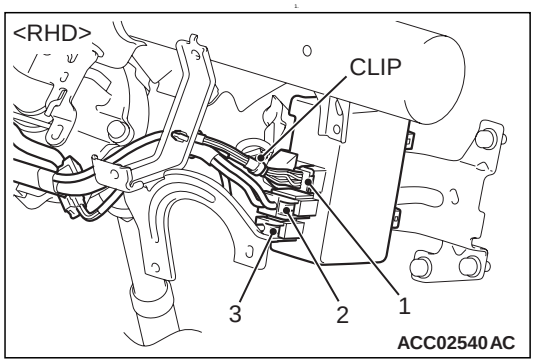

1. Connect the No.1 EPS-ECU connector to the EPS-ECU.
2. Install the clip in the vehicle body.
3. Connect the No.2 EPS-ECU connector to the EPS-ECU.
4. Connect the No.3 EPS-ECU connector to the EPS-ECU.

⚠ CAUTION

- **Connect the motor harness to EPS-ECU without excessive bend or twisting.**
- **Connect the connector securely.**

<LHD>

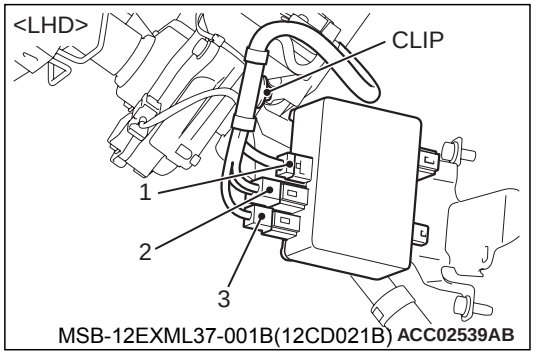

ELECTRIC POWER STEERING CONTROL UNIT (EPS-ECU)

REMOVAL AND INSTALLATION

M1372006300168

⚠ CAUTION

- **Do not reuse the product that has been dropped because its internal components may be defective even if it has no apparent damage.**
- **Always keep EPS-ECU away from the matter that generates magnetic force.**

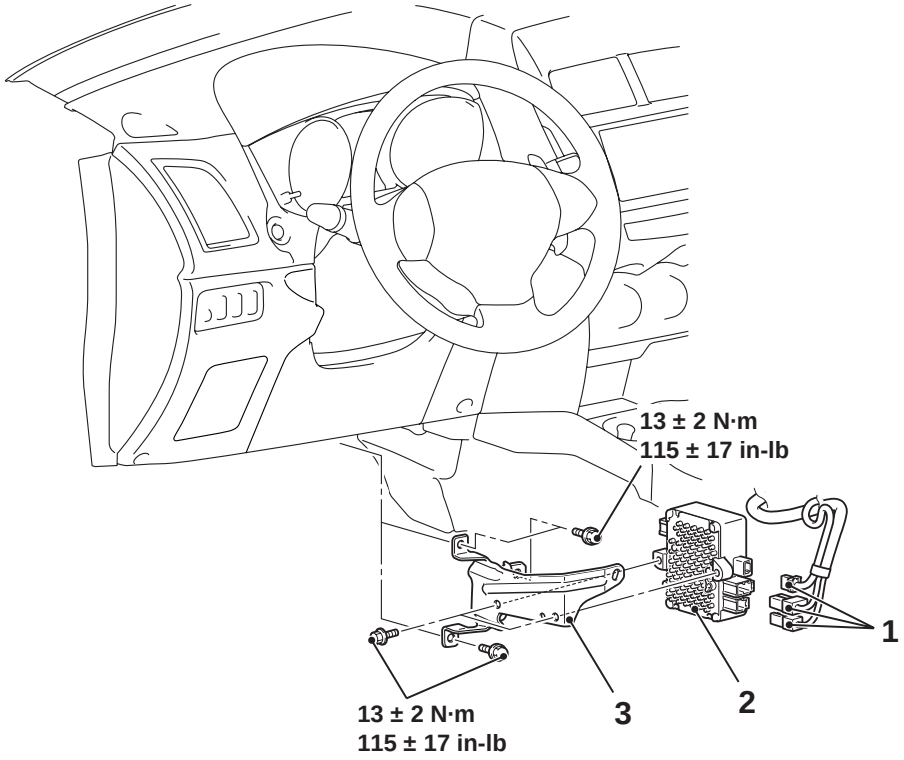

Removal steps

>>A<< 1. EPS-ECU connector

Removal steps (Continued)

2. EPS-ECU
3. EPS-ECU bracket

INSTALLATION SERVICE POINT

>>A<< EPS-ECU CONNECTOR CONNECTION

<Old>

⚠ CAUTION

~~**Connect the motor harness to EPS-ECU without excessive bend or twisting.**~~

~~Connect the connector securely.~~

<New>

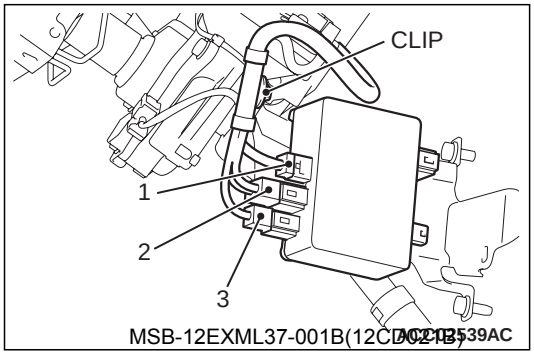

⚠ CAUTION

- **Connect the motor harness to EPS-ECU without excessive bend or twisting.**
- **Connect the connector securely.**

1. Install the clip in the vehicle body.
2. Connect the EPS-ECU connector to the EPS-ECU in the order shown.