SERVICE BULLETIN

MITSUBISHI MOTORS

GLOBAL AFTER SALES OFFICE. MITSUBISHI MOTORS CORPORATION

PURPOSE : INFORMATION	ISSUE NO. : MSB-12EXML42-001	DATE : 2012-9-10
SUBJECT : REMOVAL AND INSTALLATION OF FRONT FENDER		<Destination/Model> (AS SHOWN BELOW) <M/Y> 12
GROUP : BODY		LANCER EVOLUTION(CZ4A)

1. Description:

See the attached sheets for the information about the change of mention in the applicable service manual.

2. Applicable manual:

Destination	Applicable manual	Pub.No.	Applicable title (INFO ID)	Content
EU	2012 LANCER EVOLUTION WORKSHOP MANUAL	CGEE12E1 (English) CGEF12E1 (French) CGEG12E1 (German) CGES12E1 (Spanish) CGEI12E1 (Italian)	FENDER REMOVAL AND INSTALLATION (M421-00-191-41300-01)	Attached sheet 2
EXP		G.EXP/GCC/CHINA/MMAL/NZ/BRUNEI/SINGAPORE/MALAYSIA:/INDIA: PWSE1113R (English) ISRAEL/HONG KONG/KOREA/PUERTO RICO/TAIWAN:DRAFT		
MMNA/CANADA	2012 LANCER EVOLUTION SERVICE MANUAL	MSCD-206B-2012	FENDER REMOVAL AND INSTALLATION (M421-00-191-49100-01)	Attached sheet 3

3. Details:

See the attached sheets

Destinations: MMNA/EUR/G.EXP/GCC/CHINA/ISRAEL/HONG KONG/KOREA/MMAL/NZ/ BRUNEI/SINGAPORE/MALAYSIA/CANADA/PUERTO RICO/TAIWAN/INDIA

REMOVAL AND INSTALLATION

Pre-removal and post-installation operation
- Front splash shield removal and installation
- Side air dam removal and installation (Refer to GROUP 51 – Side Air Dams .)
- Front bumper side bracket removal and installation (Refer to GROUP 51 – Front Bumper Assembly, Radiator Grille .)
- Front delta garnish removal and installation (Refer to GROUP 51 – Garnish and Moulding .)
- Front deck garnish removal and installation (Refer to GROUP 51 – Windshield Wiper .)
- Headlamp assembly removal and installation (Refer to GROUP 54A – Headlamp .)
- Side turn-signal lamp removal and installation (Refer to GROUP 54A – Side Turn Signal Lamp .)

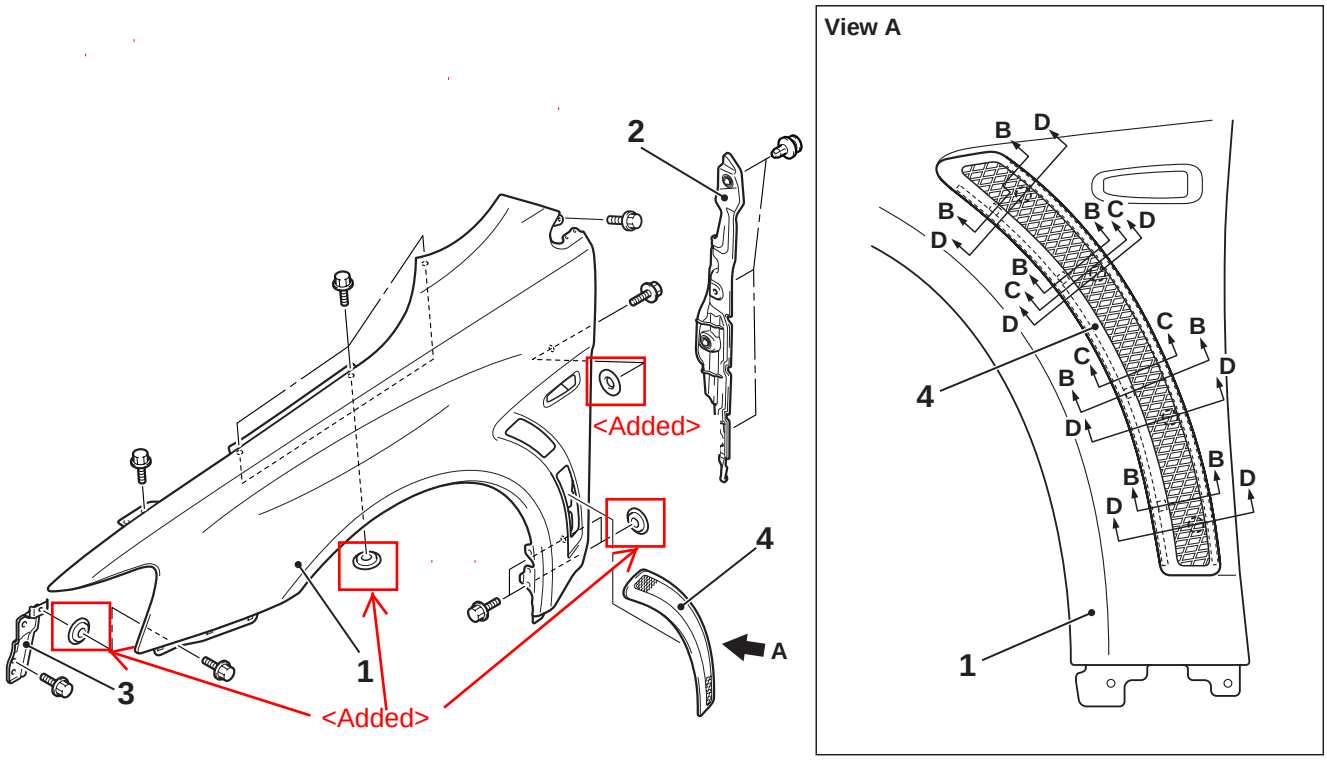

AC900040AB

Removal steps

<<A>> >>A<< 1. Fender
2. Fender protector rear

Removal steps

3. Front fender bracket
4. Front fender garnish

REMOVAL SERVICE POINT

<<A>> FENDER REMOVAL

1. Remove the fender protector rear assembling clip.

Attached sheet 3

FENDER

REMOVAL AND INSTALLATION

M1421001901491

Pre-removal and post-installation operation

- Front splash shield removal and installation
- Side air dam removal and installation (Refer to GROUP 51, Side Air Dam .)
- Front bumper bracket removal and installation (Refer to GROUP 51, Front Bumper Assembly and Radiator Grille .)
- Front delta garnish removal and installation (Refer to GROUP 51, Garnish and Molding .)
- Front deck garnish removal and installation (Refer to GROUP 51, Windshield Wiper .)
- Headlight assembly removal and installation (Refer to GROUP 54A, Headlight .)
- Side turn signal light removal and installation (Refer to GROUP 54A, Side Turn Signal Light .)

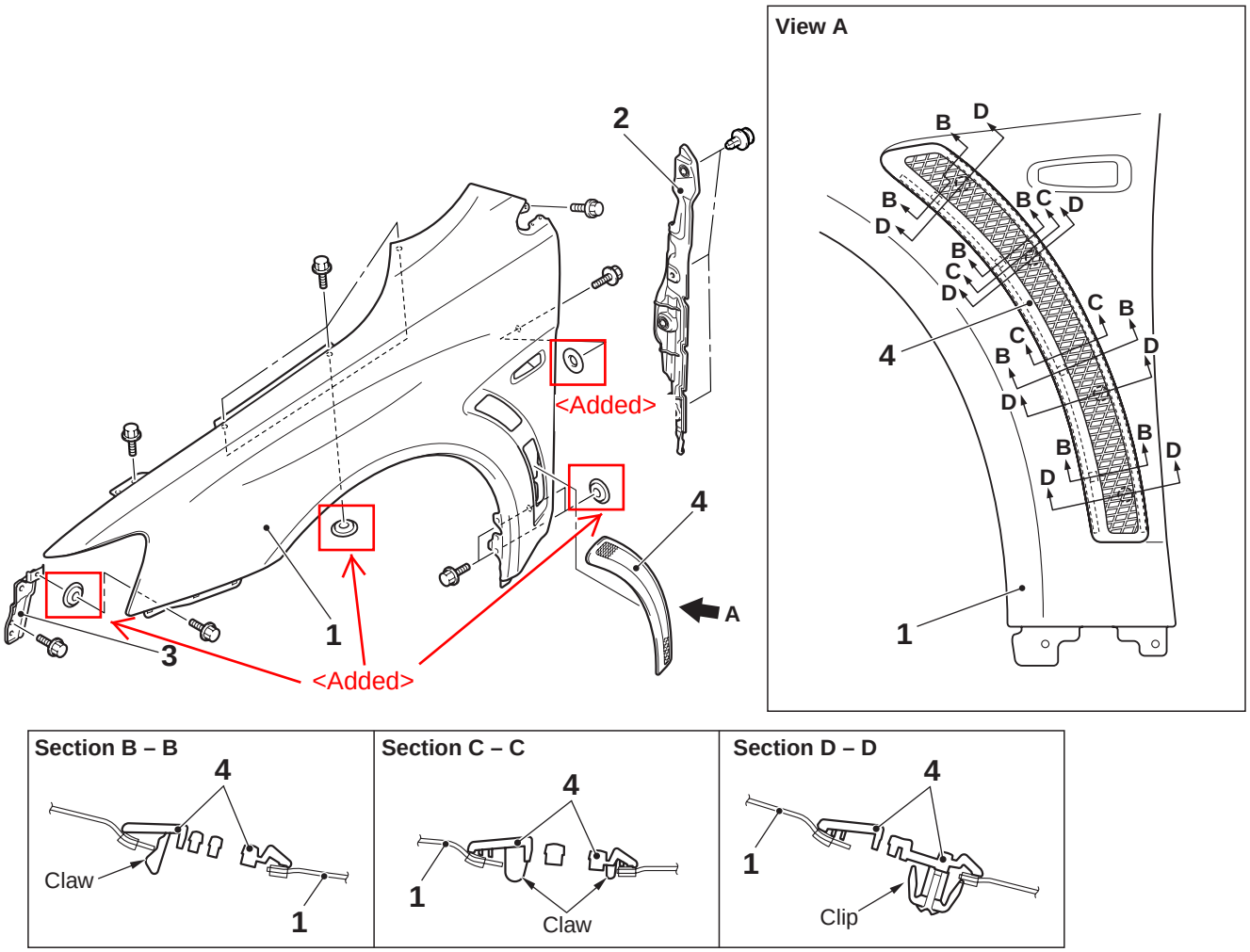

AC900040AC

Removal steps

<<A>> >>A<< 1. Fender
2. Fender protector rear
3. Front fender bracket
4. Front fender garnish

REMOVAL SERVICE POINT

<<A>> FENDER REMOVAL

1. Remove the fender protector rear assembling clip.