SERVICE BULLETIN

MITSUBISHI MOTORS

GLOBAL AFTER SALES OFFICE. MITSUBISHI MOTORS CORPORATION

PURPOSE : INFORMATION	ISSUE NO. : MSB-12EXML51-001	DATE : 2012-06-27	
SUBJECT : TAILGATE SPOILER SIDE GASKET		<Destination/Model> (AS SHOWN BELOW)	<M/Y> 11-13
GROUP : EXTERIOR		ASX/OUTLANDER SPORT(GA0W)	

1. Description:

See the attached sheets for the information about the change of mention in the applicable service manual.

2. Applicable manual:

See the attached sheets

3. Details:

See the attached sheets

※ Destinations : MMNA/USTP/KOREA/EUR/RUSSIA/SOUTH AFRICA/G.EXP/GCC/MMAL/NZ/ BRAZIL/HONG KONG/CHINA/INDONESIA

<MMNA/KOREA>

Applicable manual	Pub. No.	Applicable title (INFO-ID)	Contents
2011 OUTLANDER SPORT Service Manual CD-ROM	MSCD-017B-2011 KOREA:DRAFT	LIFTGATE SPOILER REMOVAL AND INSTALLATION (M511-01-990-60400-01)	Attached sheet 3
2012 OUTLANDER SPORT Service Manual CD-ROM	MSCD-017B-2012 KOREA:DRAFT		
2013 OUTLANDER SPORT Service Manual CD-ROM	MSCD-017B-2013 KOREA:DRAFT		

<EUR/RUSSIA/SOUTH AFRICA>

Applicable manual	Pub. No.	Applicable title (INFO-ID)	Contents
2011 ASX Workshop Manual CD-ROM	CGWE11E2-CD(Eng) CGWF11E2-CD(Fre) CGWG11E2-CD(Ger) CGWS11E2-CD CGWI11E2-CD RUSSIA:N/A SOUTH AFRIC	TAILGATE SPOILER REMOVAL AND INSTALLATION (M511-01-990-55201-01)	Attached sheet 4
2012 ASX Workshop Manual CD-ROM	CGWE12E2-CD CGWF12E2-CD CGWG12E2-CD CGWS12E2-CD CGWI12E2-CD(Ita) RUSSIA:N/A SOUTH AFRICA:DRAFT		
2013 ASX Workshop Manual CD-ROM	CGWE13E2-CD(Eng) CGWF13E2-CD(Fre) CGWG13E2-CD(Ger) CGWS13E2-CD(Spa) CGWI13E2-CD(Ita) RUSSIA:N/A SOUTH AFRICA:DRAFT		

M511-01-990-55201-01

<G.EXP/GCC/MMAL/NZ/BRAZIL/HONG KONG/CHINA/INDONESIA>

Applicable manual	Pub. No.	Applicable title (INFO-ID)	Contents
2011 ASX/OUTLANDER SPORT Workshop Manual CD-ROM	G.EXP/GCC PWPE1006R(Eng) PWPS1007R(Spa) MMAL/NZ/BRAZIL/ HONG KONG/CHINA/INDON ESIA/DRAFT	TAILGATE SPOILER REMOVAL AND INSTALLATION (M511-01-990-55201-01)	Attached sheet 4

LIFTGATE SPOILER

REMOVAL AND INSTALLATION

M1511019900604

Pre-removal and post-installation operation
- Liftgate upper trim removal and installation (Refer to GROUP 52A, Liftgate trim)
- Rear washer hose (Liftgate side) connector connection removal and installation (Refer to Rear wiper and washer).
- High-mount stop light connector connection removal and installation

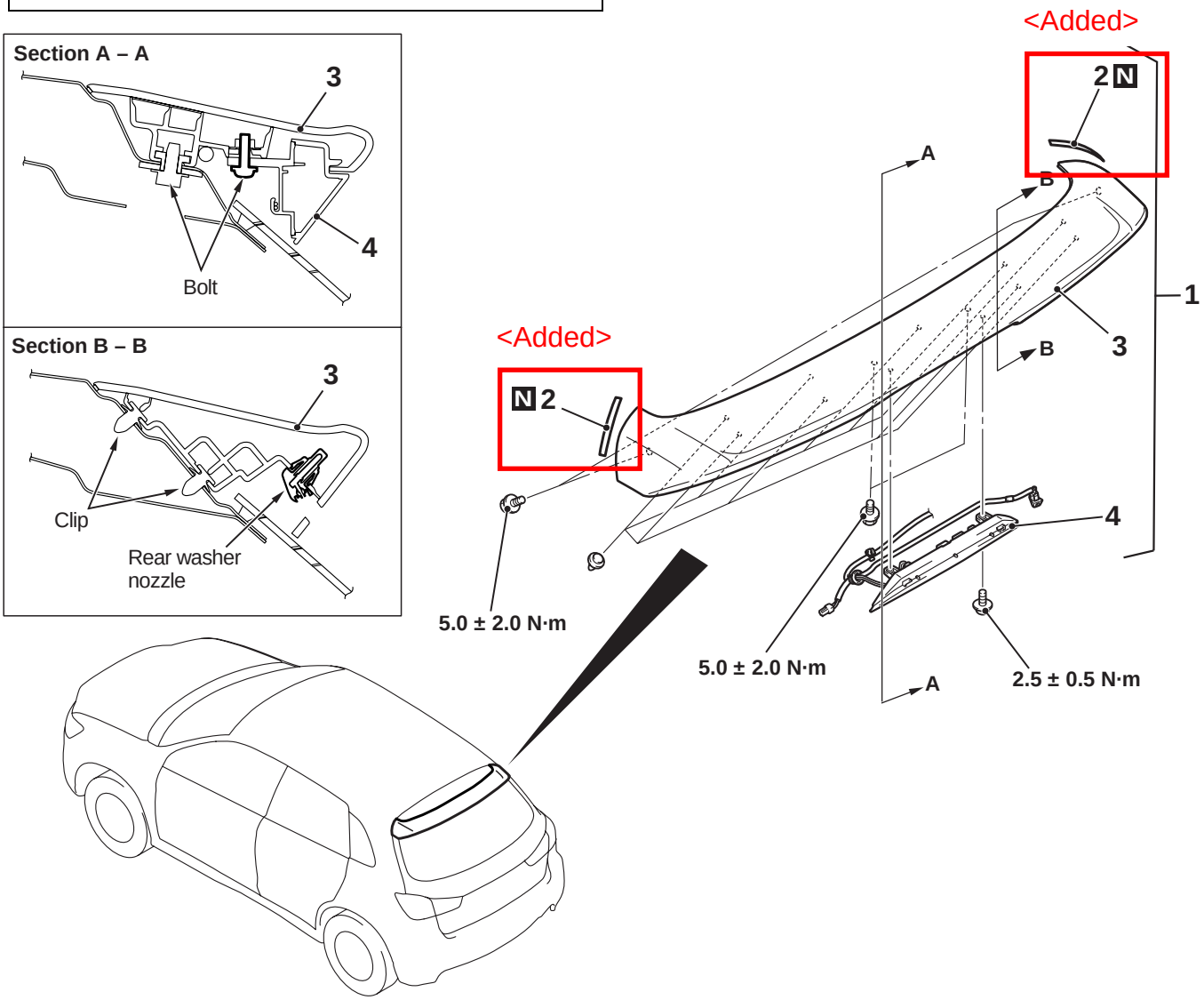

ACC03515AB

Removal steps

<Added> >>A<< 1. Liftgate spoiler assembly
2. Liftgate spoiler side gasket

Removal steps (Continued)

3. Liftgate spoiler
4. High-mount stop light assembly

<Added>

INSTALLATION SERVICE POINT

>>A<< LIFTGATE SPOILER SIDE GASKET INSTALLATION

1. Use a part cleaner to degrease the liftgate spoiler side gasket attaching surface at the liftgate spoiler assembly side.

⚠ CAUTION

- **The ambient temperature should be 20 to 38°C. Ensure that the working area is clean.**
- **If the ambient temperature is less than 20°C, heat the liftgate spoiler side gasket and the liftgate spoiler side gasket attaching surface at the liftgate spoiler assembly side up to 20 to 30°C.**

2. Pull off backing strips from the liftgate spoiler side gasket. If the base line is scribed adhere the liftgate spoiler side gasket along the base line on the liftgate spoiler assembly. If the base line is not scribed, adhere the gasket according to the dimensions below.

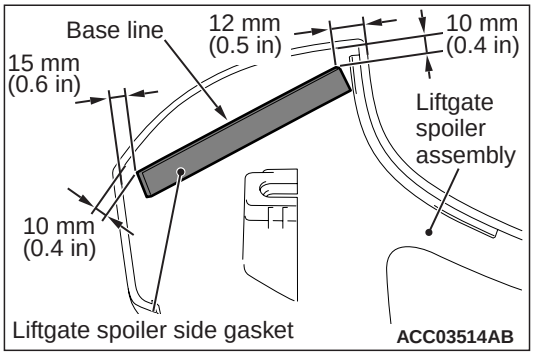

TAILGATE SPOILER

REMOVAL AND INSTALLATION

M1511019900552

Pre-removal and post-installation operation
- Tailgate upper trim removal and installation (Refer to GROUP 52A, Tailgate trim)
- Rear washer hose (tailgate side) connector connection removal and installation (Refer to Rear wiper and washer).
- High-mount stop lamp connector connection removal and installation

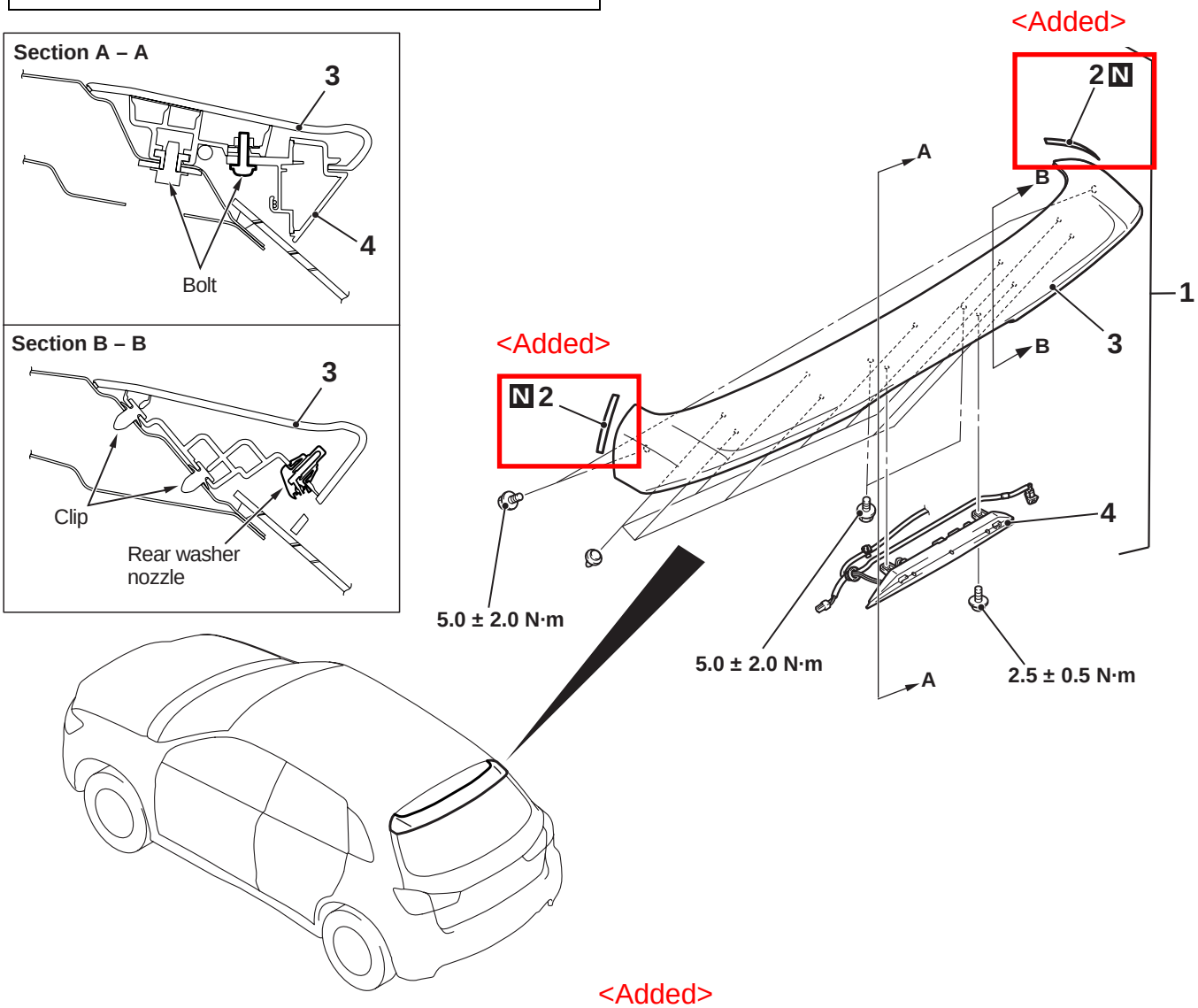

<Added>

ACC03515AB

Removal steps

<Added> >>A<< 2. Tailgate spoiler side gasket

1. Tailgate spoiler assembly
3. Tailgate spoiler
4. High-mount stop lamp assembly

INSTALLATION SERVICE POINT

>>A<< TAILGATE SPOILER SIDE GASKET INSTALLATION

1. Use a part cleaner to degrease the tailgate spoiler side gasket attaching surface at the tailgate spoiler assembly side.

<Added>

⚠ CAUTION

- **The ambient temperature should be 20 to 38°C. Ensure that the working area is clean.**
- **If the ambient temperature is less than 20°C, heat the tailgate spoiler side gasket and the tailgate spoiler side gasket attaching surface at the tailgate spoiler assembly side up to 20 to 30°C.**

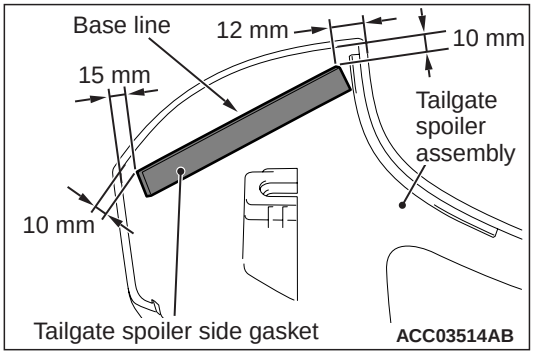

2. Pull off backing strips from the tailgate spoiler side gasket. If the base line is scribed adhere the tailgate spoiler side gasket along the base line on the tailgate spoiler assembly. If the base line is not scribed, adhere the gasket according to the dimensions below.