SERVICE BULLETIN

MITSUBISHI MOTORS

GLOBAL AFTER SALES OFFICE. MITSUBISHI MOTORS CORPORATION

PURPOSE : INFORMATION	ISSUE NO. : MSB-12EXML54-001	DATE : 2012-05-21
SUBJECT : TROUBLE SHOOTING OF ELECTRIC MOTOR UNIT		<Destination/Model> (MMNA/USTP/EUR/MMAL/NZ) HA3W <M/Y> 11-12
GROUP : CHASSIS ELECTRICAL		

1. Description:

See the attached sheets for the information about the change of mention in the current service manual..

2. Applicable manual:

See the attached sheets

3. Details:

See the attached sheets

FOR EU/MMAL/NZ

Applicable manual	Pub. No.	Applicable title (INFO ID)	Content
2011 i-MiEV Workshop Manual CD-ROM	CHAE11E1-CD (Eng) CHAF11E1-CD (Fra) CHAG11E1-CD (Ger) CHAI11E1-CD (Ita) CHAS11E1-CD (Spa)	CODE No.P0AA1: MAIN CONTACTOR (+)(SEIZURE) (M549-20-600-01100-01)	Attached sheet 16
		CODE No.P0AA4: MAIN CONTACTOR (-)(SEIZURE) (M549-20-610-02900-01)	Attached sheet 17
		CODE No.P0AE2: CHARGING CONTACTOR(SEIZURE) (M549-20-660-01300-01)	Attached sheet 18
		CODE No.P1A15: HIGH-VOLTAGE SYSTEM ERROR(1) (M549-20-920-01400-01)	Attached sheet 19
		CODE No.P1A16: HIGH-VOLTAGE SYSTEM ERROR(2) (M549-20-930-01100-01)	Attached sheet 20
		CODE No.P1A17: HIGH-VOLTAGE SYSTEM ERROR(3) (M549-20-940-01800-01)	Attached sheet 21
		CODE No.P1A26: CONDENSER DISCHARGE COMMAND OFF WAITING TIME-OUT(MCU) (M549-21-080-01000-01)	Attached sheet 22
		CODE No.P1AF2: MCU CONDENSER DISCHARGE COMMAND F/B (M549-21-340-01100-01)	Attached sheet 23

Applicable manual	Pub. No.	Applicable title (INFO ID)	Content
2012 i-MiEV Workshop Manual CD-ROM	CHAE12E1-CD (Eng) CHAF12E1-CD (Fra) CHAG12E1-CD (Ger) CHAI12E1-CD (Ita) CHAS12E1-CD (Spa)	CODE No.P0AA1: MAIN CONTACTOR (+)(SEIZURE) (M549-20-600-01101-01)	Attached sheet 16
		CODE No.P0AA4: MAIN CONTACTOR (-)(SEIZURE) (M549-20-610-02901-01)	Attached sheet 17
		CODE No.P0AE2: CHARGING CONTACTOR(SEIZURE) (M549-20-660-01301-01)	Attached sheet 18
		CODE No.P1A15: HIGH-VOLTAGE SYSTEM ERROR(1) (M549-20-920-01401-01)	Attached sheet 19
		CODE No.P1A16: HIGH-VOLTAGE SYSTEM ERROR(2) (M549-20-930-01101-01)	Attached sheet 20
		CODE No.P1A17: HIGH-VOLTAGE SYSTEM ERROR(3) (M549-20-940-01801-01)	Attached sheet 21
		CODE No.P1A26: CONDENSER DISCHARGE COMMAND OFF WAITING TIMEOUT(EMCU) (M549-21-080-01001-01)	Attached sheet 22
		CODE No.P1AF2: EMCU CONDENSER DISCHARGE COMMAND F/B (M549-21-340-01101-01)	Attached sheet 23

FOR MMNA

Applicable manual	Pub. No.	Applicable title (INFO ID)	Content
2012 i-MiEV Service Manual CD-ROM	MSCD-018B-2012	CODE No.P0AA1: MAIN CONTACTOR (+)(SEIZURE) (M549-20-600-01101-01)	Attached sheet 24
		CODE No.P0AA4: MAIN CONTACTOR (-)(SEIZURE) (M549-20-610-02901-01)	Attached sheet 25
		CODE No.P0AE2: CHARGING CONTACTOR(SEIZURE) (M549-20-660-01301-01)	Attached sheet 26
		CODE No.P1A15: HIGH-VOLTAGE SYSTEM ERROR(1) (M549-20-920-01401-01)	Attached sheet 27

		CODE No.P1A16: HIGH-VOLTAGE SYSTEM ERROR(2) (M549-20-930-01101-01)	Attached sheet 28
		CODE No.P1A17: HIGH-VOLTAGE SYSTEM ERROR(3) (M549-20-940-01801-01)	Attached sheet 29
		CODE No.P1A26: CONDENSER DISCHARGE COMMAND OFF WAITING TIMEOUT(EMCU) (M549-21-080-01001-01)	Attached sheet 30
		CODE No.P1AF2: EMCU CONDENSER DISCHARGE COMMAND F/B (M549-21-340-01101-01)	Attached sheet 31

Replace with attached sheets 16 (7/11—11/11)

<New>

11 MODEL

Attached sheet 16 (1/11)

<Old>

Code No. P0AA1: Main contactor (+) (seizure)

HIGH VOLTAGE POWER SUPPLY CONTROL SYSTEM CIRCUIT

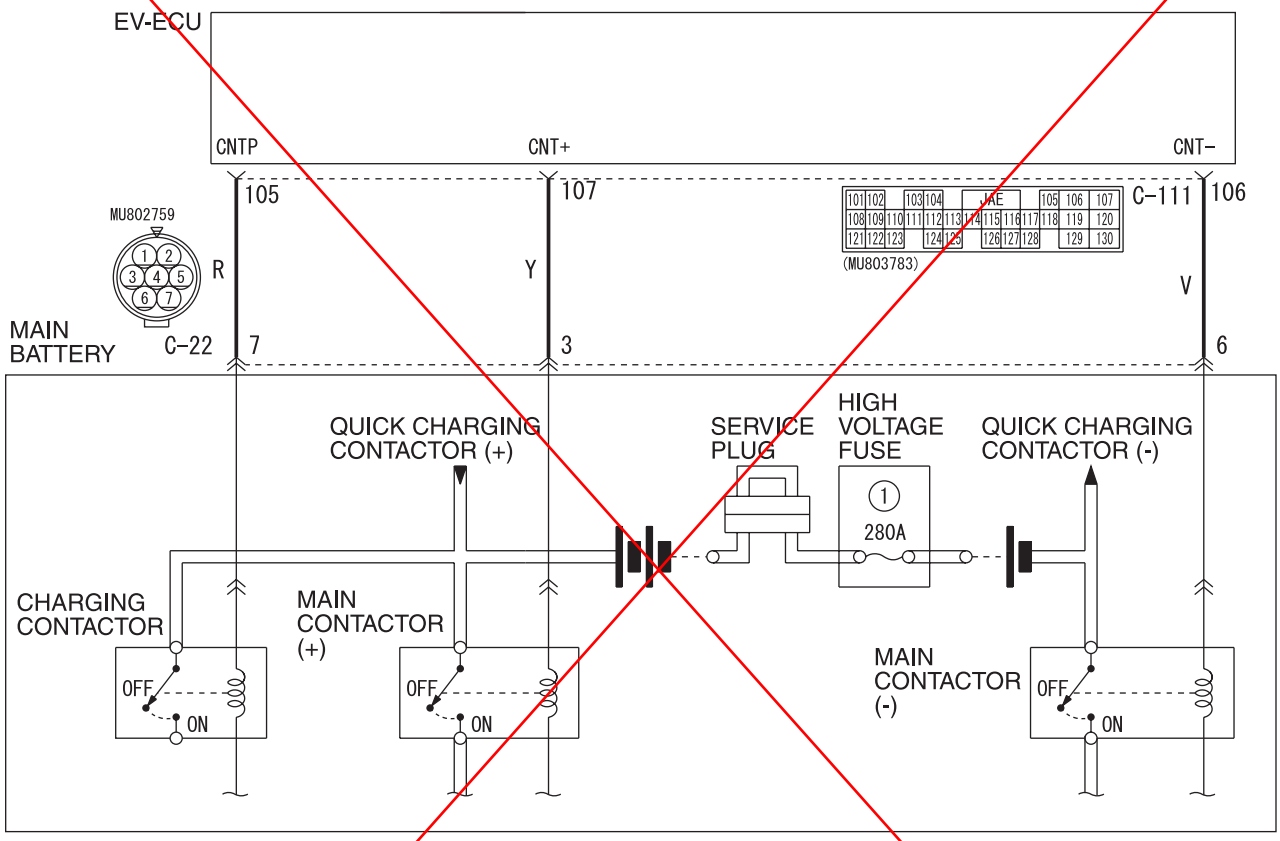

Wire colour code
B : Black LG : Light green G : Green L : Blue W : White Y : Yellow SB : Sky blue
BR : Brown O : Orange GR : Grey R : Red P : Pink V : Violet PU : Purple SI : Silver

ACA03485

Connector: C-22

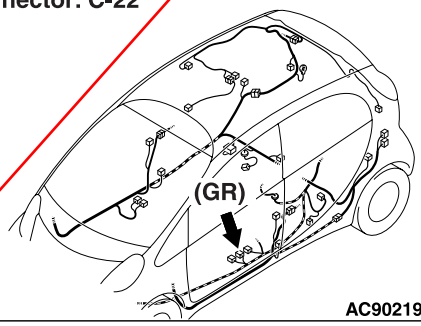

AC902191AO

Connector: C-111

Rear floor lower part

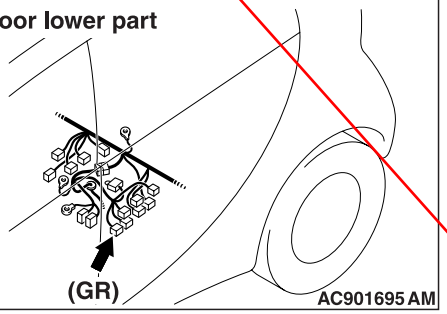

AC901695AM

⚠ DANGER

- ***When servicing the high voltage system parts, always shut off the high voltage by removing the service plug (refer to).***
- ***When servicing the high voltage system parts, always wear the protective equipment or armour to measure the high voltage (refer to).***

⚠ CAUTION

If there is any problem in the CAN bus lines, an incorrect diagnosis code may be set. Prior to this diagnosis, always diagnose the CAN bus lines.

OPERATION

- The smooth condenser in the MCU is controlled by the EV-ECU, connects and shuts down the high-voltage circuit via the main contactor (+) and (–) in the main battery.

DIAGNOSIS CODE SET CONDITIONS

- If a seizure of the main contactor (+) is determined when the high-voltage circuit is shut down, the diagnosis code No. P0AA1 will be set.

PROBABLE CAUSES

- Damaged wiring harness or connector(s)
- Seizure of the charging contactor
- Malfunction of the main battery
- Malfunction of the EV-ECU

DIAGNOSIS PROCEDURE

STEP 1. M.U.T.-III CAN bus diagnosis

Use the M.U.T.-III to diagnose the CAN bus lines.

Q: Is the check result normal?
YES : Go to Step 3.
NO : Repair the CAN bus line. (Refer to GROUP 54C – Troubleshooting .) Then go to Step 2.

STEP 2. Diagnosis code recheck after resetting CAN bus lines

Check again if the diagnosis code No. P0AA1 is set to the EV-ECU.
(1) Erase the stored diagnosis code.
(2) Set the electric motor switch from the "LOCK" (OFF) position to the "ON" position.
(3) Check if the diagnosis code is set.

Q: Is the diagnosis code set?
YES : Go to Step 3.
NO : This diagnosis is complete.

STEP 3. Connector check: C-22 main battery connector, C-111 EV-ECU connector

Q: Is the check result normal?
YES : Go to Step 4.
NO : Repair the damaged connector.

STEP 4. Check the wiring harness between C-111 EV-ECU connector terminal No. 106, 107 and C-22 main battery connector terminal No. 3, 6.

Check the signal lines for short to power supply.

Q: Is the check result normal?
YES : Go to Step 5.
NO : Repair the wiring harness.

STEP 5. Voltage measurement at G-19 high-voltage connector, service plug

⚠ DANGER

When servicing the high voltage system parts, always wear the protective equipment or armour to measure the high voltage (refer to).

⚠ DANGER

Be sure to wear the specified protective equipment when removing the service plug.

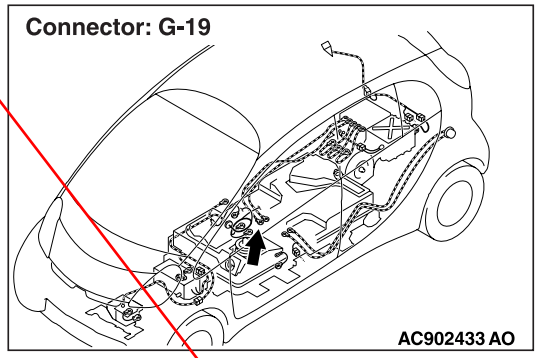

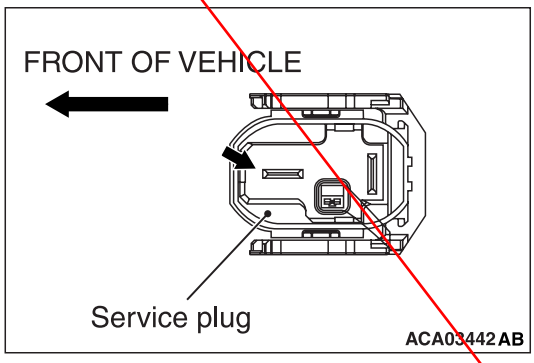

(1) Using a high voltage multimeter, measure the high voltage between the G-19 connection terminal and service plug forward terminal.

OK: 0 V

Q: Is the check result normal?

YES : Go to Step 6.
NO : Go to Step 7.

STEP 6. Diagnosis code recheck
Check again if the diagnosis code is set to the EV-ECU.
(1) Erase the stored diagnosis code.
(2) Set the electric motor switch from the "LOCK" (OFF) position to the "ON", and then to the "START" position temporarily.
(3) Check if the diagnosis code is set.

Q: Is the diagnosis code set?
YES : Replace the EV-ECU. (Refer to .) Then go to Step 7.
NO : Intermittent malfunction (Refer to GROUP 00 – How to Use Troubleshooting/ Inspection Service Points - How to Cope with Intermittent Malfunction .)

STEP 7. Diagnosis code recheck
Check again if the diagnosis code is set to the EV-ECU.
(1) Erase the stored diagnosis code.
(2) Set the electric motor switch from the "LOCK" (OFF) position to the "ON", and then to the "START" position temporarily.
(3) Check if the diagnosis code is set.

Q: Is the diagnosis code set?
YES : Replace the main battery. (Refer to .) Then go to Step 8.
NO : The diagnosis is complete.

STEP 8. Diagnosis code recheck
Check again if the diagnosis code is set to the EV-ECU.
(1) Erase the stored diagnosis code.
(2) Set the electric motor switch from the "LOCK" (OFF) position to the "ON", and then to the "START" position temporarily.
(3) Check if the diagnosis code is set.

Q: Is the diagnosis code set?
YES : Return to Step 1.
NO : The diagnosis is complete.

Replace with attached sheets 16 (7/11—11/11)

<New>

12 MODEL

Attached sheet 16 (4/11)

<Old>

Code No. P0AA1: Main contactor (+) (seizure)

HIGH VOLTAGE POWER SUPPLY CONTROL SYSTEM CIRCUIT

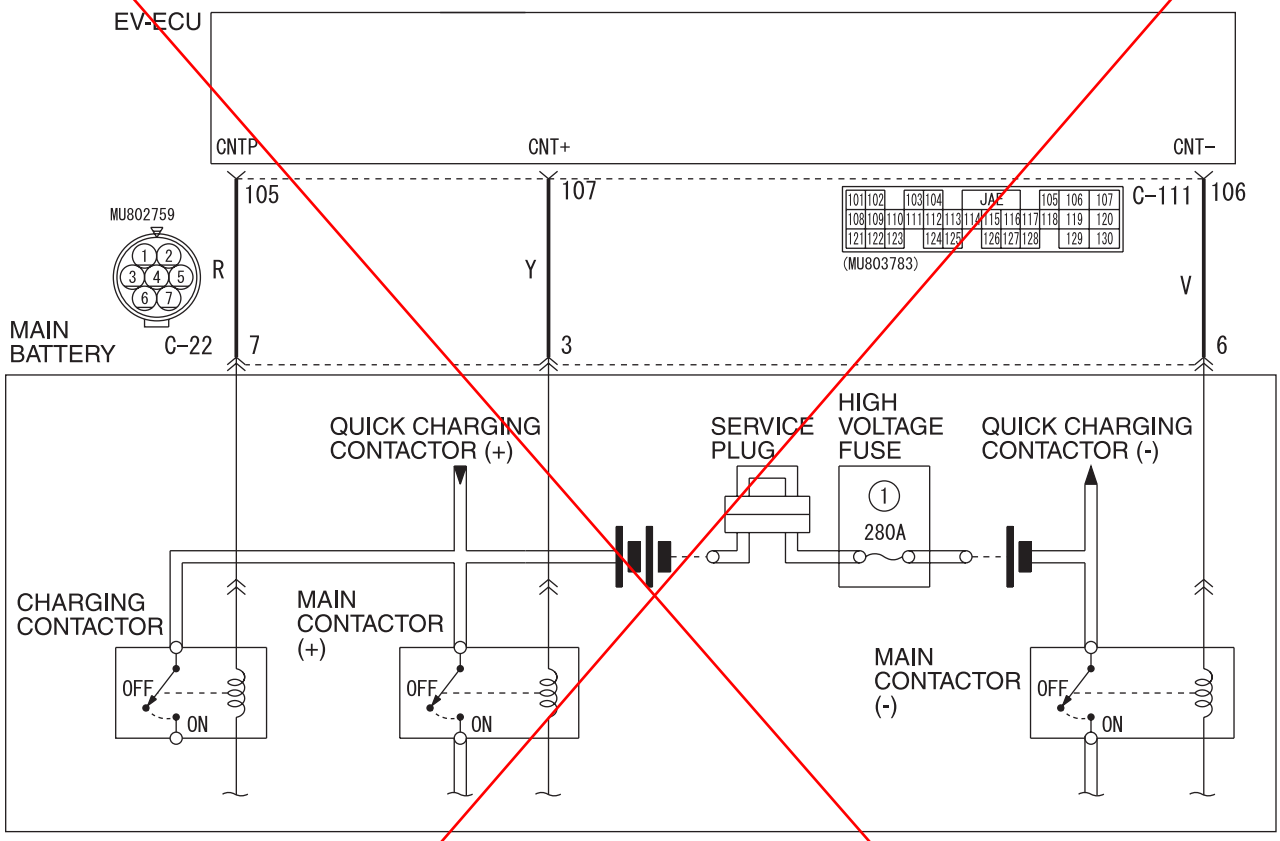

Wire colour code
B : Black LG : Light green G : Green L : Blue W : White Y : Yellow SB : Sky blue
BR : Brown O : Orange GR : Grey R : Red P : Pink V : Violet PU : Purple SI : Silver

ACA03485

Connector: C-22

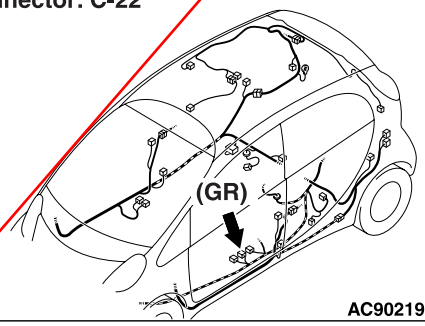

AC902191AO

Connector: C-111
Rear floor lower part

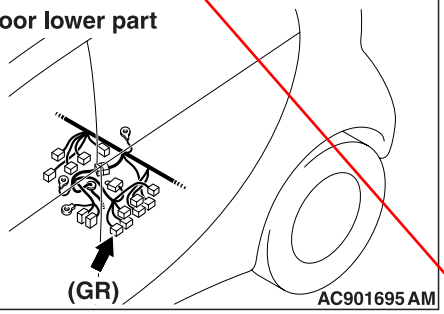

AC901695AM

⚠ DANGER

- ***When servicing the high voltage system parts, always shut off the high voltage by removing the service plug (refer to).***
- ***When servicing the high voltage system parts, always wear the protective equipment or armour to measure the high voltage (refer to).***

⚠ CAUTION

If there is any problem in the CAN bus lines, an incorrect diagnosis code may be set. Prior to this diagnosis, always diagnose the CAN bus lines.

OPERATION

- The smooth condenser in the EMCU is controlled by the EV-ECU, connects and shuts down the high-voltage circuit via the main contactor (+) and (–) in the main battery.

DIAGNOSIS CODE SET CONDITIONS

- If a seizure of the main contactor (+) is determined when the high-voltage circuit is shut down, the diagnosis code No. P0AA1 will be set.

PROBABLE CAUSES

- Damaged wiring harness or connector(s)
- Seizure of the charging contactor
- Malfunction of the main battery
- Malfunction of the EV-ECU

DIAGNOSIS PROCEDURE

STEP 1. M.U.T.-III CAN bus diagnosis

Use the M.U.T.-III to diagnose the CAN bus lines.

Q: Is the check result normal?
YES : Go to Step 3.
NO : Repair the CAN bus line. (Refer to GROUP 54C – Troubleshooting .) Then go to Step 2.

STEP 2. Diagnosis code recheck after resetting CAN bus lines

Check again if the diagnosis code No. P0AA1 is set to the EV-ECU.
(1) Erase the stored diagnosis code.
(2) Set the electric motor switch from the "LOCK" (OFF) position to the "ON", and then to the "START" position temporarily.
(3) Reset the electric motor switch from the "LOCK" (OFF) position to the "ON" position.
(4) Check if the diagnosis code is set.

Q: Is the diagnosis code set?
YES : Go to Step 3.
NO : This diagnosis is complete.

STEP 3. Connector check: C-22 main battery connector, C-111 EV-ECU connector

Q: Is the check result normal?
YES : Go to Step 4.
NO : Repair the damaged connector.

STEP 4. Check the wiring harness between C-111 EV-ECU connector terminal No. 106, 107 and C-22 main battery connector terminal No. 3, 6.

Check the signal lines for short to power supply.

Q: Is the check result normal?
YES : Go to Step 5.
NO : Repair the wiring harness.

STEP 5. Voltage measurement at G-19 high-voltage, service plug connector

⚠ DANGER

When servicing the high voltage system parts, always wear the protective equipment or armour to measure the high voltage (refer to).

⚠ DANGER

Be sure to wear the specified protective equipment when removing the service plug.

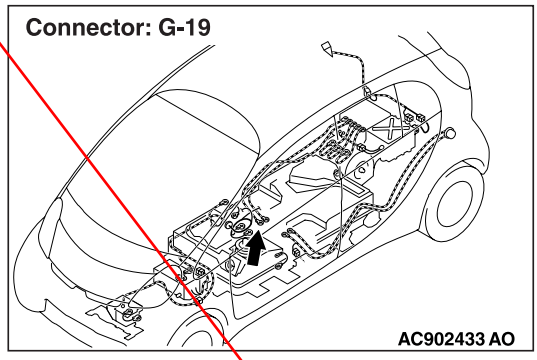

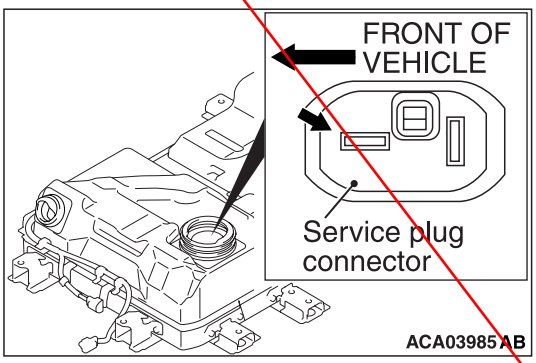

(1) Using a high voltage multimeter, measure the high voltage between the G-19 connection terminal and service plug connection forward

terminal.

OK: 0 V

Q: Is the check result normal?
YES : Go to Step 6.
NO : Go to Step 7.

STEP 6. Diagnosis code recheck
Check again if the diagnosis code is set to the EV-ECU.
(1) Erase the stored diagnosis code.
(2) Set the electric motor switch from the "LOCK" (OFF) position to the "ON", and then to the "START" position temporarily.
(3) Reset the electric motor switch from the "LOCK" (OFF) position to the "ON" position.
(4) Check if the diagnosis code is set.

Q: Is the diagnosis code set?
YES : Replace the EV-ECU. (Refer to .) Then go to Step 7.
NO : Intermittent malfunction (Refer to GROUP 00 – How to Use Troubleshooting/ Inspection Service Points - How to Cope with Intermittent Malfunction .)

STEP 7. Diagnosis code recheck
Check again if the diagnosis code is set to the EV-ECU.
(1) Erase the stored diagnosis code.
(2) Set the electric motor switch from the "LOCK" (OFF) position to the "ON", and then to the "START" position temporarily.
(3) Reset the electric motor switch from the "LOCK" (OFF) position to the "ON" position.
(4) Check if the diagnosis code is set.

Q: Is the diagnosis code set?
YES : Replace the main battery. (Refer to .) Then go to Step 8.
NO : The diagnosis is complete.

STEP 8. Diagnosis code recheck
Check again if the diagnosis code is set to the EV-ECU.
(1) Erase the stored diagnosis code.
(2) Set the electric motor switch from the "LOCK" (OFF) position to the "ON", and then to the "START" position temporarily.
(3) Reset the electric motor switch from the "LOCK" (OFF) position to the "ON" position.
(4) Check if the diagnosis code is set.

Q: Is the diagnosis code set?
YES : Return to Step 1.
NO : The diagnosis is complete.

To Attached sheet 16 (1/11－6/11)

Attached sheet 16 (7/11)

Code No. P0AA1: Main contactor (+) (seizure)

HIGH VOLTAGE POWER SUPPLY CONTROL SYSTEM CIRCUIT

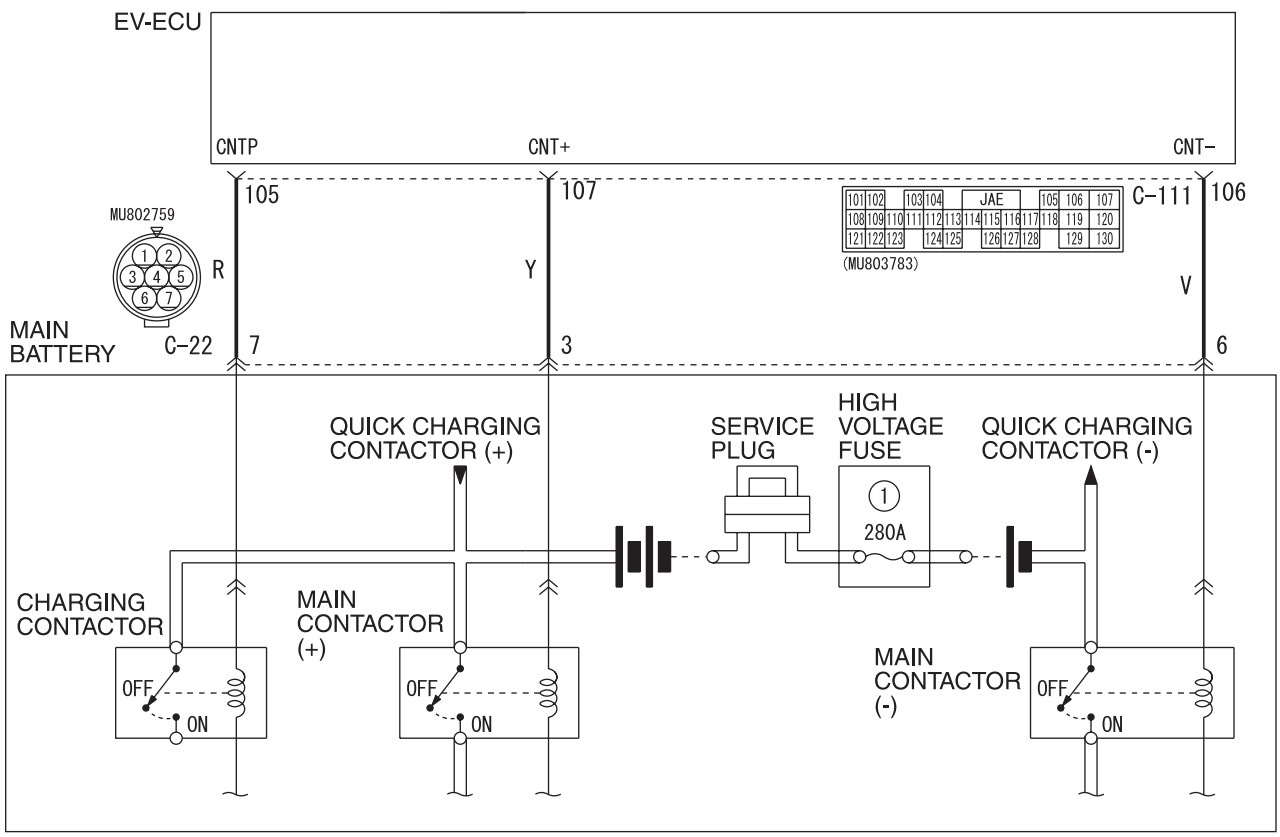

Wire colour code
B : Black LG : Light green G : Green L : Blue W : White Y : Yellow SB : Sky blue
BR : Brown O : Orange GR : Grey R : Red P : Pink V : Violet PU : Purple SI : Silver

ACA03485

To Attached sheet 16
(1/11－6/11)

A/C Control Circuit

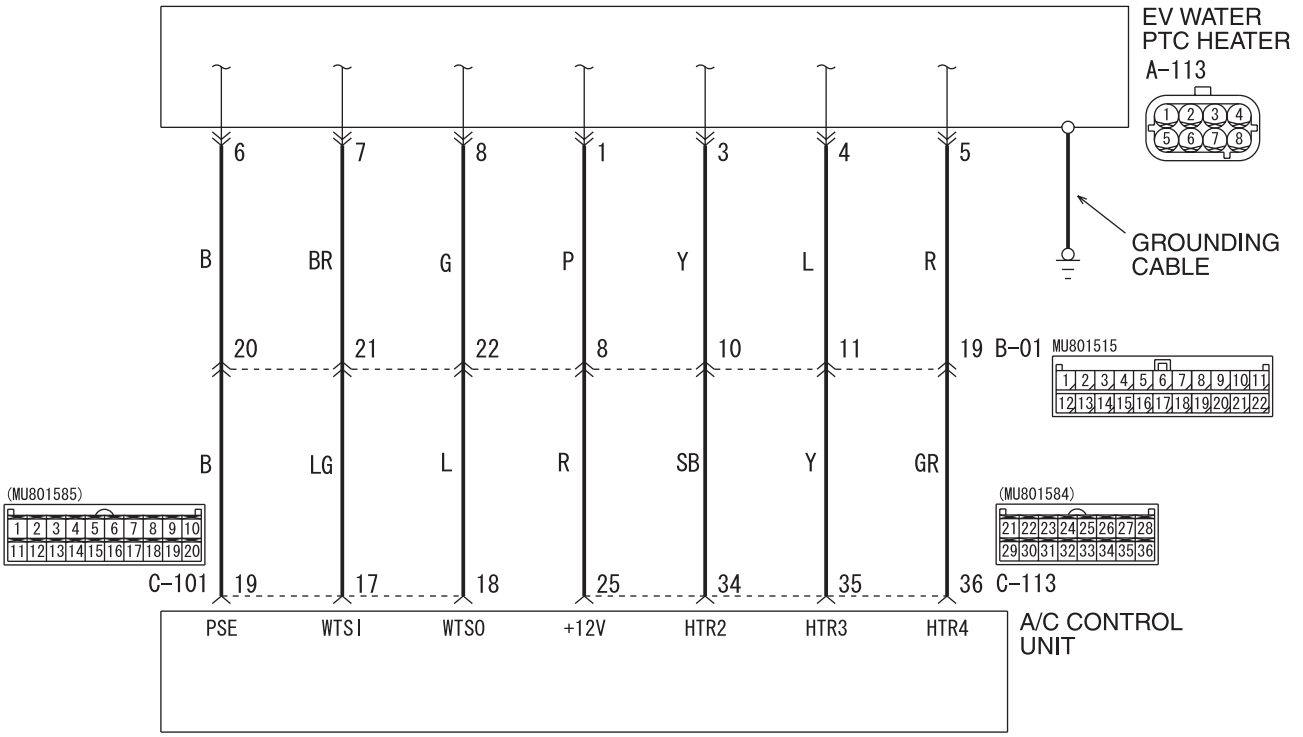

ACC00326
WDT55M008A

Connector: A-113 <LHD>

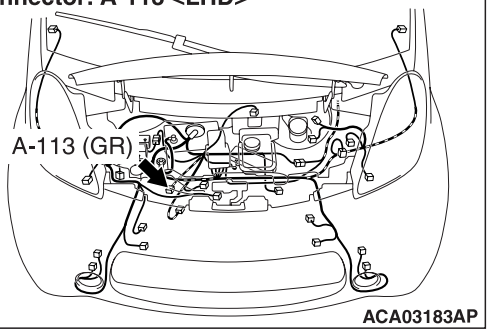

ACA03183AP

Connector: C-22

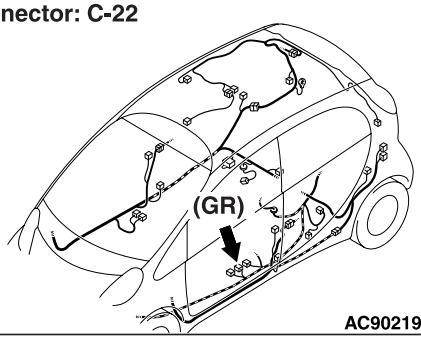

AC902191AO

Connector: A-113 <RHD>

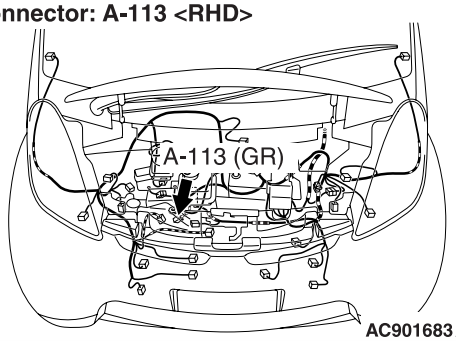

AC901683AV

Connector: C-111, C-113
Rear floor lower part

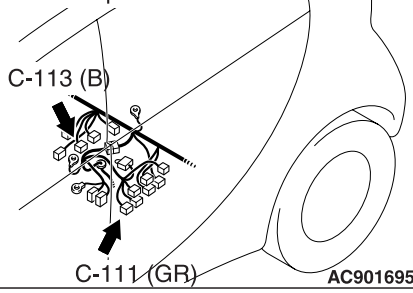

AC901695BH

To Attached sheet 16 (1/11－6/11)

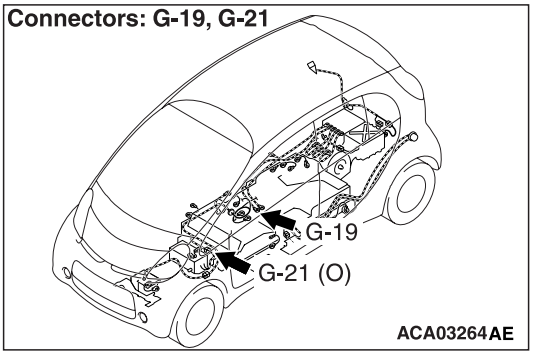

⚠ *DANGER*

- ***When servicing the high voltage system parts, always shut off the high voltage by removing the service plug (refer to).***
- ***When servicing the high voltage system parts, always wear the protective equipment or armour to measure the high voltage (refer to).***

⚠ CAUTION

If there is any problem in the CAN bus lines, an incorrect diagnosis code may be set. Prior to this diagnosis, always diagnose the CAN bus lines (Refer to GROUP 54C – CAN Bus Diagnostics Table).

OPERATION

- The main contactors (+) and (-) the charging contactor inside the main battery, which are controlled by the EV-ECU, activate and deactivate the high-voltage circuit. The EV-ECU monitors the voltage in the smoothing condenser in the EMCU.

DIAGNOSIS CODE SET CONDITIONS

- If a seizure of the main contactor (+) or charging contactor is determined when the high-voltage circuit is shut down, the diagnosis code No. P0AA1 will be set.

NOTE: This diagnosis code is stored as a current trouble only. Therefore, follow the troubleshooting steps for the current trouble.

PROBABLE CAUSES

- Damaged wiring harness or connector(s)
- Malfunction of the main battery assembly
- Malfunction of the EV-ECU
- Malfunction of the EV water PTC heater
- Malfunction of the A/C control unit
- Malfunction of the onboard charger/DC-DC converter
- Malfunction of the EMCU
- Malfunction of the A/C compressor

DIAGNOSIS PROCEDURE

STEP 1. M.U.T.-III CAN bus diagnosis

Use the M.U.T.-III to diagnose the CAN bus lines.

Q: Is the check result normal?
YES : Go to Step 3.
NO : Repair the CAN bus line. (Refer to GROUP 54C – Troubleshooting .) Then go to Step 2.

STEP 2. Diagnosis code recheck after resetting CAN bus lines

Check again if the diagnosis code No. P0AE2 is set to the EV-ECU.
(1) Erase the stored diagnosis code.
(2) Set the electric motor switch from the "LOCK" (OFF) position to the "ON", and then to the "START" position temporarily.
(3) After the electric motor switch from the "LOCK" (OFF) position, reset the electric motor switch from the "LOCK" (OFF) position to the "ON" position.
(4) Check if the diagnosis code is set.

Q: Is the diagnosis code set?
YES : Go to Step 3.
NO : This diagnosis is complete.

STEP 3. Connector check: C-22 main battery connector, C-111 EV-ECU connector

Q: Is the check result normal?
YES : Go to Step 4.
NO : Repair the damaged connector.

STEP 4. Check the wiring harness between C-111 EV-ECU connector terminal No. 107 and C-22 main battery connector terminal No. 3.

Check the signal lines for short to power supply.

Q: Is the check result normal?
YES : Go to Step 5.
NO : Repair the wiring harness.

STEP 5. Voltage measurement at G-19 high-voltage, service plug connector

⚠ ***DANGER***

Carry out the check on the high-voltage circuit while reading carefully the precautions on handling a high-voltage vehicle.

⚠ ***DANGER***

Be sure to wear the specified protective equipment when removing the service plug.

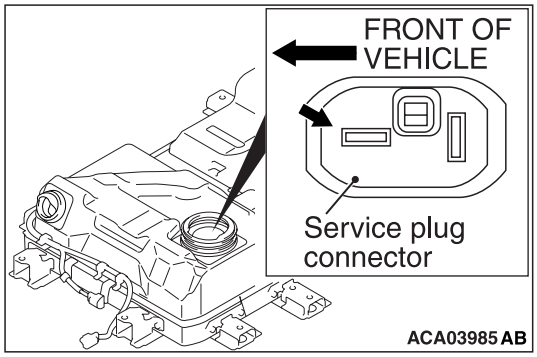

(1) Using a high voltage multimeter, measure the high voltage between the G-19 connection terminal and service plug connection forward terminal.

OK: 0 V

Q: Is the check result normal?
YES : Go to Step 6.
NO : Go to Step 14.

STEP 6. Use M.U.T.-III diagnosis code of other.

Check if the diagnosis code except No. P1A16 or P1A26 is set to the EV-ECU.

Q: Is the diagnosis code set?
YES : Carry out troubleshooting for the diagnosis code.
NO : Go to Step 7.

STEP 7. Use M.U.T.-III diagnosis code of other systems.

Check if the diagnosis code is set to the A/C control unit.

Q: Is the diagnosis code set?
YES : Carry out troubleshooting for the diagnosis code.
NO : Go to Step 8.

STEP 8. Measure the resistance of the G-21 EV water PTC heater connector.

⚠ ***DANGER***

Carry out the check on the high-voltage circuit while reading carefully the precautions on handling a high-voltage vehicle.

⚠ ***DANGER***

Wear the specified protection equipment during the check.

(1) Remove the service plug.
(2) Disconnect the EV water PTC heater connector.
(3) Measure it on the resistance at the EV water PTC heater side.
(4) Measure the resistance between the G-21 EV water PTC heater connector terminal No.1 and No.2.

OK: 1 MΩ or more

Q: Is the check result normal?
YES : Go to Step 9.
NO : Check the high-voltage fuse No.3 (Refer to). Replace the EV water PTC heater (Refer to GROUP 55 - EV Water PTC Heater).

STEP 9. Measure the resistance at A-113 EV water PTC heater connector.

(1) Disconnect the A-113 EV water PTC heater connector and measure it on the resistance at the EV water PTC heater side.
(2) Measure the resistance between the A-113 EV water PTC heater connector terminal No. 3, 4, 5 and the body earth.

OK: No continuity

Q: Is the check result normal?
YES : Go to Step 10.
NO : Replace the EV water PTC heater (Refer to GROUP 55 - EV Water PTC Heater).

STEP 10. Measure the resistance at A-113 EV water PTC heater connector.

(1) Disconnect the A-113 EV water PTC heater connector and measure it on the resistance at the wiring harness side.
(2) Measure the resistance between the A-113 EV water PTC heater connector terminal No. 3, 4, 5 and the body earth.

OK: No continuity

Q: Is the check result normal?
YES : Go to Step 13.
NO : Go to Step 11.

STEP 11. Connector check: A-113 EV water PTC heater connector, B-01 joint connector, C-113 A/C control unit connector.

Q: Is the check result normal?
YES : Go to Step 12.
NO : Repair the damaged connector.

STEP 12. Check the wiring harness between A-113 EV water PTC heater connector terminal No. 3, 4, 5 and C-113 A/C control unit connector terminal No. 34, 35, 36.
Check the signal line for short circuit.

Q: Is the check result normal?
YES : Replace the A/C control unit (Refer to GROUP 55 - A/C Control Unit).
NO : Repair the wiring harness.

STEP 13. Diagnosis code recheck
Check again if the diagnosis code is set to the EV-ECU.
(1) Erase the stored diagnosis code.
(2) Set the electric motor switch from the "LOCK" (OFF) position to the "ON", and then to the "START" position temporarily.
(3) After the electric motor switch from the "LOCK" (OFF) position, reset the electric motor switch from the "LOCK" (OFF) position to the "ON" position.
(4) Check if the diagnosis code is set.

Q: Is the diagnosis code set?
YES : Replace the EV-ECU (Refer to). Then go to Step 14.
NO : Intermittent malfunction (Refer to GROUP 00 – How to Use Troubleshooting/ Inspection Service Points - How to Cope with Intermittent Malfunction)

STEP 14. Diagnosis code recheck
Check again if the diagnosis code is set to the EV-ECU.
(1) Erase the stored diagnosis code.
(2) Set the electric motor switch from the "LOCK" (OFF) position to the "ON", and then to the "START" position temporarily.
(3) After the electric motor switch from the "LOCK" (OFF) position, reset the electric motor switch from the "LOCK" (OFF) position to the "ON" position.
(4) Check if the diagnosis code is set.

Q: Is the diagnosis code set?
YES : Replace the main battery assembly (Refer to) Then go to Step 15.
NO : The diagnosis is complete.

STEP 15. Diagnosis code recheck
Check again if the diagnosis code is set to the EV-ECU.
(1) Erase the stored diagnosis code.
(2) Set the electric motor switch from the "LOCK" (OFF) position to the "ON", and then to the "START" position temporarily.
(3) After the electric motor switch from the "LOCK" (OFF) position, reset the electric motor switch from the "LOCK" (OFF) position to the "ON" position.
(4) Check if the diagnosis code is set.

Q: Is the diagnosis code set?
YES : Return to Step 1.
NO : The diagnosis is complete.

Replace with attached sheets 17 (7/11—11/11)

<New>

11 MODEL

Attached sheet 17 (1/11)

<Old>

Code No. P0AA4: Main contactor (–) (seizure)

HIGH VOLTAGE POWER SUPPLY CONTROL SYSTEM CIRCUIT

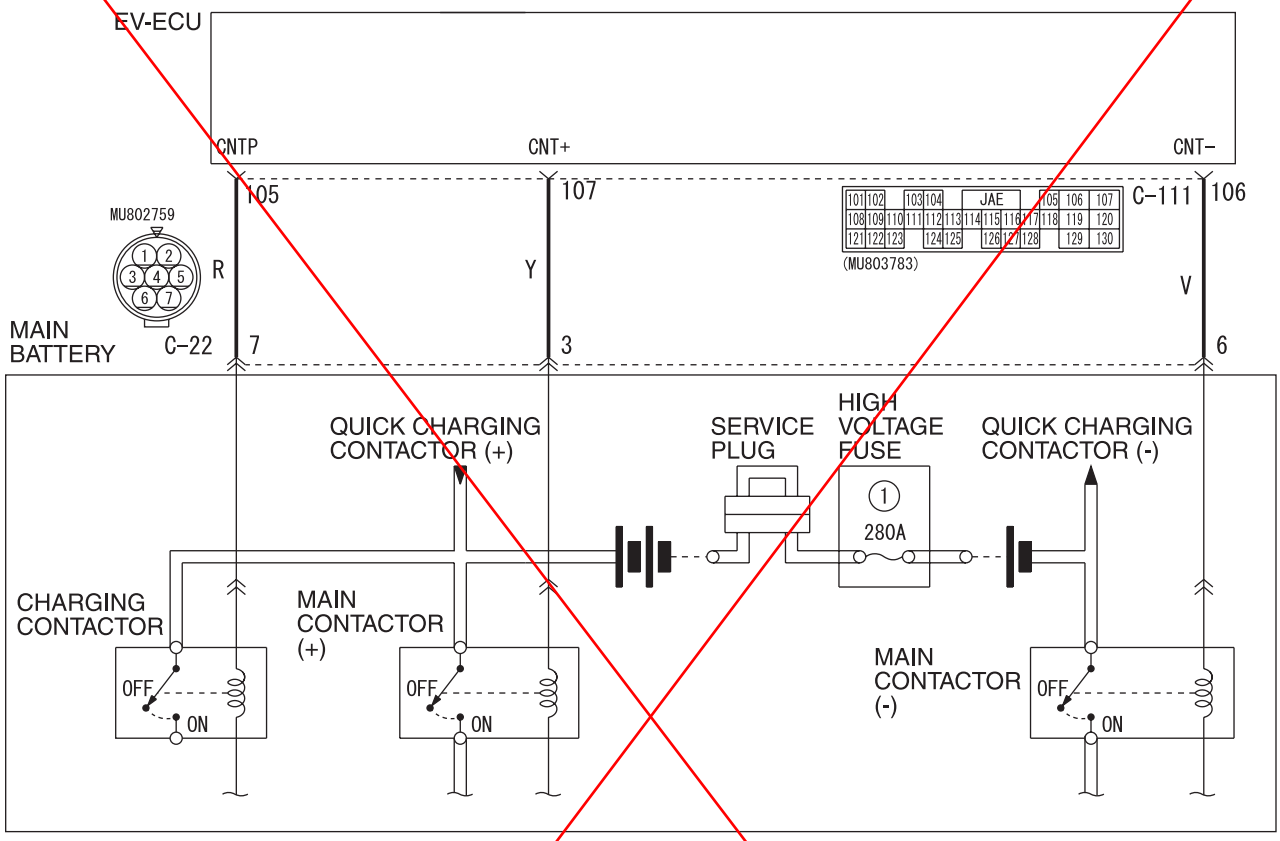

Wire colour code
B : Black LG : Light green G : Green L : Blue W : White Y : Yellow SB : Sky blue
BR : Brown O : Orange GR : Grey R : Red P : Pink V : Violet PU : Purple SI : Silver

ACA03485

Connector: C-22

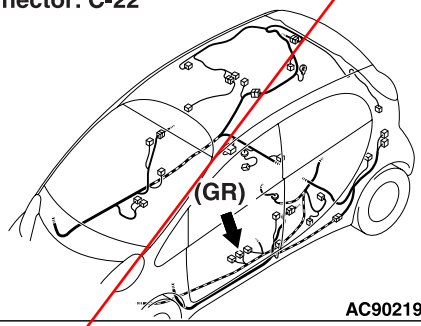

AC902191AO

Connector: C-111
Rear floor lower part

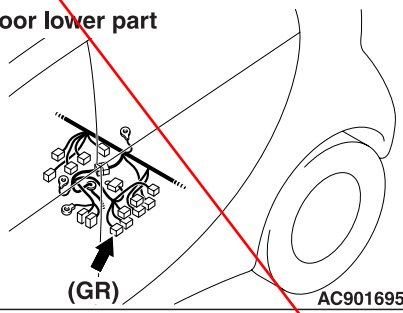

AC901695AM

⚠ DANGER

- ***When servicing the high voltage system parts, always shut off the high voltage by removing the service plug (refer to).***
- ***When servicing the high voltage system parts, always wear the protective equipment or armour to measure the high voltage (refer to).***

⚠ CAUTION

If there is any problem in the CAN bus lines, an incorrect diagnosis code may be set. Prior to this diagnosis, always diagnose the CAN bus lines.

OPERATION

- The smooth condenser in the MCU is controlled by the EV-ECU, connects and shuts down the high-voltage circuit via the main contactor (+) and (–) in the main battery.

DIAGNOSIS CODE SET CONDITIONS

- If a seizure of the main contactor (–) is determined when the high-voltage circuit is activated, the diagnosis code No. P0AA4 will be set.

PROBABLE CAUSES

- Damaged wiring harness or connector(s)
- Malfunction of the main battery
- Malfunction of the EV-ECU

DIAGNOSIS PROCEDURE

STEP 1. M.U.T.-III CAN bus diagnosis

Use the M.U.T.-III to diagnose the CAN bus lines.

Q: Is the check result normal?
YES : Go to Step 3.
NO : Repair the CAN bus line. (Refer to GROUP 54C – Troubleshooting .) Then go to Step 2.

STEP 2. Diagnosis code recheck after resetting CAN bus lines

Check again if the diagnosis code No. P0AA4 is set to the EV-ECU.
(1) Erase the stored diagnosis code.
(2) Set the electric motor switch from the "LOCK" (OFF) position to the "ON" position.
(3) Check if the diagnosis code is set.

Q: Is the diagnosis code set?
YES : Go to Step 3.
NO : This diagnosis is complete.

STEP 3. Connector check: C-22 main battery connector, C-111 EV-ECU connector

Q: Is the check result normal?
YES : Go to Step 4.
NO : Repair the damaged connector.

STEP 4. Check the wiring harness between C-111 EV-ECU connector terminal No. 106, 107 and C-22 main battery connector terminal No. 3, 6.

Check the signal lines for short to power supply.

Q: Is the check result normal?
YES : Go to Step 5.
NO : Repair the wiring harness.

STEP 5. Voltage measurement at G-18 high-voltage connector, service plug

⚠ DANGER

When servicing the high voltage system parts, always wear the protective equipment or armour to measure the high voltage (refer to).

⚠ DANGER

Be sure to wear the specified protective equipment when removing the service plug.

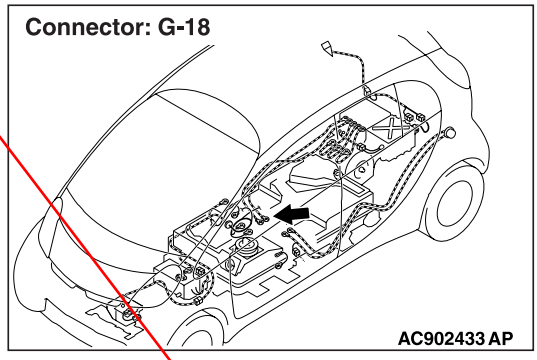

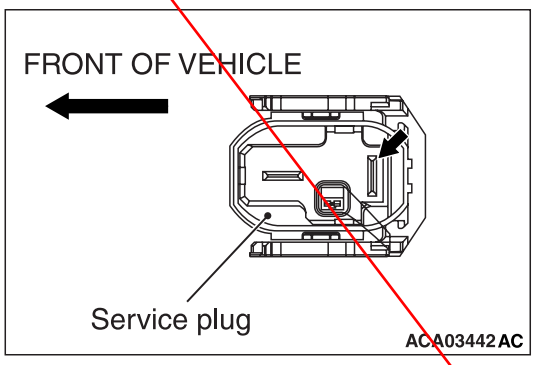

(1) Using a high voltage multimeter, measure the high voltage between the G-18 connection terminal and service plug backward terminal.

OK: 0 V

Q: Is the check result normal?

YES : Go to Step 6.
NO : Go to Step 7.

STEP 6. Diagnosis code recheck
Check again if the diagnosis code is set to the EV-ECU.
(1) Erase the stored diagnosis code.
(2) Set the electric motor switch from the "LOCK" (OFF) position to the "ON", and then to the "START" position temporarily.
(3) Check if the diagnosis code is set.

Q: Is the diagnosis code set?
YES : Replace the EV-ECU. (Refer to .) Then go to Step 7.
NO : Intermittent malfunction (Refer to GROUP 00 – How to Use Troubleshooting/ Inspection Service Points - How to Cope with Intermittent Malfunction .)

STEP 7. Diagnosis code recheck
Check again if the diagnosis code is set to the EV-ECU.
(1) Erase the stored diagnosis code.
(2) Set the electric motor switch from the "LOCK" (OFF) position to the "ON", and then to the "START" position temporarily.
(3) Check if the diagnosis code is set.

Q: Is the diagnosis code set?
YES : Replace the main battery. (Refer to .) Then go to Step 8.
NO : The diagnosis is complete.

STEP 8. Diagnosis code recheck
Check again if the diagnosis code is set to the EV-ECU.
(1) Erase the stored diagnosis code.
(2) Set the electric motor switch from the "LOCK" (OFF) position to the "ON", and then to the "START" position temporarily.
(3) Check if the diagnosis code is set.

Q: Is the diagnosis code set?
YES : Return to Step 1.
NO : The diagnosis is complete.

Code No. P0ABA: Motor drive voltage sensor error (MCU)

⚠ CAUTION
If there is any problem in the CAN bus lines, an incorrect diagnosis code may be set. Prior to this diagnosis, always diagnose the CAN bus lines.

OPERATION
MCU communicates with the EV-ECU via CAN.

DIAGNOSIS CODE SET CONDITIONS
- When the diagnosis code No. P0ABA is set to the MCU, the diagnosis code No. P0ABA will be set.

PROBABLE CAUSES
- Malfunction of the MCU motor drive voltage sensor system

DIAGNOSIS PROCEDURE

STEP 1. M.U.T.-III CAN bus diagnosis
Use the M.U.T.-III to diagnose the CAN bus lines.

Q: Is the check result normal?
YES : Go to Step 3.
NO : Repair the CAN bus line. (Refer to GROUP 54C – Troubleshooting .) Then go to Step 2.

STEP 2. Diagnosis code recheck after resetting CAN bus lines
Check again if the diagnosis code No. P0ABA is set to the EV-ECU.
(1) Erase the stored diagnosis code.
(2) Set the electric motor switch from the "LOCK" (OFF) position to the "ON" position.
(3) Check if the diagnosis code is set.

Q: Is the diagnosis code set?
YES : Go to Step 3.
NO : This diagnosis is complete.

STEP 3. Use M.U.T.-III to confirm a diagnosis code of other systems.
Check if the diagnosis code No. P0ABA is set to the MCU.

Q: Is the diagnosis code set?
YES : Carry out troubleshooting for the diagnosis code No. P0ABA. (Refer to .) Then go to Step 4.
NO : Go to Step 4.

Code No. P0AA4: Main contactor (–) (seizure)

HIGH VOLTAGE POWER SUPPLY CONTROL SYSTEM CIRCUIT

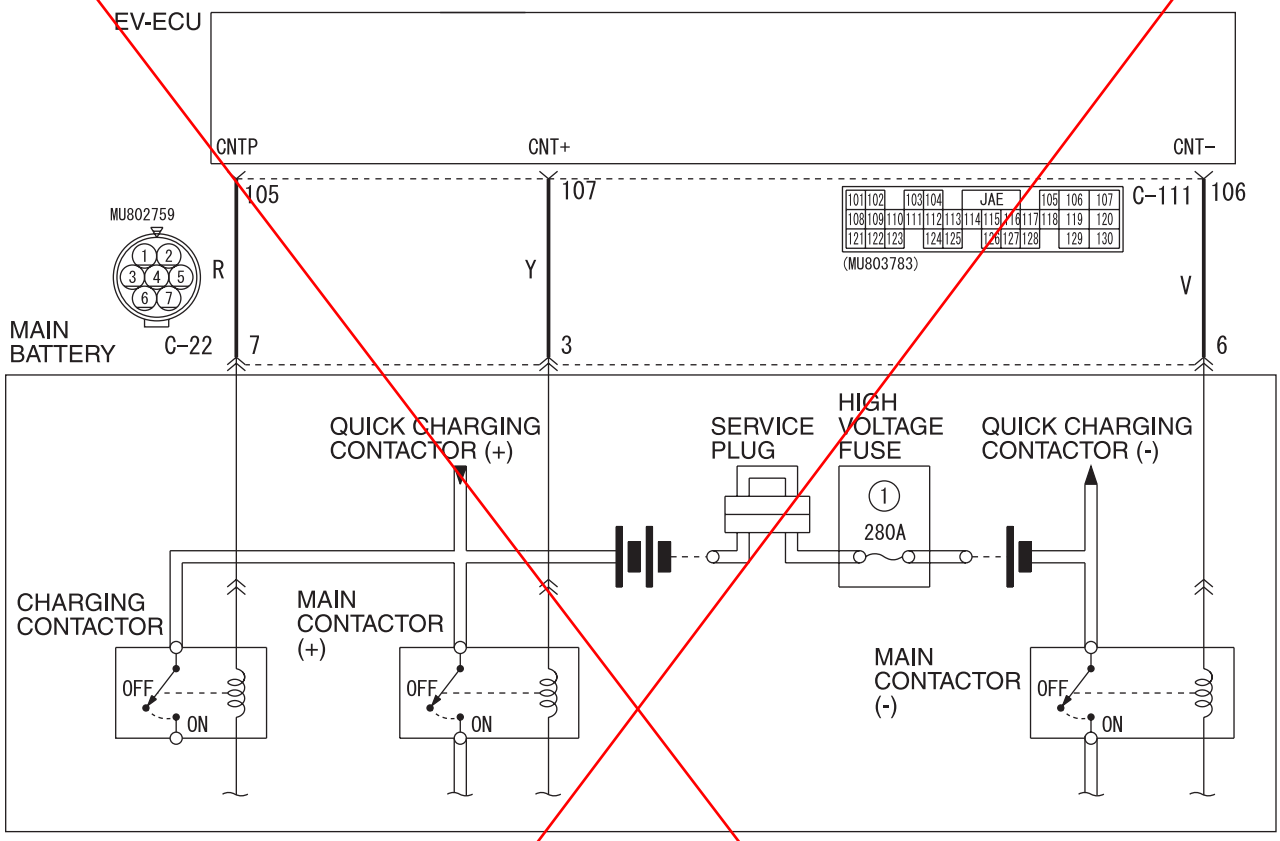

Wire colour code
B : Black LG : Light green G : Green L : Blue W : White Y : Yellow SB : Sky blue
BR : Brown O : Orange GR : Grey R : Red P : Pink V : Violet PU : Purple SI : Silver

ACA03485

Connector: C-22

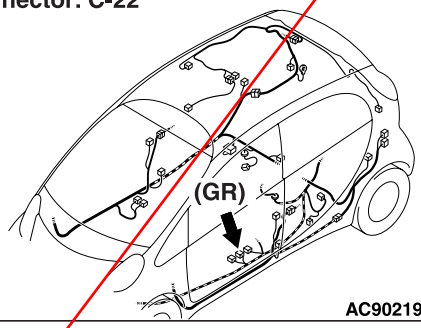

AC902191AO

Connector: C-111
Rear floor lower part

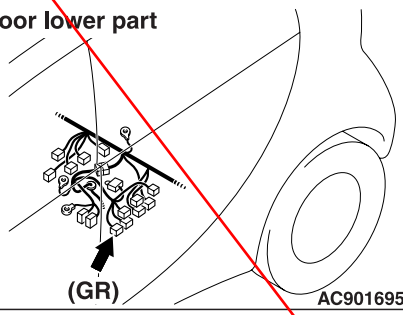

AC901695AM

⚠ ***DANGER***

- ***When servicing the high voltage system parts, always shut off the high voltage by removing the service plug (refer to).***
- ***When servicing the high voltage system parts, always wear the protective equipment or armour to measure the high voltage (refer to).***

⚠ **CAUTION**

If there is any problem in the CAN bus lines, an incorrect diagnosis code may be set. Prior to this diagnosis, always diagnose the CAN bus lines.

OPERATION

- The smooth condenser in the EMCU is controlled by the EV-ECU, connects and shuts down the high-voltage circuit via the main contactor (+) and (–) in the main battery.

DIAGNOSIS CODE SET CONDITIONS

- If a seizure of the main contactor (–) is determined when the high-voltage circuit is activated, the diagnosis code No. P0AA4 will be set.

PROBABLE CAUSES

- Damaged wiring harness or connector(s)
- Malfunction of the main battery
- Malfunction of the EV-ECU

DIAGNOSIS PROCEDURE

STEP 1. M.U.T.-III CAN bus diagnosis

Use the M.U.T.-III to diagnose the CAN bus lines.

Q: Is the check result normal?
YES : Go to Step 3.
NO : Repair the CAN bus line. (Refer to GROUP 54C – Troubleshooting) Then go to Step 2.

STEP 2. Diagnosis code recheck after resetting CAN bus lines

Check again if the diagnosis code No. P0AA4 is set to the EV-ECU.
(1) Erase the stored diagnosis code.
(2) Set the electric motor switch from the "LOCK" (OFF) position to the "ON", and then to the "START" position temporarily.
(3) Check if the diagnosis code is set.

Q: Is the diagnosis code set?
YES : Go to Step 3.
NO : This diagnosis is complete.

STEP 3. Connector check: C-22 main battery connector, C-111 EV-ECU connector

Q: Is the check result normal?
YES : Go to Step 4.
NO : Repair the damaged connector.

STEP 4. Check the wiring harness between C-111 EV-ECU connector terminal No. 106, 107 and C-22 main battery connector terminal No. 3, 6.

Check the signal lines for short to power supply.

Q: Is the check result normal?
YES : Go to Step 5.
NO : Repair the wiring harness.

STEP 5. Voltage measurement at G-18 high-voltage, service plug connector

⚠ ***DANGER***

When servicing the high voltage system parts, always wear the protective equipment or armour to measure the high voltage (refer to).

⚠ ***DANGER***

Be sure to wear the specified protective equipment when removing the service plug.

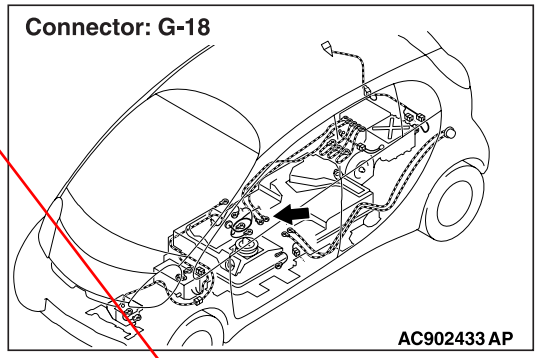

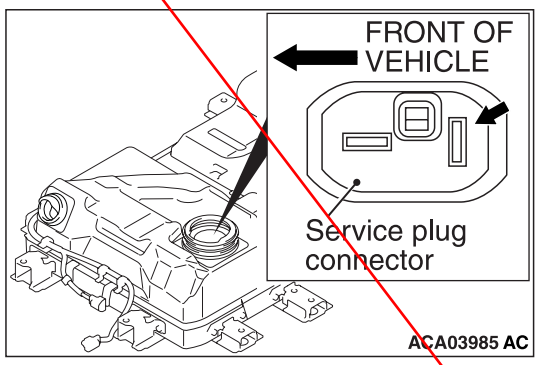

(1) Using a high voltage multimeter, measure the high voltage between the G-18 connection terminal and service plug connection backward

terminal.

OK: 0 V

Q: Is the check result normal?
YES : Go to Step 6.
NO : Go to Step 7.

STEP 6. Diagnosis code recheck
Check again if the diagnosis code is set to the EV-ECU.
(1) Erase the stored diagnosis code.
(2) Set the electric motor switch from the "LOCK" (OFF) position to the "ON", and then to the "START" position temporarily.
(3) Check if the diagnosis code is set.

Q: Is the diagnosis code set?
YES : Replace the EV-ECU. (Refer to .) Then go to Step 7.
NO : Intermittent malfunction (Refer to GROUP 00 – How to Use Troubleshooting/ Inspection Service Points - How to Cope with Intermittent Malfunction .)

STEP 7. Diagnosis code recheck
Check again if the diagnosis code is set to the EV-ECU.
(1) Erase the stored diagnosis code.
(2) Set the electric motor switch from the "LOCK" (OFF) position to the "ON", and then to the "START" position temporarily.
(3) Check if the diagnosis code is set.

Q: Is the diagnosis code set?
YES : Replace the main battery. (Refer to .) Then go to Step 8.
NO : The diagnosis is complete.

STEP 8. Diagnosis code recheck
Check again if the diagnosis code is set to the EV-ECU.
(1) Erase the stored diagnosis code.
(2) Set the electric motor switch from the "LOCK" (OFF) position to the "ON", and then to the "START" position temporarily.
(3) Check if the diagnosis code is set.

Q: Is the diagnosis code set?
YES : Return to Step 1.
NO : The diagnosis is complete.

Code No. P0ABA: Motor drive voltage sensor error (EMCU)

⚠ CAUTION
If there is any problem in the CAN bus lines, an incorrect diagnosis code may be set. Prior to this diagnosis, always diagnose the CAN bus lines.

OPERATION
EMCU communicates with the EV-ECU via CAN.

DIAGNOSIS CODE SET CONDITIONS
- When the diagnosis code No. P0ABA is set to the EMCU, the diagnosis code No. P0ABA will be set.

PROBABLE CAUSES
- Malfunction of the EMCU motor drive voltage sensor system

DIAGNOSIS PROCEDURE

STEP 1. M.U.T.-III CAN bus diagnosis
Use the M.U.T.-III to diagnose the CAN bus lines.

Q: Is the check result normal?
YES : Go to Step 3.
NO : Repair the CAN bus line. (Refer to GROUP 54C – Troubleshooting .) Then go to Step 2.

STEP 2. Diagnosis code recheck after resetting CAN bus lines
Check again if the diagnosis code No. P0ABA is set to the EV-ECU.
(1) Erase the stored diagnosis code.
(2) Set the electric motor switch from the "LOCK" (OFF) position to the "ON" position.
(3) Check if the diagnosis code is set.

Q: Is the diagnosis code set?
YES : Go to Step 3.
NO : This diagnosis is complete.

STEP 3. Use M.U.T.-III to confirm a diagnosis code of other systems.
Check if the diagnosis code No. P0ABA is set to the EMCU.

Q: Is the diagnosis code set?

To Attached sheet 17 (1/11－6/11)

Attached sheet 17 (7/11)

Code No. P0AA4: Main contactor (–) (seizure)

HIGH VOLTAGE POWER SUPPLY CONTROL SYSTEM CIRCUIT

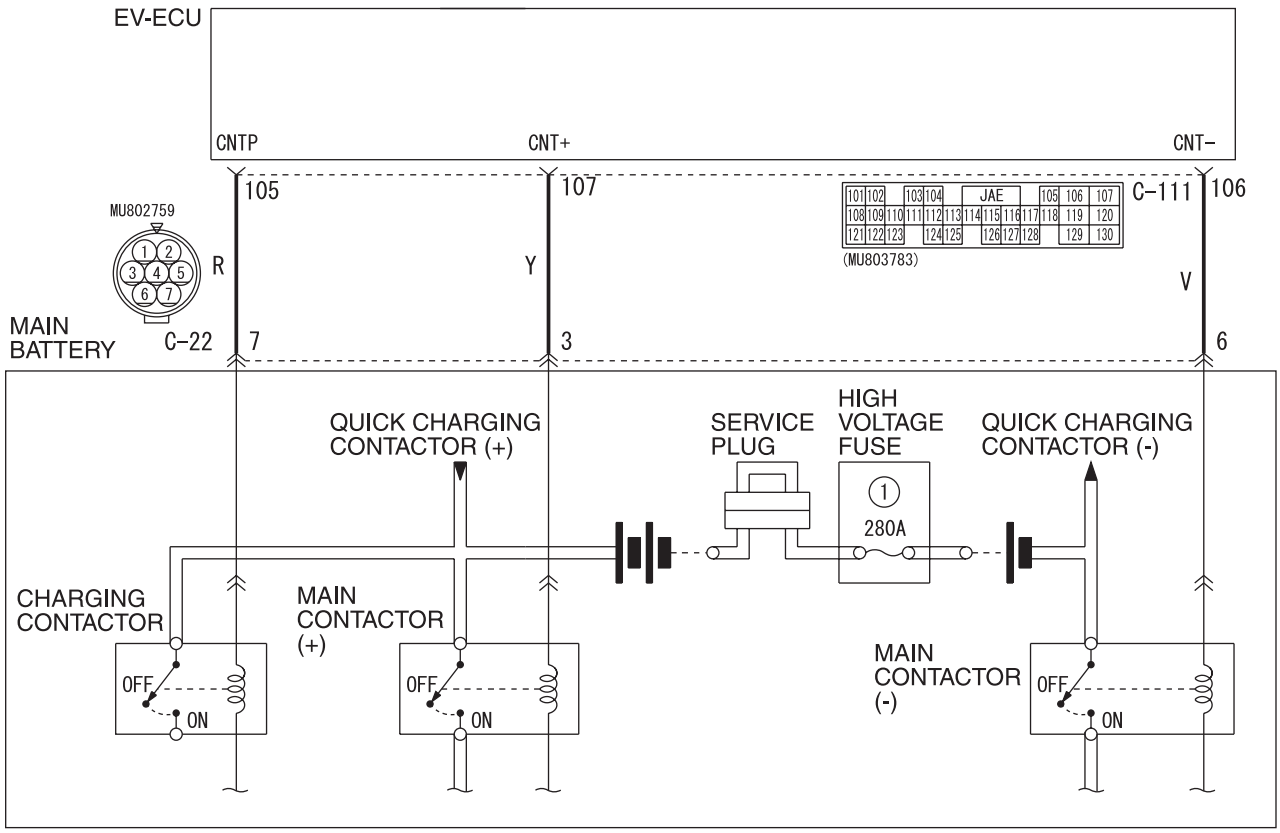

Wire colour code
B : Black LG : Light green G : Green L : Blue W : White Y : Yellow SB : Sky blue
BR : Brown O : Orange GR : Grey R : Red P : Pink V : Violet PU : Purple SI : Silver

ACA03485

To Attached sheet 17 (1/11－6/11)

A/C Control Circuit

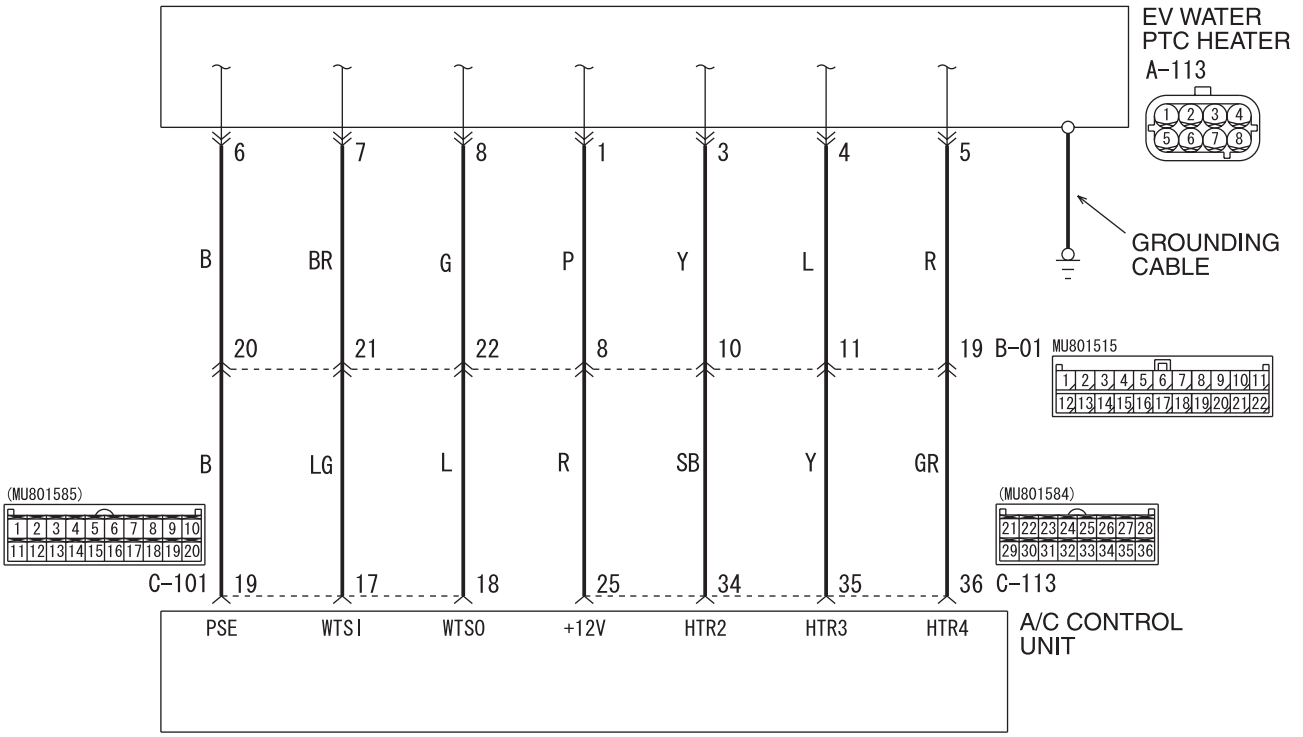

ACC00326
WDT55M008A

Connector: A-113 <LHD>

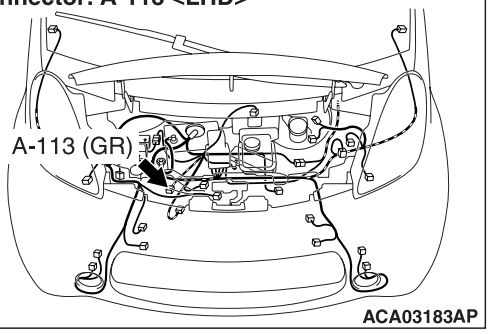

ACA03183AP

Connector: C-22

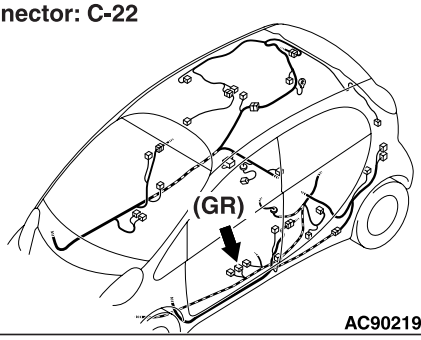

AC902191AO

Connector: A-113 <RHD>

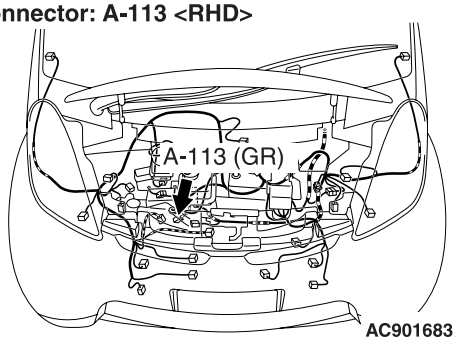

AC901683AV

Connector: C-111, C-113
Rear floor lower part

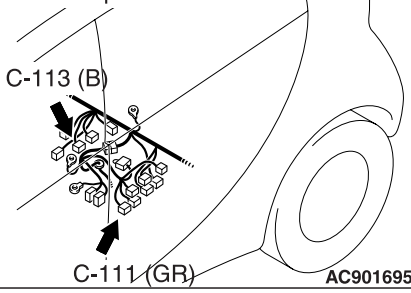

AC901695BH

To Attached sheet 17 (1/11－6/11)

Attached sheet 17 (9/11)

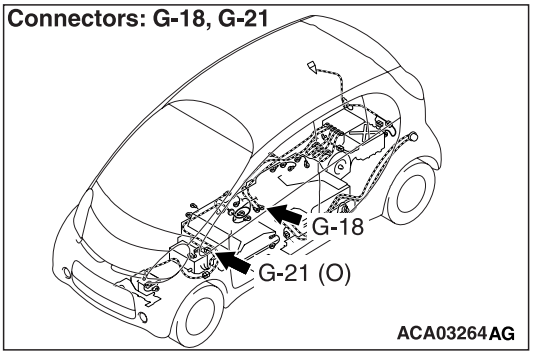

⚠ ***DANGER***

- ***When servicing the high voltage system parts, always shut off the high voltage by removing the service plug (refer to).***
- ***When servicing the high voltage system parts, always wear the protective equipment or armour to measure the high voltage (refer to).***

⚠ **CAUTION**

If there is any problem in the CAN bus lines, an incorrect diagnosis code may be set. Prior to this diagnosis, always diagnose the CAN bus lines (Refer to GROUP 54C – CAN Bus Diagnostics Table).

OPERATION

- The main contactors (+) and (-) the charging contactor inside the main battery, which are controlled by the EV-ECU, activate and deactivate the high-voltage circuit. The EV-ECU monitors the voltage in the smoothing condenser in the EMCU.

DIAGNOSIS CODE SET CONDITIONS

- If a seizure of the main contactor (–) is determined when the high-voltage circuit is activated, the diagnosis code No. P0AA4 will be set.

PROBABLE CAUSES

- Damaged wiring harness or connector(s)
- Malfunction of the main battery assembly
- Malfunction of the EV-ECU
- Malfunction of the EV water PTC heater
- Malfunction of the A/C control unit
- Malfunction of the onboard charger/DC-DC converter
- Malfunction of the EMCU
- Malfunction of the A/C compressor

DIAGNOSIS PROCEDURE

STEP 1. M.U.T.-III CAN bus diagnosis

Use the M.U.T.-III to diagnose the CAN bus lines.

Q: Is the check result normal?

YES : Go to Step 3.

NO : Repair the CAN bus line (Refer to GROUP 54C – Troubleshooting). Then go to Step 2.

STEP 2. Diagnosis code recheck after resetting CAN bus lines

Check again if the diagnosis code No. P0AA4 is set to the EV-ECU.

(1) Erase the stored diagnosis code.

(2) Set the electric motor switch from the "LOCK" (OFF) position to the "ON", and then to the "START" position temporarily.

(3) Check if the diagnosis code is set.

Q: Is the diagnosis code set?

YES : Go to Step 3.

NO : This diagnosis is complete.

STEP 3. Connector check: C-22 main battery connector, C-111 EV-ECU connector

Q: Is the check result normal?

YES : Go to Step 4.

NO : Repair the damaged connector.

STEP 4. Check the wiring harness between C-111 EV-ECU connector terminal No. 106 and C-22 main battery connector terminal No. 6.

Check the signal lines for short to power supply.

Q: Is the check result normal?

YES : Go to Step 5.

NO : Repair the wiring harness.

To Attached sheet 17 (1/11－6/11)

<New>

STEP 5. Voltage measurement at G-18 high-voltage, service plug connector

⚠ ***DANGER***

Carry out the check on the high-voltage circuit while reading carefully the precautions on handling a high-voltage vehicle.

⚠ ***DANGER***

Be sure to wear the specified protective equipment when removing the service plug.

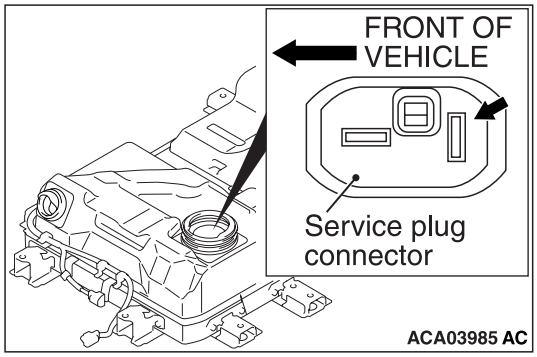

(1) Using a high voltage multimeter, measure the high voltage between the G-18 connection terminal and service plug connection backward terminal.

OK: 0 V

Q: Is the check result normal?
YES : Go to Step 6.
NO : Go to Step 14.

STEP 6. Use M.U.T.-III diagnosis code of other.

Check if the diagnosis code except No. P1A16 or P1A26 is set to the EV-ECU.

Q: Is the diagnosis code set?
YES : Carry out troubleshooting for the diagnosis code.
NO : Go to Step 7.

STEP 7. Use M.U.T.-III diagnosis code of other systems.

Check if the diagnosis code is set to the A/C control unit.

Q: Is the diagnosis code set?
YES : Carry out troubleshooting for the diagnosis code.
NO : Go to Step 8.

STEP 8. Measure the resistance of the G-21 EV water PTC heater connector.

⚠ ***DANGER***

Carry out the check on the high-voltage circuit while reading carefully the precautions on handling a high-voltage vehicle.

⚠ ***DANGER***

Wear the specified protection equipment during the check.

(1) Remove the service plug.
(2) Disconnect the G-21 EV water PTC heater connector.
(3) Measure it on the resistance at the EV water PTC heater side.
(4) Measure the resistance between the G-21 EV water PTC heater connector terminal No.1 and No.2.

OK: 1 MΩ or more

Q: Is the check result normal?
YES : Go to Step 9.
NO : Check the high-voltage fuse No.3 (Refer to). Replace the EV water PTC heater (Refer to GROUP 55 - EV Water PTC Heater).

STEP 9. Measure the resistance at A-113 EV water PTC heater connector.

(1) Disconnect the A-113 EV water PTC heater connector and measure it on the resistance at the EV water PTC heater side.
(2) Measure the resistance between the A-113 EV water PTC heater connector terminal No. 3, 4, 5 and the body earth.

OK: No continuity

Q: Is the check result normal?
YES : Go to Step 10.
NO : Replace the EV water PTC heater (Refer to GROUP 55 - EV Water PTC Heater).

STEP 10. Measure the resistance at A-113 EV water PTC heater connector.

(1) Disconnect the A-113 EV water PTC heater connector and measure it on the resistance at the wiring harness side.
(2) Measure the resistance between the A-113 EV water PTC heater connector terminal No. 3, 4, 5 and the body earth.

OK: No continuity

Q: Is the check result normal?
YES : Go to Step 13.
NO : Go to Step 11.

<New>

STEP 11. Connector check: A-113 EV water PTC heater connector, B-01 joint connector, C-113 A/C control unit connector.

Q: Is the check result normal?
YES : Go to Step 12.
NO : Repair the damaged connector.

STEP 12. Check the wiring harness between A-113 EV water PTC heater connector terminal No. 3, 4, 5 and C-113 A/C control unit connector terminal No. 34, 35, 36.
Check the signal line for short circuit.

Q: Is the check result normal?
YES : Replace the A/C control unit.
NO : Repair the wiring harness.

STEP 13. Diagnosis code recheck
Check again if the diagnosis code is set to the EV-ECU.
(1) Erase the stored diagnosis code.
(2) Set the electric motor switch from the "LOCK" (OFF) position to the "ON", and then to the "START" position temporarily.
(3) Check if the diagnosis code is set.

Q: Is the diagnosis code set?
YES : Replace the EV-ECU (Refer to). Then go to Step 14.
NO : Intermittent malfunction (Refer to GROUP 00 – How to Use Troubleshooting/ Inspection Service Points - How to Cope with Intermittent Malfunction .)

STEP 14. Diagnosis code recheck
Check again if the diagnosis code is set to the EV-ECU.
(1) Erase the stored diagnosis code.
(2) Set the electric motor switch from the "LOCK" (OFF) position to the "ON", and then to the "START" position temporarily.
(3) Check if the diagnosis code is set.

Q: Is the diagnosis code set?
YES : Replace the main battery assembly (Refer to). Then go to Step 15.
NO : The diagnosis is complete.

STEP 15. Diagnosis code recheck
Check again if the diagnosis code is set to the EV-ECU.
(1) Erase the stored diagnosis code.
(2) Set the electric motor switch from the "LOCK" (OFF) position to the "ON", and then to the "START" position temporarily.
(3) Check if the diagnosis code is set.

Q: Is the diagnosis code set?
YES : Return to Step 1.
NO : The diagnosis is complete.

Code No. P0ABA: Motor drive voltage sensor error (EMCU)

⚠ CAUTION
If there is any problem in the CAN bus lines, an incorrect diagnosis code may be set. Prior to this diagnosis, always diagnose the CAN bus lines.

OPERATION
EMCU communicates with the EV-ECU via CAN.

DIAGNOSIS CODE SET CONDITIONS
- When the diagnosis code No. P0ABA is set to the EMCU, the diagnosis code No. P0ABA will be set.

PROBABLE CAUSES
- Malfunction of the EMCU motor drive voltage sensor system

DIAGNOSIS PROCEDURE

STEP 1. M.U.T.-III CAN bus diagnosis
Use the M.U.T.-III to diagnose the CAN bus lines.

Q: Is the check result normal?
YES : Go to Step 3.
NO : Repair the CAN bus line. (Refer to GROUP 54C – Troubleshooting .) Then go to Step 2.

STEP 2. Diagnosis code recheck after resetting CAN bus lines
Check again if the diagnosis code No. P0ABA is set to the EV-ECU.
(1) Erase the stored diagnosis code.
(2) Set the electric motor switch from the "LOCK" (OFF) position to the "ON" position.

Replace with attached sheets 18 (7/11—11/11)

<New>

11 MODEL

Attached sheet 18 (1/11)

<Old>

Code No. P0AE2: Charging contactor (seizure)

HIGH VOLTAGE POWER SUPPLY CONTROL SYSTEM CIRCUIT

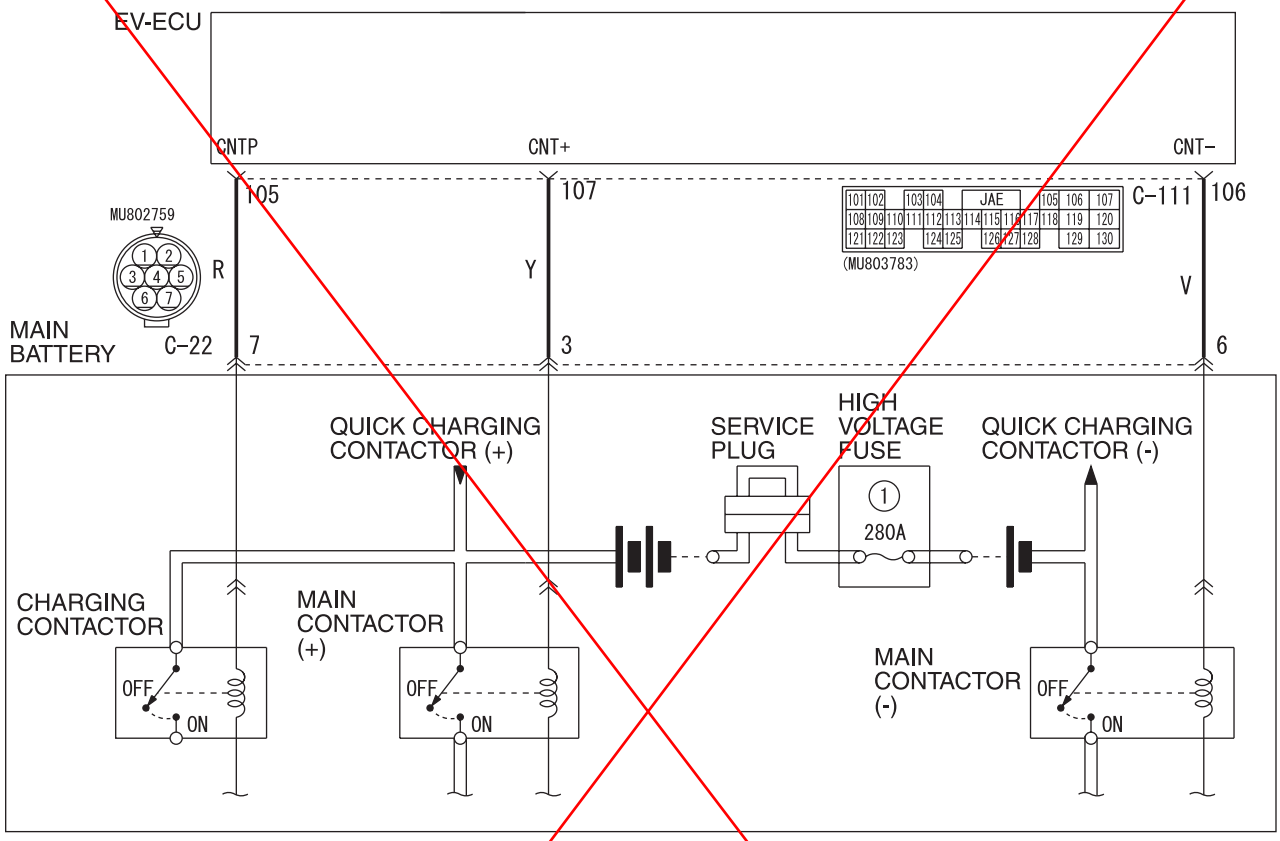

Wire colour code
B : Black LG : Light green G : Green L : Blue W : White Y : Yellow SB : Sky blue
BR : Brown O : Orange GR : Grey R : Red P : Pink V : Violet PU : Purple SI : Silver

ACA03485

Connector: C-22

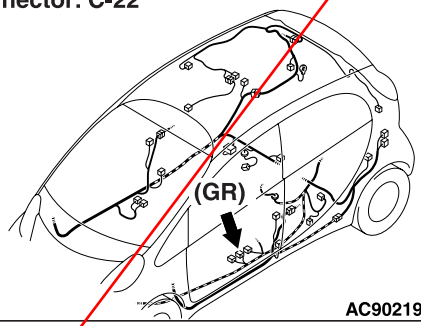

AC902191AO

Connector: C-111
Rear floor lower part

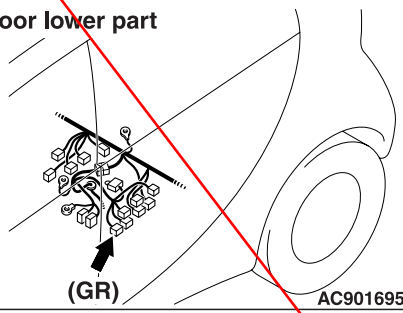

AC901695AM

⚠ ***DANGER***

- ***When servicing the high voltage system parts, always shut off the high voltage by removing the service plug (refer to).***
- ***When servicing the high voltage system parts, always wear the protective equipment or armour to measure the high voltage (refer to).***

⚠ **CAUTION**

If there is any problem in the CAN bus lines, an incorrect diagnosis code may be set. Prior to this diagnosis, always diagnose the CAN bus lines.

OPERATION

- The charging contactor in the main battery is controlled by the EV-ECU and operates when the high-voltage circuit is activated.

DIAGNOSIS CODE SET CONDITIONS

- If a seizure of the charging contactor is determined when the high-voltage circuit is shut down, the diagnosis code No. P0AE2 will be set.

PROBABLE CAUSES

- Damaged wiring harness or connector(s)
- Malfunction of the main battery
- Malfunction of the EV-ECU

DIAGNOSIS PROCEDURE

STEP 1. M.U.T.-III CAN bus diagnosis

Use the M.U.T.-III to diagnose the CAN bus lines.

Q: Is the check result normal?

YES : Go to Step 3.
NO : Repair the CAN bus line. (Refer to GROUP 54C – Troubleshooting .) Then go to Step 2.

STEP 2. Diagnosis code recheck after resetting CAN bus lines

Check again if the diagnosis code No. P0AE2 is set to the EV-ECU.
(1) Erase the stored diagnosis code.
(2) Set the electric motor switch from the "LOCK" (OFF) position to the "ON" position.
(3) Check if the diagnosis code is set.

Q: Is the diagnosis code set?

YES : Go to Step 3.
NO : This diagnosis is complete.

STEP 3. Connector check: C-22 main battery connector, C-111 EV-ECU connector

Q: Is the check result normal?

YES : Go to Step 4.
NO : Repair the damaged connector.

STEP 4. Check the wiring harness between C-111 EV-ECU connector terminal No. 105 and C-22 main battery connector terminal No. 7.

Check the output lines for open circuit and short to earth.

Q: Is the check result normal?

YES : Go to Step 5.
NO : Repair the wiring harness.

STEP 5. Diagnosis code recheck

Check again if the diagnosis code is set to the EV-ECU.
(1) Erase the stored diagnosis code.
(2) Set the electric motor switch from the "LOCK" (OFF) position to the "ON", and then to the "START" position temporarily.
(3) Reset the electric motor switch from the "LOCK" (OFF) position to the "ON" position.
(4) Check if the diagnosis code is set.

Q: Is the diagnosis code set?

YES : Replace the EV-ECU. (Refer to .) Then go to Step 6.
NO : Intermittent malfunction (Refer to GROUP 00 – How to Use Troubleshooting/ Inspection Service Points - How to Cope with Intermittent Malfunction .)

STEP 6. Diagnosis code recheck

Check again if the diagnosis code is set to the EV-ECU.
(1) Erase the stored diagnosis code.
(2) Set the electric motor switch from the "LOCK" (OFF) position to the "ON", and then to the "START" position temporarily.
(3) Reset the electric motor switch from the "LOCK" (OFF) position to the "ON" position.
(4) Check if the diagnosis code is set.

Q: Is the diagnosis code set?

YES : Replace the main battery. (Refer to .) Then go to Step 7.
NO : The diagnosis is complete.

STEP 7. Diagnosis code recheck

Check again if the diagnosis code is set to the EV-ECU.
(1) Erase the stored diagnosis code.
(2) Set the electric motor switch from the "LOCK" (OFF) position to the "ON", and then to the "START" position temporarily.

<Old>

~~(3) Reset the electric motor switch from the "LOCK" (OFF) position to the "ON" position.~~
~~(4) Check if the diagnosis code is set.~~

~~**Q: Is the diagnosis code set?**~~
~~**YES :** Return to Step 1.~~
~~**NO :** The diagnosis is complete.~~

Code No. P0AE6: Charging contactor (low input)
Code No. P0AE7: Charging contactor (high input)

HIGH VOLTAGE POWER SUPPLY CONTROL SYSTEM CIRCUIT

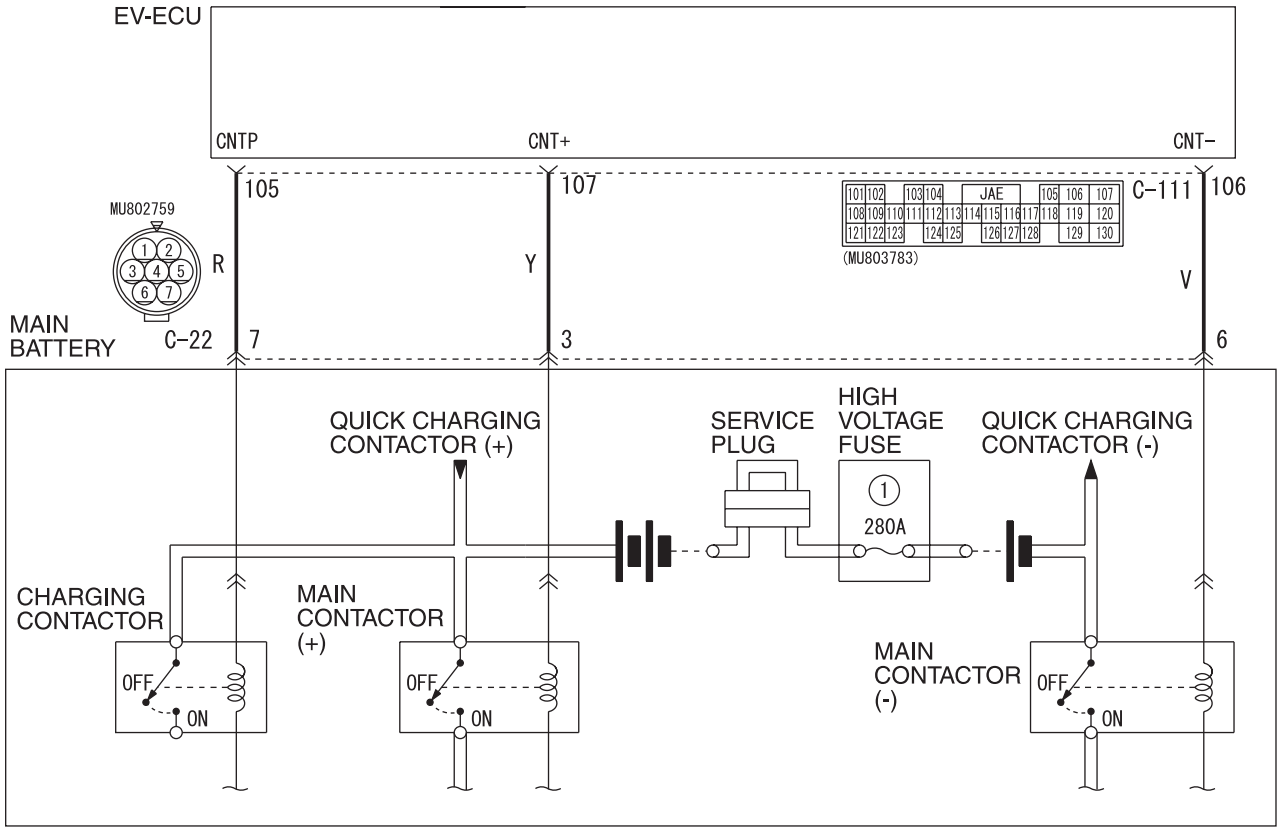

Wire colour code
B : Black LG : Light green G : Green L : Blue W : White Y : Yellow SB : Sky blue
BR : Brown O : Orange GR : Grey R : Red P : Pink V : Violet PU : Purple SI : Silver

ACA03485

Connector: C-22

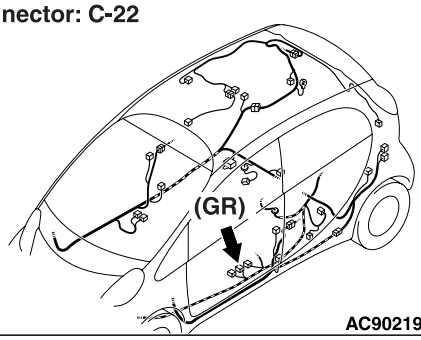

AC902191AO

Connector: C-111
Rear floor lower part

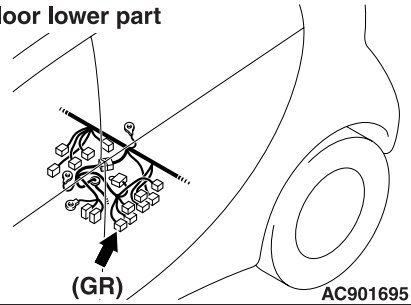

AC901695AM

Code No. P0AE2: Charging contactor (seizure)

HIGH VOLTAGE POWER SUPPLY CONTROL SYSTEM CIRCUIT

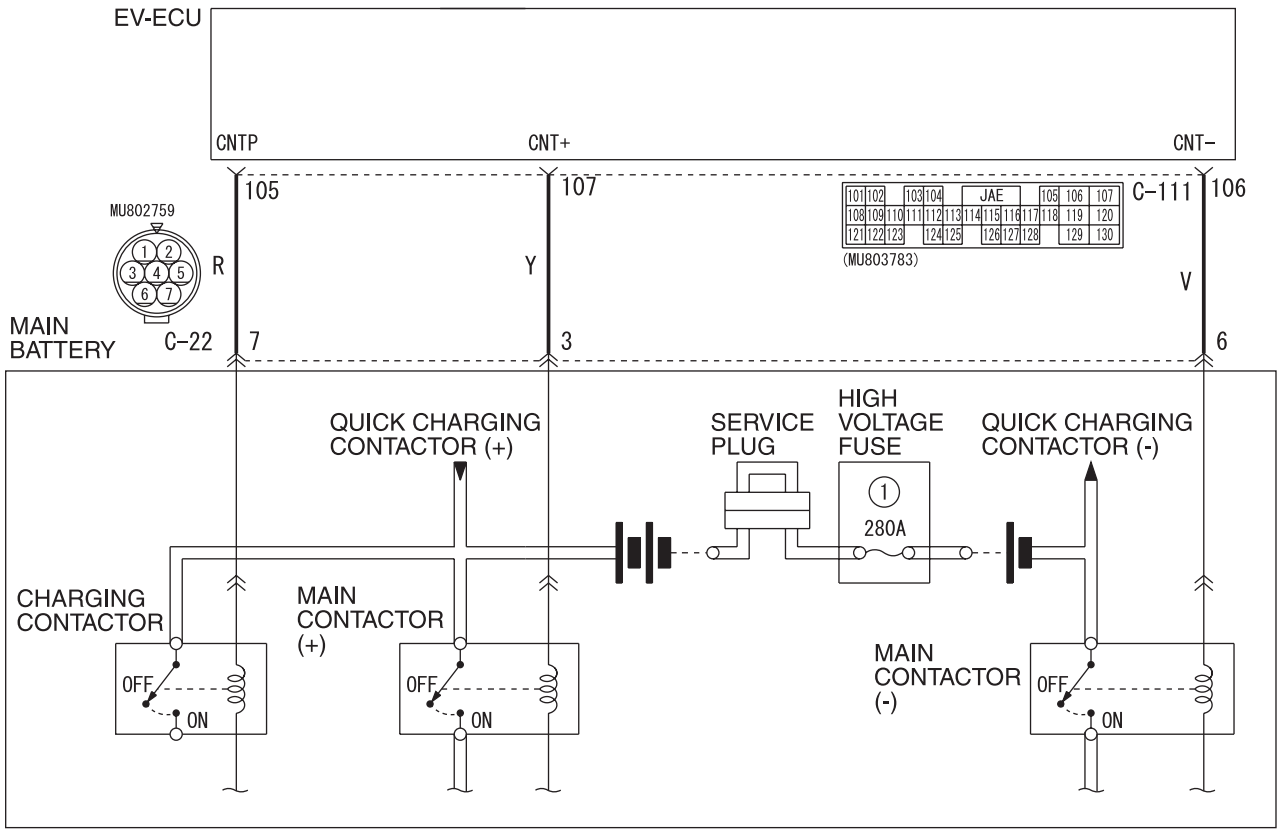

Wire colour code
B : Black LG : Light green G : Green L : Blue W : White Y : Yellow SB : Sky blue
BR : Brown O : Orange GR : Grey R : Red P : Pink V : Violet PU : Purple SI : Silver

ACA03485

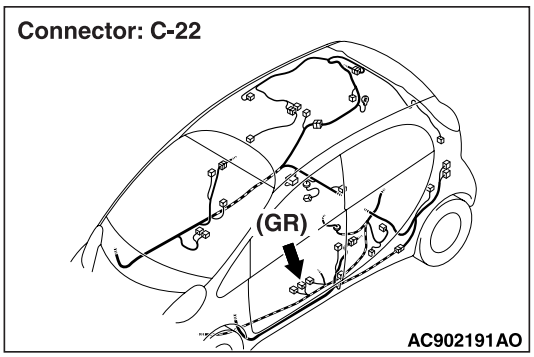

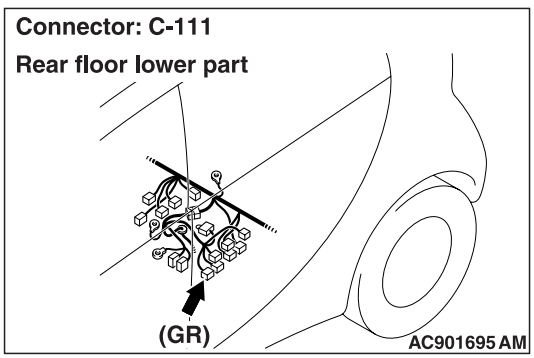

⚠ ***DANGER***

- ***When servicing the high voltage system parts, always shut off the high voltage by removing the service plug (refer to).***
- ***When servicing the high voltage system parts, always wear the protective equipment or armour to measure the high voltage (refer to).***

⚠ **CAUTION**

If there is any problem in the CAN bus lines, an incorrect diagnosis code may be set. Prior to this diagnosis, always diagnose the CAN bus lines.

OPERATION

- The charging contactor in the main battery is controlled by the EV-ECU and operates when the high-voltage circuit is activated.

DIAGNOSIS CODE SET CONDITIONS

- If a seizure of the charging contactor is determined when the high-voltage circuit is shut down, the diagnosis code No. P0AE2 will be set.

PROBABLE CAUSES

- Damaged wiring harness or connector(s)
- Malfunction of the main battery
- Malfunction of the EV-ECU

DIAGNOSIS PROCEDURE

STEP 1. M.U.T.-III CAN bus diagnosis

Use the M.U.T.-III to diagnose the CAN bus lines.

Q: Is the check result normal?

YES : Go to Step 3.

NO : Repair the CAN bus line. (Refer to GROUP 54C – Troubleshooting .) Then go to Step 2.

STEP 2. Diagnosis code recheck after resetting CAN bus lines

Check again if the diagnosis code No. P0AE2 is set to the EV-ECU.

(1) Erase the stored diagnosis code.
(2) Set the electric motor switch from the "LOCK" (OFF) position to the "ON", and then to the "START" position temporarily.
(3) Reset the electric motor switch from the "LOCK" (OFF) position to the "ON" position.
(4) Check if the diagnosis code is set.

Q: Is the diagnosis code set?

YES : Go to Step 3.

NO : This diagnosis is complete.

STEP 3. Connector check: C-22 main battery connector, C-111 EV-ECU connector

Q: Is the check result normal?

YES : Go to Step 4.

NO : Repair the damaged connector.

STEP 4. Check the wiring harness between C-111 EV-ECU connector terminal No. 105 and C-22 main battery connector terminal No. 7.

Check the output lines for open circuit and short to earth.

Q: Is the check result normal?

YES : Go to Step 5.

NO : Repair the wiring harness.

STEP 5. Diagnosis code recheck

Check again if the diagnosis code is set to the EV-ECU.

(1) Erase the stored diagnosis code.
(2) Set the electric motor switch from the "LOCK" (OFF) position to the "ON", and then to the "START" position temporarily.
(3) Reset the electric motor switch from the "LOCK" (OFF) position to the "ON" position.
(4) Check if the diagnosis code is set.

Q: Is the diagnosis code set?

YES : Replace the EV-ECU. (Refer to .) Then go to Step 6.

NO : Intermittent malfunction (Refer to GROUP 00 – How to Use Troubleshooting/ Inspection Service Points - How to Cope with Intermittent Malfunction .)

STEP 6. Diagnosis code recheck

Check again if the diagnosis code is set to the EV-ECU.

(1) Erase the stored diagnosis code.
(2) Set the electric motor switch from the "LOCK" (OFF) position to the "ON", and then to the "START" position temporarily.
(3) Reset the electric motor switch from the "LOCK" (OFF) position to the "ON" position.
(4) Check if the diagnosis code is set.

Q: Is the diagnosis code set?

YES : Replace the main battery. (Refer to .) Then go to Step 7.

NO : The diagnosis is complete.

STEP 7. Diagnosis code recheck

Check again if the diagnosis code is set to the EV-ECU.

(1) Erase the stored diagnosis code.
(2) Set the electric motor switch from the "LOCK" (OFF) position to the "ON", and then to the "START" position temporarily.
(3) Reset the electric motor switch from the "LOCK" (OFF) position to the "ON" position.
(4) Check if the diagnosis code is set.

Q: Is the diagnosis code set?
YES : Return to Step 1.
NO : The diagnosis is complete.

To Attached sheet 18 (1/11－6/11)

Attached sheet 18 (7/11)

Code No. P0AE2: Charging contactor (seizure)

HIGH VOLTAGE POWER SUPPLY CONTROL SYSTEM CIRCUIT

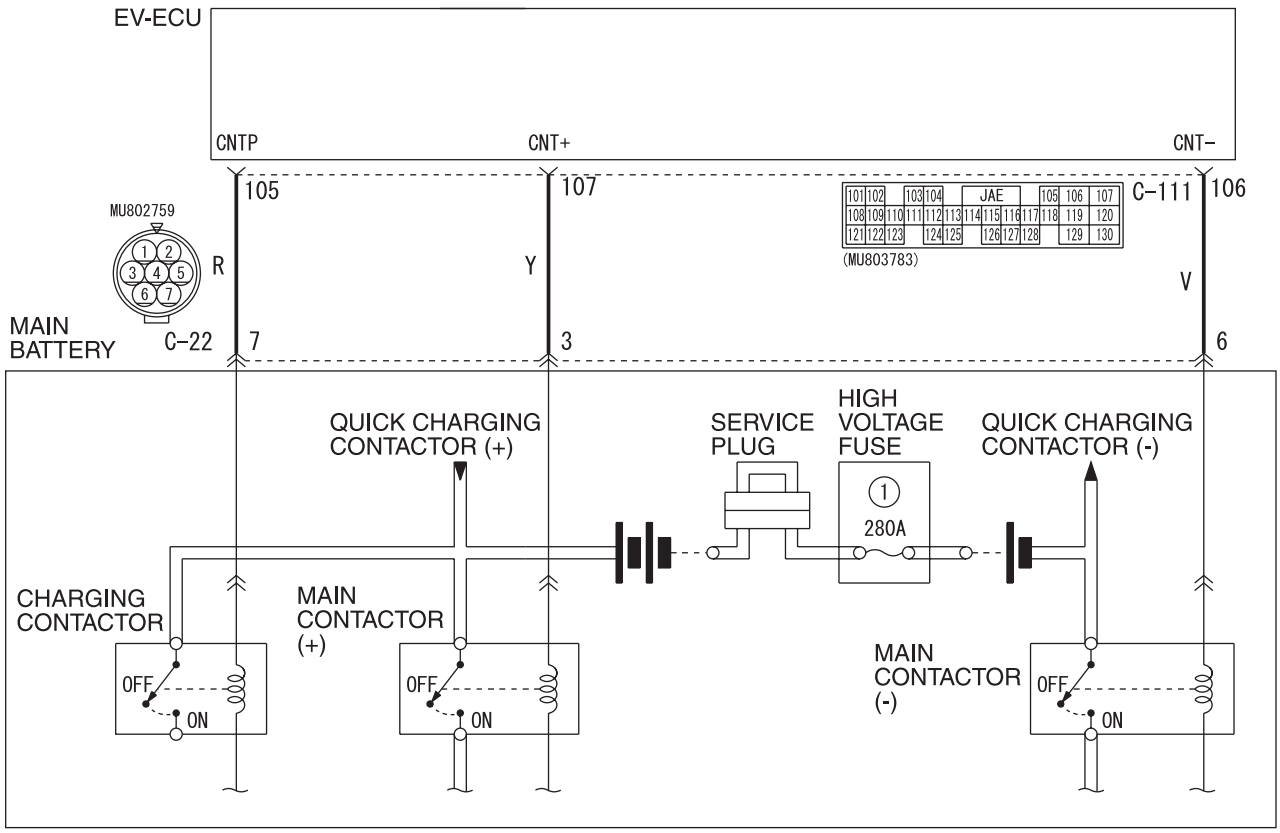

Wire colour code
B : Black LG : Light green G : Green L : Blue W : White Y : Yellow SB : Sky blue
BR : Brown O : Orange GR : Grey R : Red P : Pink V : Violet PU : Purple SI : Silver

ACA03485

To Attached sheet 18 (1/11－6/11)

Attached sheet 18 (8/11)

A/C Control Circuit

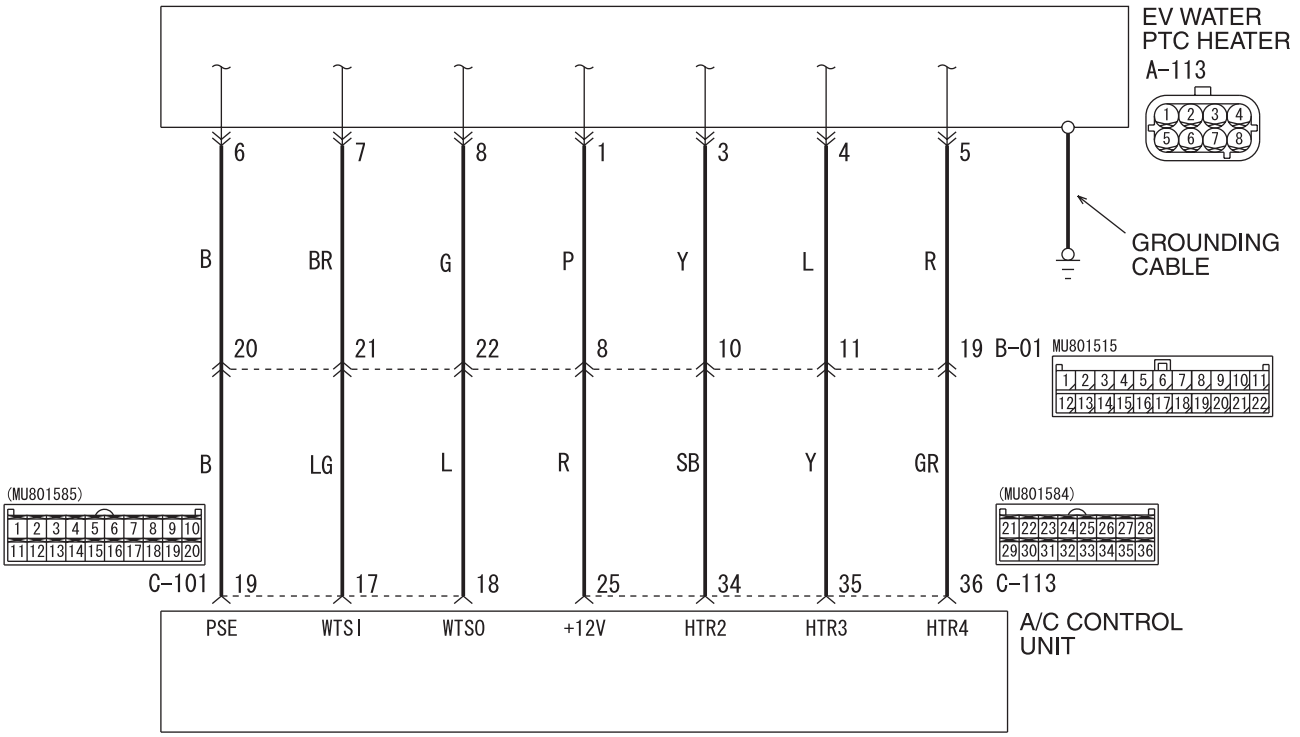

ACC00326
WDT55M008A

Connector: A-113 <LHD>

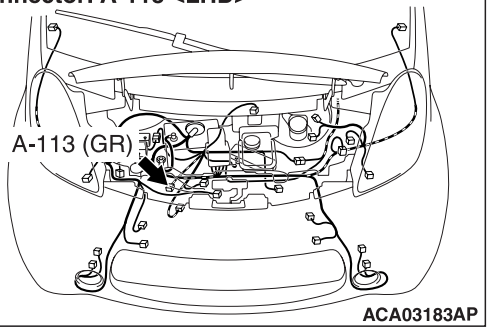

ACA03183AP

Connector: C-22

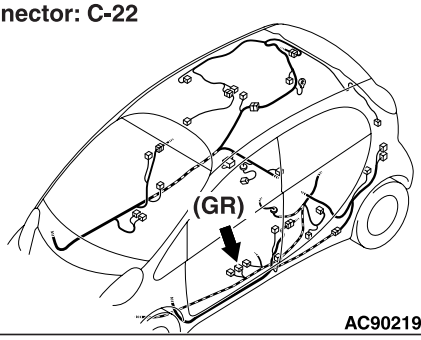

AC902191AO

Connector: A-113 <RHD>

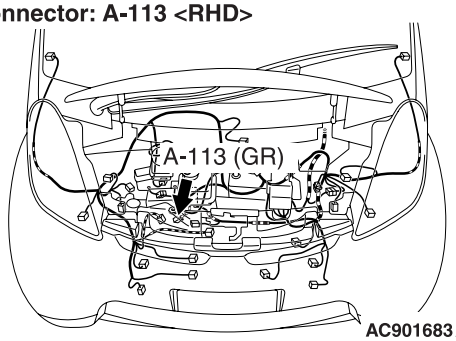

AC901683AV

Connector: C-111, C-113
Rear floor lower part

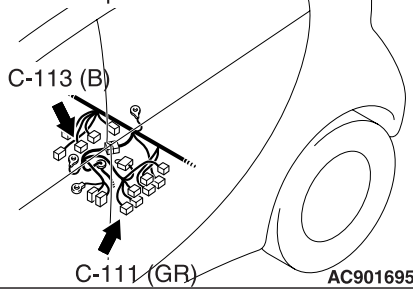

AC901695BH

To Attached sheet 18 (1/11－6/11)

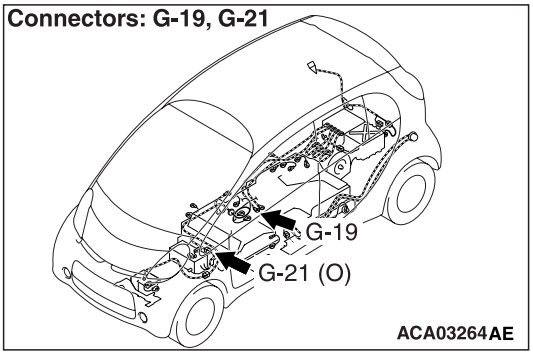

⚠ *DANGER*

- ***When servicing the high voltage system parts, always shut off the high voltage by removing the service plug (refer to).***
- ***When servicing the high voltage system parts, always wear the protective equipment or armour to measure the high voltage (refer to).***

⚠ CAUTION

If there is any problem in the CAN bus lines, an incorrect diagnosis code may be set. Prior to this diagnosis, always diagnose the CAN bus lines (Refer to GROUP 54C – CAN Bus Diagnostics Table).

OPERATION

- The main contactors (+) and (-) the charging contactor inside the main battery, which are controlled by the EV-ECU, activate and deactivate the high-voltage circuit. The EV-ECU monitors the voltage in the smoothing condenser in the EMCU.

DIAGNOSIS CODE SET CONDITIONS

- If a seizure of the charging contactor or main contactor (+) is determined when the high-voltage circuit is activated, the diagnosis code No. P0AE2 will be set.

PROBABLE CAUSES

- Damaged wiring harness or connector(s)
- Malfunction of the main battery assembly
- Malfunction of the EV-ECU
- Malfunction of the EV water PTC heater
- Malfunction of the A/C compressor
- Malfunction of the onboard charger/DC-DC converter
- Malfunction of the EMCU

DIAGNOSIS PROCEDURE

STEP 1. M.U.T.-III CAN bus diagnosis

Use the M.U.T.-III to diagnose the CAN bus lines.

Q: Is the check result normal?
YES : Go to Step 3.
NO : Repair the CAN bus line. (Refer to GROUP 54C – Troubleshooting .) Then go to Step 2.

STEP 2. Diagnosis code recheck after resetting CAN bus lines

Check again if the diagnosis code No. P0AE2 is set to the EV-ECU.
(1) Erase the stored diagnosis code.
(2) Set the electric motor switch from the "LOCK" (OFF) position to the "ON", and then to the "START" position temporarily.
(3) Check if the diagnosis code is set.

Q: Is the diagnosis code set?
YES : Go to Step 3.
NO : This diagnosis is complete.

STEP 3. Connector check: C-22 main battery connector, C-111 EV-ECU connector

Q: Is the check result normal?
YES : Go to Step 4.
NO : Repair the damaged connector.

STEP 4. Check the wiring harness between C-111 EV-ECU connector terminal No. 105 and C-22 main battery connector terminal No. 7.

Check the output lines for open circuit and short to earth.

Q: Is the check result normal?
YES : Go to Step 5.
NO : Repair the wiring harness.

To Attached sheet 18 (1/11－6/11)

STEP 5. Voltage measurement at G-19 high-voltage connector, service plug

⚠ ***DANGER***

Carry out the check on the high-voltage circuit while reading carefully the precautions on handling a high-voltage vehicle.

⚠ ***DANGER***

Be sure to wear the specified protective equipment when removing the service plug.

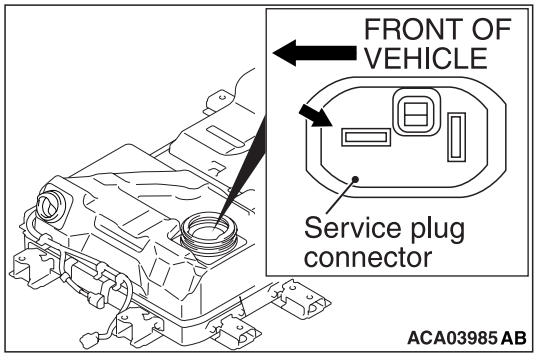

(1) Using a high voltage multimeter, measure the high voltage between the G-19 connection terminal and service plug forward terminal.

OK: 0 V

Q: Is the check result normal?
YES : Go to Step 6.
NO : Go to Step 14.

STEP 6. Use M.U.T.-III diagnosis code of other.

Check if the diagnosis code except No. P1A16 or P1A26 is set to the EV-ECU.

Q: Is the diagnosis code set?
YES : Carry out troubleshooting for the diagnosis code.
NO : Go to Step 7.

STEP 7. Use M.U.T.-III diagnosis code of other systems.

Check if the DTC is set to the A/C control unit.

Q: Is the diagnosis code set?
YES : Carry out troubleshooting for the diagnosis code.
NO : Go to Step 8.

STEP 8. Measure the resistance of the G-21 EV water PTC heater connector.

⚠ ***DANGER***

Carry out the check on the high-voltage circuit while reading carefully the precautions on handling a high-voltage vehicle.

⚠ ***DANGER***

Wear the specified protection equipment during the check.

(1) Remove the service plug.
(2) Disconnect the G-21 EV water PTC heater connector.
(3) Measure it on the resistance at the EV water PTC heater side.
(4) Measure the resistance between the G-21 EV water PTC heater connector terminal No.1 and No.2.

OK: 1 MΩ or more

Q: Is the check result normal?
YES : Go to Step 9.
NO : Check the high-voltage fuse No.3 (Refer to). Replace the EV water PTC heater (Refer to GROUP 55 - EV Water PTC Heater).

STEP 9. Measure the resistance at A-113 EV water PTC heater connector.

(1) Disconnect the A-113 EV water PTC heater connector and measure it on the resistance at the EV water PTC heater side.
(2) Measure the resistance between the A-113 EV water PTC heater connector terminal No3, 4, 5 and the body earth.

OK: No continuity

Q: Is the check result normal?
YES : Go to Step 10.
NO : Replace the EV water PTC heater (Refer to GROUP 55 - EV Water PTC Heater).

STEP 10. Measure the resistance at A-113 EV water PTC heater connector.

(1) Disconnect the A-113 EV water PTC heater connector and measure it on the resistance at the wiring harness side.
(2) Measure the resistance between the A-113 EV water PTC heater connector terminal No.3, 4, 5 and the body earth.

OK: No continuity

Q: Is the check result normal?
YES : Go to Step 13.
NO : Go to Step 11.

STEP 11. Connector check: A-113 EV water PTC heater connector, B-01 joint connector, C-113 A/C control unit connector.

Q: Is the check result normal?
YES : Go to Step 12.
NO : Repair the damaged connector.

STEP 12. Check the wiring harness between A-113 EV water PTC heater connector terminal No. 3, 4, 5 and C-113 A/C control unit connector terminal No. 34, 35, 36.
Check the signal line for short circuit.

Q: Is the check result normal?
YES : Replace the A/C control unit (Refer to GROUP 55 - A/C Control Unit).
NO : Repair the wiring harness.

STEP 13. Diagnosis code recheck
Check again if the diagnosis code is set to the EV-ECU.
(1) Erase the stored diagnosis code.
(2) Set the electric motor switch from the "LOCK" (OFF) position to the "ON", and then to the "START" position temporarily.
(3) Check if the diagnosis code is set.

Q: Is the diagnosis code set?
YES : Replace the EV-ECU (Refer to). Then go to Step 14.
NO : Intermittent malfunction (Refer to GROUP 00 – How to Use Troubleshooting/ Inspection Service Points - How to Cope with Intermittent Malfunction).

STEP 14. Diagnosis code recheck
Check again if the diagnosis code is set to the EV-ECU.
(1) Erase the stored diagnosis code.
(2) Set the electric motor switch from the "LOCK" (OFF) position to the "ON", and then to the "START" position temporarily.
(3) Check if the diagnosis code is set.

Q: Is the diagnosis code set?
YES : Replace the main battery assembly (Refer to). Then go to Step 15.
NO : The diagnosis is complete.

STEP 15. Diagnosis code recheck
Check again if the diagnosis code is set to the EV-ECU.
(1) Erase the stored diagnosis code.
(2) Set the electric motor switch from the "LOCK" (OFF) position to the "ON", and then to the "START" position temporarily.
(3) Check if the diagnosis code is set.

Q: Is the diagnosis code set?
YES : Return to Step 1.
NO : The diagnosis is complete.

Code No. P1A15: High-voltage system error (1)

REGULAR CHARGING CONTROL SYSTEM CIRCUIT

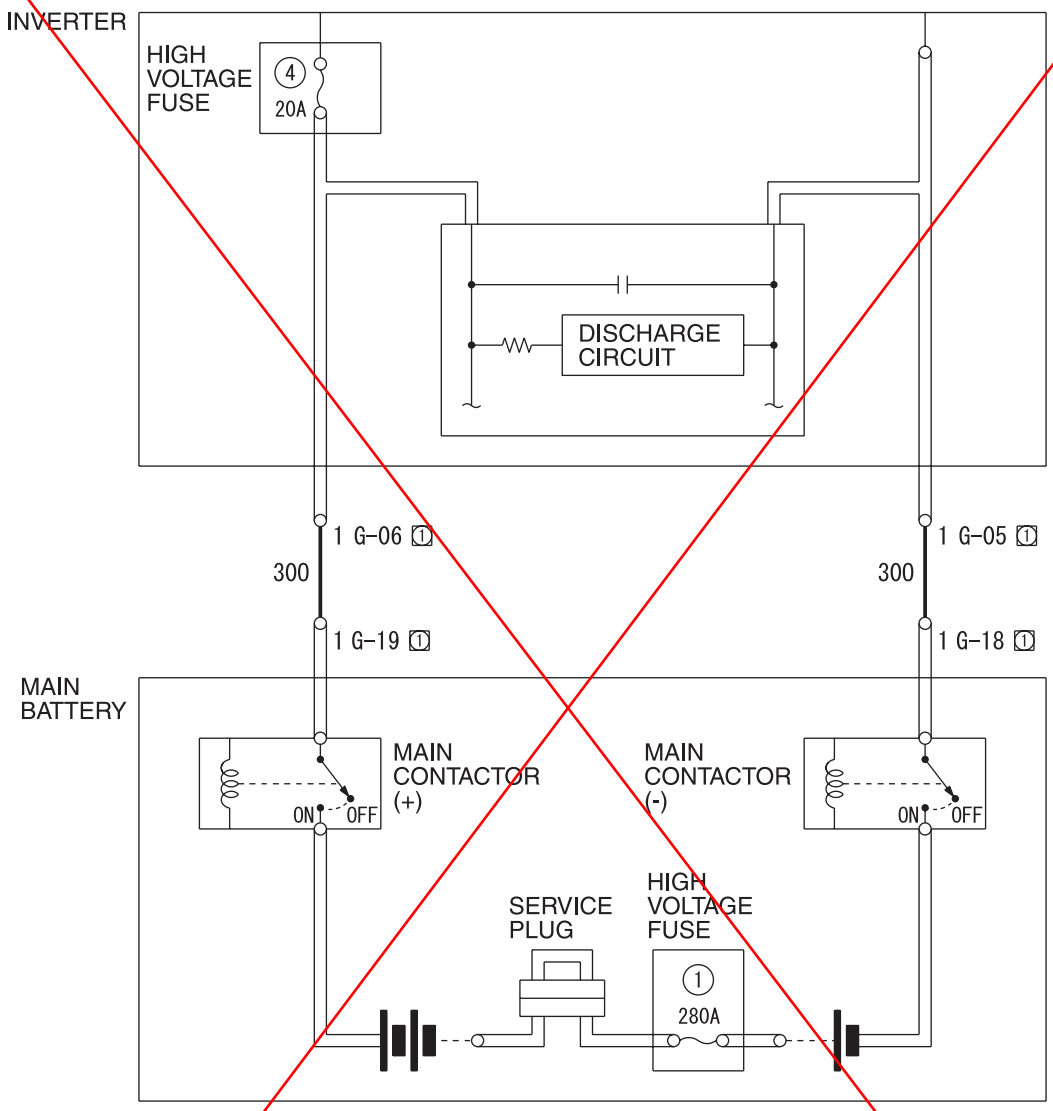

Wire colour code
B : Black LG : Light green G : Green L : Blue W : White Y : Yellow SB : Sky blue
BR : Brown O : Orange GR : Grey R : Red P : Pink V : Violet PU : Purple SI : Silver

ACA03511

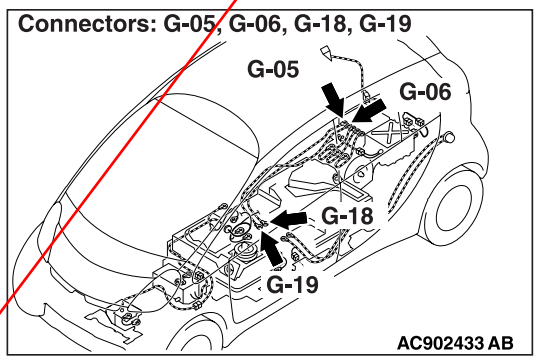

OPERATION

The high-voltage circuit activation and shutdown are controlled by the EV-ECU. The EV-ECU also monitors the voltage of the smooth condenser in the MCU via the CAN communication.

DIAGNOSIS CODE SET CONDITIONS

- If the charging time of the smooth condenser in the MCU reaches the specified time or more, the diagnosis code No. P1A15 will be set.

PROBABLE CAUSES

- Damaged wiring harness or connector(s)
- Malfunction of the high-voltage fuse No.1 (Main, 280A) (main battery assembly)
- Malfunction of the main battery assembly
- Malfunction of the MCU

DIAGNOSIS PROCEDURE

STEP 1. M.U.T.-III CAN bus diagnosis

Use the M.U.T.-III to diagnose the CAN bus lines.

Q: Is the check result normal?

YES : Go to Step 3.

NO : Repair the CAN bus line. (Refer to GROUP 54C – Troubleshooting .) Then go to Step 2.

STEP 2. Diagnosis code recheck after resetting CAN bus lines

Check again if the diagnosis code No. P1A15 is set to the EV-ECU.

(1) Erase the stored diagnosis code.
(2) Set the electric motor switch from the "LOCK" (OFF) position to the "ON" position.
(3) Set the electric motor switch to the "START" position, and start the electric motor unit.
(4) Check if the diagnosis code is set.

Q: Is the diagnosis code set?

YES : Go to Step 3.

NO : This diagnosis is complete.

STEP 3. High-voltage fuse No.1 (Main,280A) (main battery assembly) check

Check the high-voltage fuse No.1 (Main, 280A). (Refer to .)

Q: Is the check result normal?

YES : Go to Step 4.

NO : Replace the high-voltage fuse No.1 (Main, 280A).

STEP 4. Connector check: G-18, G-19 main battery connector, G-05, G-06 MCU connector

⚠ ***DANGER***

When servicing the high voltage system parts, always shut off the high voltage by removing the service plug (refer to).

⚠ ***DANGER***

Be sure to wear the specified protective equipment when removing the service plug.

Q: Is the check result normal?

YES : Go to Step 5.

NO : Replace the wiring harness.

STEP 5. Check the wiring harness between G-05, G-06 MCU connector terminal and G-18, G-19 main battery connector terminal.

⚠ ***DANGER***

When servicing the high voltage system parts, always shut off the high voltage by removing the service plug (refer to).

⚠ ***DANGER***

Be sure to wear the specified protective equipment when removing the service plug.

Check the high-voltage line for open circuit.

Q: Is the check result normal?

YES : Go to Step 6.

NO : Replace the wiring harness.

STEP 6. Diagnosis code recheck

Check again if the diagnosis code is set to the EV-ECU.

(1) Erase the stored diagnosis code.
(2) Set the electric motor switch from the "LOCK" (OFF) position to the "ON" position.
(3) Set the electric motor switch to the "START" position, and start the electric motor unit.
(4) Check if the diagnosis code is set.

Q: Is the diagnosis code set?

YES : Replace the main battery assembly. (Refer to .) Then go to Step 7.

NO : Intermittent malfunction (Refer to GROUP 00 – How to Use Troubleshooting/ Inspection Service Points - How to Cope with Intermittent Malfunction .)

STEP 7. Diagnosis code recheck

Check again if the diagnosis code is set to the EV-ECU.

(1) Erase the stored diagnosis code.
(2) Set the electric motor switch from the "LOCK" (OFF) position to the "ON" position.
(3) Set the electric motor switch to the "START" position, and start the electric motor unit.
(4) Check if the diagnosis code is set.

Q: Is the diagnosis code set?

YES : Return to Step 1.

NO : The diagnosis is complete.

Code No. P1A15: High-voltage system error (1)

REGULAR CHARGING CONTROL SYSTEM CIRCUIT

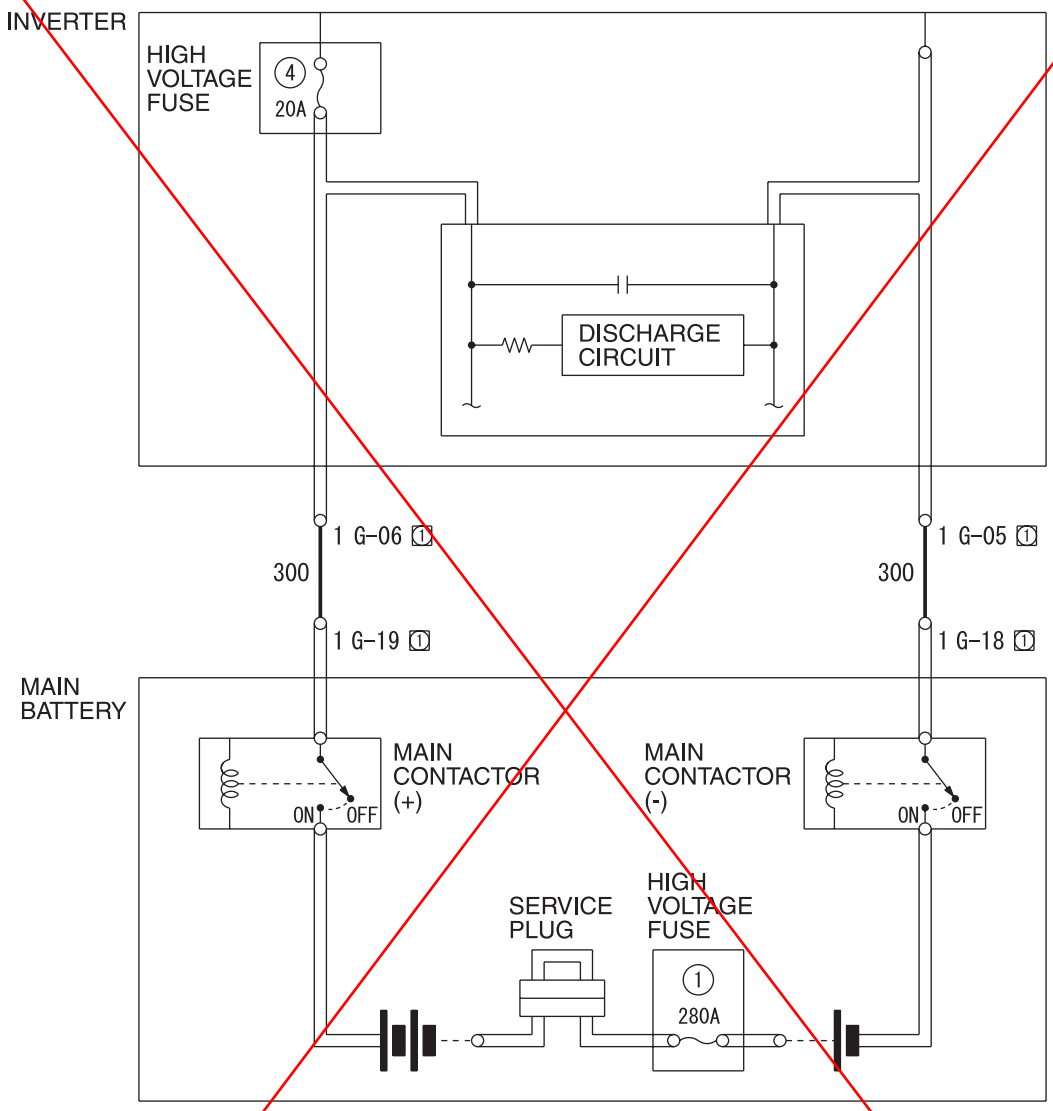

Wire colour code
B : Black LG : Light green G : Green L : Blue W : White Y : Yellow SB : Sky blue
BR : Brown O : Orange GR : Grey R : Red P : Pink V : Violet PU : Purple SI : Silver

ACA03511

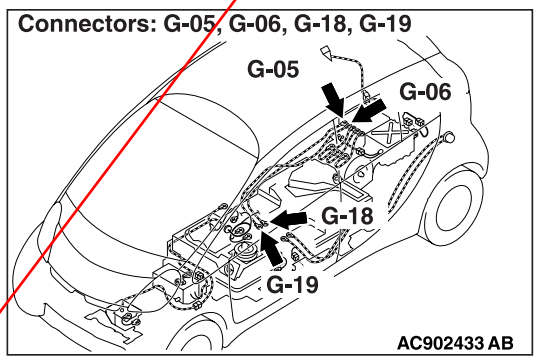

OPERATION

The high-voltage circuit activation and shutdown are controlled by the EV-ECU. The EV-ECU also monitors the voltage of the smooth condenser in the EMCU via the CAN communication.

DIAGNOSIS CODE SET CONDITIONS

- If the charging time of the smooth condenser in the EMCU reaches the specified time or more, the diagnosis code No. P1A15 will be set.

PROBABLE CAUSES

- Damaged wiring harness or connector(s)
- Malfunction of the high-voltage fuse No.1 (Main, 280A) (main battery assembly)
- Malfunction of the main battery assembly
- Malfunction of the EMCU

DIAGNOSIS PROCEDURE

STEP 1. M.U.T.-III CAN bus diagnosis

Use the M.U.T.-III to diagnose the CAN bus lines.

Q: Is the check result normal?

YES : Go to Step 3.

NO : Repair the CAN bus line. (Refer to GROUP 54C – Troubleshooting .) Then go to Step 2.

STEP 2. Diagnosis code recheck after resetting CAN bus lines

Check again if the diagnosis code No. P1A15 is set to the EV-ECU.

(1) Erase the stored diagnosis code.
(2) Set the electric motor switch from the "LOCK" (OFF) position to the "ON" position.
(3) Set the electric motor switch to the "START" position, and start the electric motor unit.
(4) Check if the diagnosis code is set.

Q: Is the diagnosis code set?

YES : Go to Step 3.

NO : This diagnosis is complete.

STEP 3. High-voltage fuse No.1 (Main,280A) (main battery assembly) check

Check the high-voltage fuse No.1 (Main, 280A). (Refer to .)

Q: Is the check result normal?

YES : Go to Step 4.

NO : Replace the high-voltage fuse No.1 (Main, 280A).

STEP 4. Connector check: G-18, G-19 main battery connector, G-05, G-06 inverter connector

⚠ ***DANGER***

When servicing the high voltage system parts, always shut off the high voltage by removing the service plug (refer to).

⚠ ***DANGER***

Be sure to wear the specified protective equipment when removing the service plug.

Q: Is the check result normal?

YES : Go to Step 5.

NO : Replace the wiring harness.

STEP 5. Check the wiring harness between G-05, G-06 inverter connector terminal and G-18, G-19 main battery connector terminal.

⚠ ***DANGER***

When servicing the high voltage system parts, always shut off the high voltage by removing the service plug (refer to).

⚠ ***DANGER***

Be sure to wear the specified protective equipment when removing the service plug.

Check the high-voltage line for open circuit.

Q: Is the check result normal?

YES : Go to Step 6.

NO : Replace the wiring harness.

STEP 6. Diagnosis code recheck

Check again if the diagnosis code is set to the EV-ECU.

(1) Erase the stored diagnosis code.
(2) Set the electric motor switch from the "LOCK" (OFF) position to the "ON" position.
(3) Set the electric motor switch to the "START" position, and start the electric motor unit.
(4) Check if the diagnosis code is set.

Q: Is the diagnosis code set?

YES : Go to Step 7.

NO : Intermittent malfunction (Refer to GROUP 00 – How to Use Troubleshooting/ Inspection Service Points - How to Cope with Intermittent Malfunction .)

STEP 7. M.U.T.-III freeze frame (FFD) data

Check the freeze frame data.

Freeze frame data

- Item No. 15 : EMCU: Condenser voltage

OK: 220 V or more

Q: Is the check result normal?

YES : Replace the inverter. (Refer to .) Then go to Step 8.

NO : Replace the main battery assembly. (Refer to .) Then go to Step 8.

STEP 8. Diagnosis code recheck

Check again if the diagnosis code is set to the EV-ECU.

(1) Erase the stored diagnosis code.
(2) Set the electric motor switch from the "LOCK"

(OFF) position to the "ON" position.
(3) Set the electric motor switch to the "START" position, and start the electric motor unit.
(4) Check if the diagnosis code is set.

Q: Is the diagnosis code set?
YES : Return to Step 1.
NO : The diagnosis is complete.

Code No. P1A16: High-voltage system error (2)

⚠ CAUTION
If there is any problem in the CAN bus lines, an incorrect diagnosis code may be set. Prior to this diagnosis, always diagnose the CAN bus lines.

OPERATION
The high-voltage circuit activation and shutdown are controlled by the EV-ECU. The EV-ECU also monitors the voltage of the smooth condenser in the EMCU via the CAN communication.

DIAGNOSIS CODE SET CONDITIONS
- If the discharging time of the smooth condenser in the EMCU reaches the specified time or more, the diagnosis code No. P1A16 will be set.

PROBABLE CAUSES
- Malfunction of the EMCU
- Malfunction of the EV-ECU

DIAGNOSIS PROCEDURE

STEP 1. M.U.T.-III CAN bus diagnosis
Use the M.U.T.-III to diagnose the CAN bus lines.

Q: Is the check result normal?
YES : Go to Step 3.
NO : Repair the CAN bus line. (Refer to GROUP 54C – Troubleshooting .) Then go to Step 2.

STEP 2. Diagnosis code recheck after resetting CAN bus lines
Check again if the diagnosis code No. P1A16 is set to the EV-ECU.
(1) Erase the stored diagnosis code.
(2) Start the electric motor unit, and then set the electric motor switch to the LOCK (OFF) position.
(3) Set the electric motor switch from the LOCK (OFF) position to the ON position.
(4) Check if the diagnosis code is set.

Q: Is the diagnosis code set?
YES : Go to Step 3.
NO : This diagnosis is complete.

STEP 3. Diagnosis code recheck
Check again if the diagnosis code is set to the EV-ECU.
(1) Erase the stored diagnosis code.
(2) Start the electric motor unit, and then set the electric motor switch to the LOCK (OFF) position.
(3) Set the electric motor switch from the LOCK (OFF) position to the ON position.
(4) Check if the diagnosis code is set.

Q: Is the diagnosis code set?
YES : Replace the inverter. (Refer to .) Then go to Step 4.
NO : Intermittent malfunction (Refer to GROUP 00 – How to Use Troubleshooting/ Inspection Service Points - How to Cope with Intermittent Malfunction .)

STEP 4. Diagnosis code recheck
Check again if the diagnosis code is set to the EV-ECU.
(1) Erase the stored diagnosis code.
(2) Start the electric motor unit, and then set the electric motor switch to the LOCK (OFF) position.
(3) Set the electric motor switch from the LOCK (OFF) position to the ON position.
(4) Check if the diagnosis code is set.

Q: Is the diagnosis code set?
YES : Replace the EV-ECU. (Refer to .) Then go to Step 5.
NO : The diagnosis is complete.

STEP 5. Diagnosis code recheck
Check again if the diagnosis code is set to the EV-ECU.
(1) Erase the stored diagnosis code.
(2) Start the electric motor unit, and then set the electric motor switch to the LOCK (OFF) position.
(3) Set the electric motor switch from the LOCK (OFF) position to the ON position.
(4) Check if the diagnosis code is set.

Q: Is the diagnosis code set?
YES : Return to Step 1.
NO : The diagnosis is complete.

Code No. P1A15: High-voltage system error (1)

REGULAR CHARGING CONTROL SYSTEM CIRCUIT

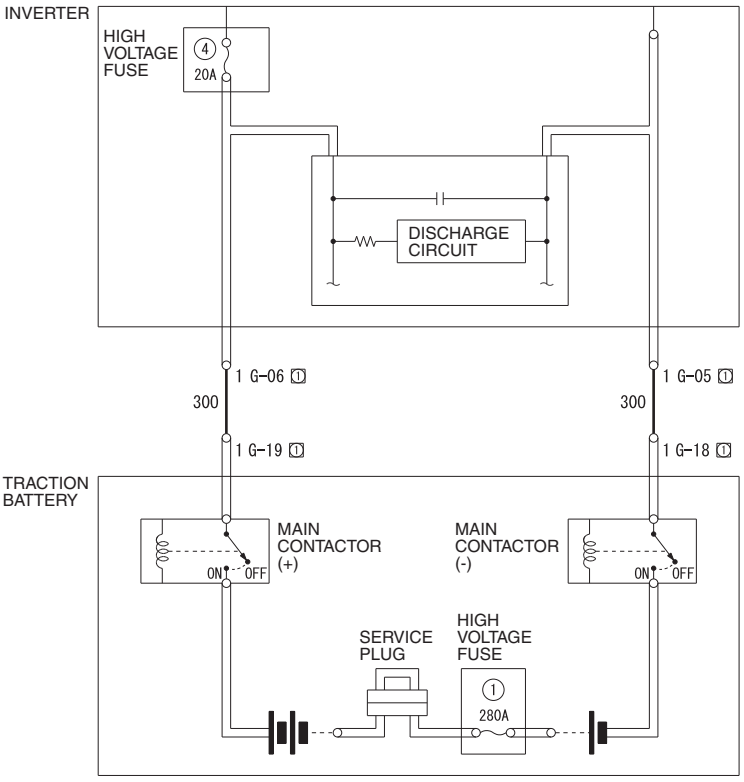

Wire colour code
B : Black LG : Light green G : Green L : Blue W : White Y : Yellow SB : Sky blue
BR : Brown O : Orange GR : Grey R : Red P : Pink V : Violet PU : Purple SI : Silver

ACA03511 AC

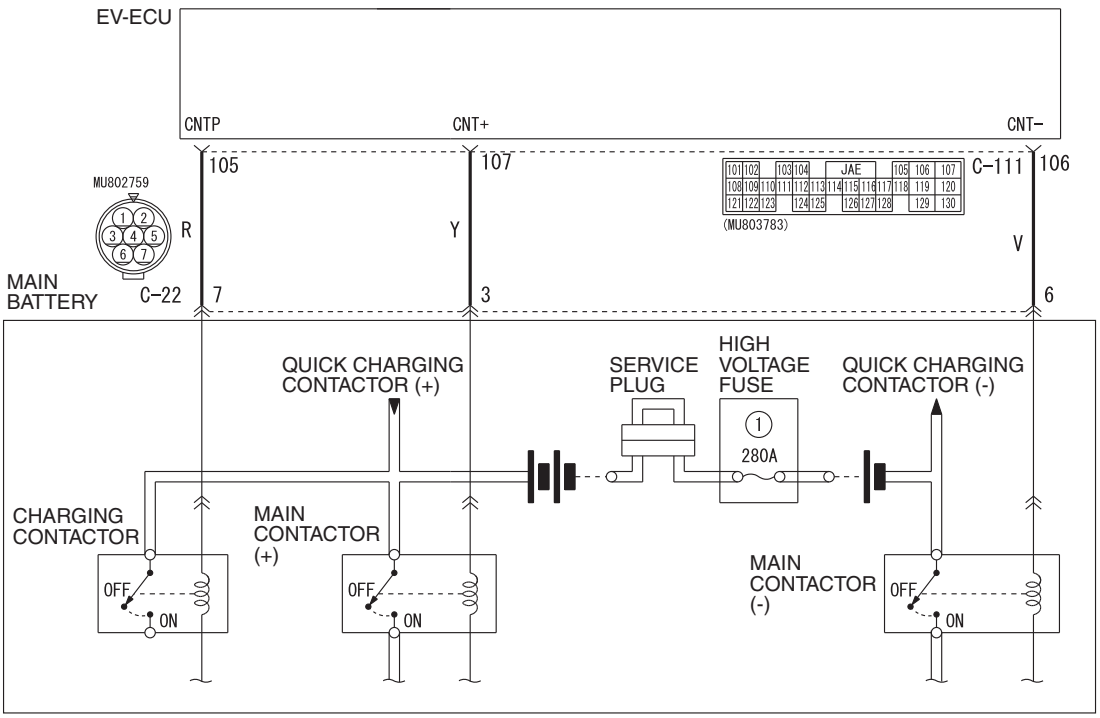

Wire colour code
B : Black LG : Light green G : Green L : Blue W : White Y : Yellow SB : Sky blue
BR : Brown O : Orange GR : Grey R : Red P : Pink V : Violet PU : Purple SI : Silver

ACA03485

To Attached sheet 19 (1/11－5/11)

Attached sheet 19 (7/11)

<New>

A/C Control Circuit

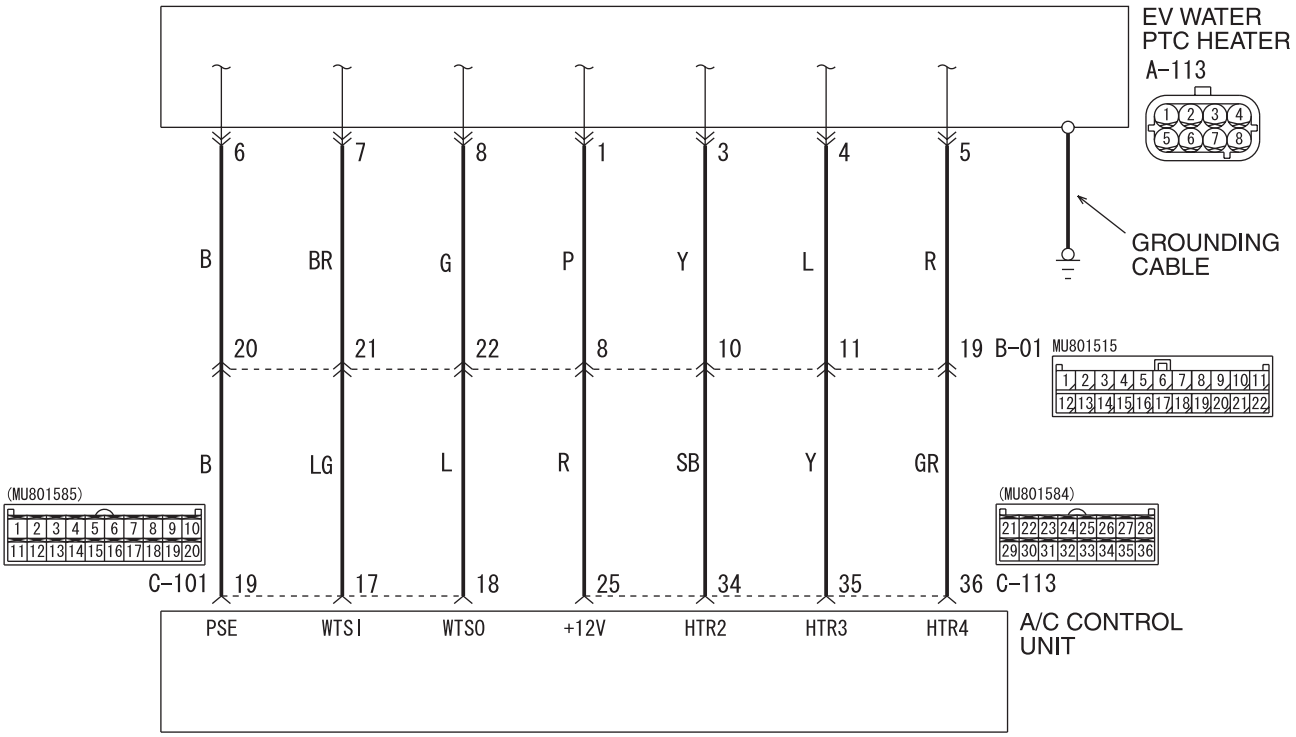

ACC00326
WDT55M008A

Connector: A-113 <LHD>

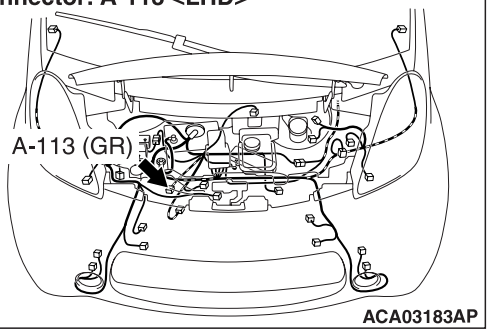

ACA03183AP

Connector: C-22

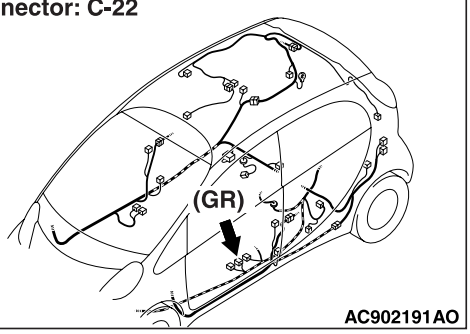

AC902191AO

Connector: A-113 <RHD>

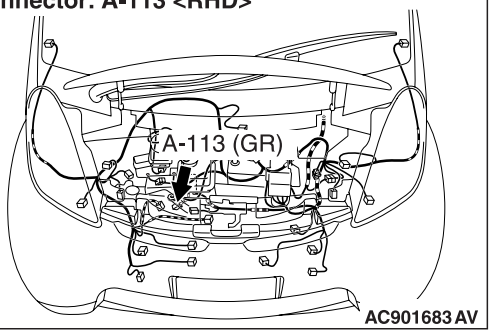

AC901683AV

Connector: C-111, C-113
Rear floor lower part

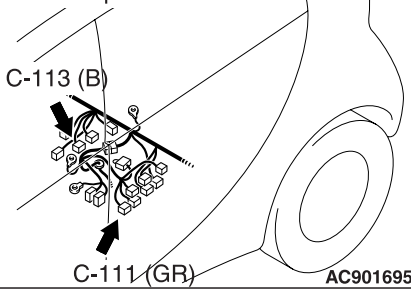

AC901695BH

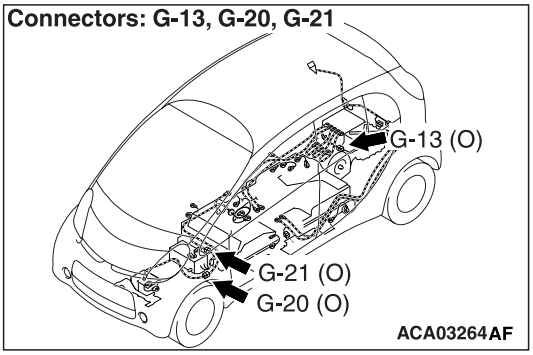

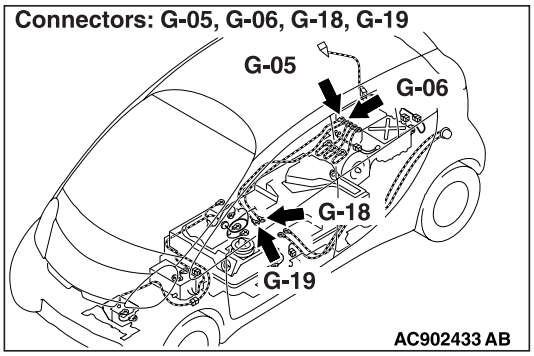

⚠ ***DANGER***

- ***When servicing the high voltage system parts, always shut off the high voltage by removing the service plug (refer to).***
- ***When servicing the high voltage system parts, always wear the protective equipment or armour to measure the high voltage (refer to).***

⚠ **CAUTION**

If there is any problem in the CAN bus lines, an incorrect diagnosis code may be set. Prior to this diagnosis, always diagnose the CAN bus lines (Refer to GROUP 54C – CAN Bus Diagnostics Table).

OPERATION

The high-voltage circuit activation and shutdown are controlled by the EV-ECU. The EV-ECU also monitors the voltage of the smooth condenser in the EMCU via the CAN communication.

DIAGNOSIS CODE SET CONDITIONS

- If the charging time of the smooth condenser in the EMCU reaches the specified time or more when the high-voltage circuit activation, the diagnosis code No. P1A15 will be set.

PROBABLE CAUSES

- Damaged wiring harness or connector(s)
- Malfunction of the high-voltage fuse No.1 (Main, 280A) (main battery assembly)
- Malfunction of the main battery assembly
- Malfunction of the EMCU
- Malfunction of the EV water PTC heater
- Malfunction of the A/C control unit
- Malfunction of the onboard charger/DC-DC converter
- Malfunction of the A/C compressor

DIAGNOSIS PROCEDURE

STEP 1. M.U.T.-III CAN bus diagnosis

Use the M.U.T.-III to diagnose the CAN bus lines.

Q: Is the check result normal?

YES : Go to Step 3.

NO : Repair the CAN bus line. (Refer to GROUP 54C – Troubleshooting .) Then go to Step 2.

STEP 2. Diagnosis code recheck after resetting CAN bus lines

Check again if the diagnosis code No. P1A15 is set to the EV-ECU.

(1) Erase the stored diagnosis code.

(2) Set the electric motor switch from the "LOCK" (OFF) position to the "ON", and then to the "START" position temporarily.

(3) Check if the diagnosis code is set.

Q: Is the diagnosis code set?

YES : Go to Step 3.

NO : This diagnosis is complete.

STEP 3. Use M.U.T.-III diagnosis code of other.

Check if the diagnosis code except No. P0AA1, P1A17 or P1AF2 is set to the EV-ECU.

Q: Is the diagnosis code set?

YES : Carry out troubleshooting for the diagnosis code.

NO : Go to Step 4.

STEP 4. Use M.U.T.-III diagnosis code of other systems.

Check if the diagnosis code is set to the A/C control unit.

Q: Is the diagnosis code set?

YES : Carry out troubleshooting for the diagnosis code.

NO : Go to Step 5.

To Attached sheet 19 (1/11－5/11)

<New>

STEP 5. M.U.T.-III freeze frame (FFD) data
Check the freeze frame data.

Freeze frame data
- Item No. 15 : EMCU: Condenser voltage

OK: 220 V or more

Q: Is the check result normal?
YES : Go to Step 6.
NO : Go to Step 9.

STEP 6. Diagnosis code recheck

⚠ ***DANGER***
Carry out the check on the high-voltage circuit while reading carefully the precautions on handling a high-voltage vehicle.

⚠ ***DANGER***
Wear the specified protection equipment during the check.
Check again if the diagnosis code is set to the EV-ECU.
(1) Remove the service plug.

⚠ ***DANGER***
Isolate bare wires of the disconnected high-voltage circuit with a plastic tape.
(2) Disconnect the G-21 EV water PTC heater connector.
(3) Installation the service plug.
(4) Set the electric motor switch from the "LOCK" (OFF) position to the "ON", and then to the "START" position temporarily.
(5) Check if the diagnosis code is set.

Q: Is the diagnosis code set?
YES : Go to Step 7.
NO : Go to Step 16.

STEP 7. Diagnosis code recheck

⚠ ***DANGER***
Carry out the check on the high-voltage circuit while reading carefully the precautions on handling a high-voltage vehicle.

⚠ ***DANGER***
Wear the specified protection equipment during the check.
Check again if the diagnosis code is set to the EV-ECU.
(1) Remove the service plug.

⚠ ***DANGER***
Isolate bare wires of the disconnected high-voltage circuit with a plastic tape.
(2) Disconnect the G-20 A/C compressor connector.
(3) Installation the service plug.
(4) Set the electric motor switch from the "LOCK" (OFF) position to the "ON", and then to the "START" position temporarily.
(5) Check if the diagnosis code is set.

Q: Is the diagnosis code set?
YES : Go to Step 8.
NO : Replace the A/C compressor (Refer to GROUP 55 - A/C Compressor).

STEP 8. Diagnosis code recheck

⚠ ***DANGER***
Carry out the check on the high-voltage circuit while reading carefully the precautions on handling a high-voltage vehicle.

⚠ ***DANGER***
Wear the specified protection equipment during the check.
Check again if the diagnosis code is set to the EV-ECU.
(1) Remove the service plug.

⚠ ***DANGER***
Isolate bare wires of the disconnected high-voltage circuit with a plastic tape.
(2) Disconnect the G-13 onboard charger/DC-DC converter connector.
(3) Installation the service plug.
(4) Set the electric motor switch from the "LOCK" (OFF) position to the "ON", and then to the "START" position temporarily.
(5) Check if the diagnosis code is set.

Q: Is the diagnosis code set?
YES : Replace the inverter (Refer to). Then go to Step 22.
NO : Replace the onboard charger/DC-DC converter (Refer to).

STEP 9. High-voltage fuse No.1 (Main,280A) (main battery assembly) check
Check the high-voltage fuse No.1 (Main, 280A) (Refer to).

Q: Is the check result normal?
YES : Go to Step 11.
NO : Replace the high-voltage fuse No.1 (Main, 280A). Then go to Step 10.

STEP 10. Use M.U.T.-III diagnosis code of other systems.
Check if the diagnosis code is set to the EMCU.

Q: Is the diagnosis code set?

YES : Carry out troubleshooting for the diagnosis code.
NO : Go to Step 22.

STEP 11. Connector check: G-18, G-19 main battery connector, G-05, G-06 inverter connector

⚠ ***DANGER***
Carry out the check on the high-voltage circuit while reading carefully the precautions on handling a high-voltage vehicle.

⚠ ***DANGER***
Be sure to wear the specified protective equipment when removing the service plug.

- Check whether terminals are engaged correctly (deformation or discolouration).
- Check whether the terminals are tightened to the specified torque (Refer to and).
- Check whether foreign materials are pinched.

Q: Is the check result normal?
Yes: Go to Step 12.
No: Reconnect the terminals or replace the main battery cable.

STEP 12. Check the wiring harness between G-05, G-06 inverter connector terminal and G-18, G-19 main battery connector terminal.

⚠ ***DANGER***
Carry out the check on the high-voltage circuit while reading carefully the precautions on handling a high-voltage vehicle.

⚠ ***DANGER***
Be sure to wear the specified protective equipment when removing the service plug.

Check the high-voltage line for damage.

Q: Is the check result normal?
YES : Go to Step 13.
NO : Replace the main battery cable.

STEP 13. Connector check: C-22 main battery connector, C-111 EV-ECU connector

Q: Is the check result normal?
YES : Go to Step 14.
NO : Repair the damaged connector

STEP 14. Check the wiring harness between C-111 EV-ECU connector terminal No. 105, 106, 107 and C-22 main battery connector terminal No. 3, 6, 7.

Check the signal lines, earth line for open.

Q: Is the check result normal?
YES : Go to Step 15.
NO : Repair the wiring harness.

STEP 15. Check on main contactor (+), (-), charging contactor coil resistance of contactor.

Refer to

Q: Is the check result normal?
YES : Go to Step 16.
NO : Repair the main battery assembly (Refer to).

STEP 16. Measure the resistance of the G-21 EV water PTC heater connector.

⚠ ***DANGER***
Carry out the check on the high-voltage circuit while reading carefully the precautions on handling a high-voltage vehicle.

⚠ ***DANGER***
Wear the specified protection equipment during the check.

(1) Remove the service plug.
(2) Disconnect the G-21 EV water PTC heater connector.
(3) Measure it on the resistance at the EV water PTC heater side.
(4) Measure the resistance between the G-21 EV water PTC heater connector terminal No.1 and No.2.

OK: 1 MΩ or more

Q: Is the check result normal?
YES : Go to Step 17.
NO : Check the high-voltage fuse No.3 (Refer to). Replace the EV water PTC heater (Refer to GROUP 55 - EV Water PTC Heater).

STEP 17. Measure the resistance at A-113 EV water PTC heater connector.

(1) Disconnect the A-113 EV water PTC heater connector and measure it on the resistance at the EV water PTC heater side.
(2) Measure the resistance between the A-113 EV water PTC heater connector terminal No.3, 4, 5 and the body earth.

OK: No continuity

Q: Is the check result normal?
YES : Go to Step 18.
NO : Replace the EV water PTC heater (Refer to GROUP 55 - EV Water PTC Heater).

STEP 18. Measure the resistance at A-113 EV water PTC heater connector.

(1) Disconnect the A-113 EV water PTC heater connector and measure it on the resistance at the wiring harness side.
(2) Measure the resistance between the A-113 EV water PTC heater connector terminal No.3, 4, 5 and the body earth.

OK: No continuity

Q: Is the check result normal?
YES : Go to Step 21.
NO : Go to Step 19.

STEP 19. Connector check: A-113 EV water PTC heater connector, B-01 joint connector, C-113 A/C control unit connector.

Q: Is the check result normal?
YES : Go to Step 20.
NO : Repair the damaged connector.

STEP 20. Check the wiring harness between A-113 EV water PTC heater connector terminal No. 3, 4, 5 and C-113 A/C control unit connector terminal No. 34, 35, 36.

Check the signal line for short circuit.

Q: Is the check result normal?
YES : Replace the A/C control unit.
NO : Repair the wiring harness.

STEP 21. Diagnosis code recheck

Check again if the diagnosis code is set to the EV-ECU.
(1) Erase the stored diagnosis code.
(2) Set the electric motor switch from the "LOCK" (OFF) position to the "ON", and then to the "START" position temporarily.
(3) Check if the diagnosis code is set.

Q: Is the diagnosis code set?
YES : Replace the main battery assembly (Refer to). Then go to Step 22.
NO : Intermittent malfunction (Refer to GROUP 00 – How to Use Troubleshooting/ Inspection Service Points, How to Cope with Intermittent Malfunctions).

STEP 22. Diagnosis code recheck

Check again if the diagnosis code is set to the EV-ECU.
(1) Erase the stored diagnosis code.
(2) Set the electric motor switch from the "LOCK" (OFF) position to the "ON", and then to the "START" position temporarily.
(3) Check if the diagnosis code is set.

Q: Is the diagnosis code set?
YES : Return to Step 1.
NO : The diagnosis is complete.

Code No. P1A16: High-voltage system error (2)

⚠ CAUTION
If there is any problem in the CAN bus lines, an incorrect diagnosis code may be set. Prior to this diagnosis, always diagnose the CAN bus lines.

OPERATION
The high-voltage circuit activation and shutdown are controlled by the EV-ECU. The EV-ECU also monitors the voltage of the smooth condenser in the MCU via the CAN communication.

DIAGNOSIS CODE SET CONDITIONS
- If the discharging time of the smooth condenser in the MCU reaches the specified time or more, the diagnosis code No. P1A16 will be set.

PROBABLE CAUSES
- Malfunction of the MCU
- Malfunction of the EV-ECU

DIAGNOSIS PROCEDURE

STEP 1. M.U.T.-III CAN bus diagnosis
Use the M.U.T.-III to diagnose the CAN bus lines.

Q: Is the check result normal?
YES : Go to Step 3.
NO : Repair the CAN bus line. (Refer to GROUP 54C – Troubleshooting .) Then go to Step 2.

STEP 2. Diagnosis code recheck after resetting CAN bus lines
Check again if the diagnosis code No. P1A16 is set to the EV-ECU.
(1) Erase the stored diagnosis code.
(2) Start the electric motor unit, and then set the electric motor switch to the LOCK (OFF) position.
(3) Set the electric motor switch from the LOCK (OFF) position to the ON position.
(4) Check if the diagnosis code is set.

Q: Is the diagnosis code set?
YES : Go to Step 3.
NO : This diagnosis is complete.

STEP 3. Diagnosis code recheck
Check again if the diagnosis code is set to the EV-ECU.
(1) Erase the stored diagnosis code.
(2) Start the electric motor unit, and then set the electric motor switch to the LOCK (OFF) position.
(3) Set the electric motor switch from the LOCK (OFF) position to the ON position.
(4) Check if the diagnosis code is set.

Q: Is the diagnosis code set?
YES : Replace the MCU. (Refer to .) Then go to Step 4.
NO : Intermittent malfunction (Refer to GROUP 00 – How to Use Troubleshooting/ Inspection Service Points - How to Cope with Intermittent Malfunction .)

STEP 4. Diagnosis code recheck
Check again if the diagnosis code is set to the EV-ECU.
(1) Erase the stored diagnosis code.
(2) Start the electric motor unit, and then set the electric motor switch to the LOCK (OFF) position.
(3) Set the electric motor switch from the LOCK (OFF) position to the ON position.
(4) Check if the diagnosis code is set.

Q: Is the diagnosis code set?
YES : Replace the EV-ECU. (Refer to .) Then go to Step 5.
NO : The diagnosis is complete.

STEP 5. Diagnosis code recheck
Check again if the diagnosis code is set to the EV-ECU.
(1) Erase the stored diagnosis code.
(2) Start the electric motor unit, and then set the electric motor switch to the LOCK (OFF) position.
(3) Set the electric motor switch from the LOCK (OFF) position to the ON position.
(4) Check if the diagnosis code is set.

Q: Is the diagnosis code set?
YES : Return to Step 1.
NO : The diagnosis is complete.

Replace with attached sheets 20 (3/3)

<New>

Attached sheet 20 (2/3)

(OFF) position to the "ON" position.
(3) Set the electric motor switch to the "START" position, and start the electric motor unit.
(4) Check if the diagnosis code is set.

Q: Is the diagnosis code set?
YES : Return to Step 1.
NO : The diagnosis is complete.

<Old>

12 MODEL

Code No. P1A16: High-voltage system error (2)

⚠ CAUTION
If there is any problem in the CAN bus lines, an incorrect diagnosis code may be set. Prior to this diagnosis, always diagnose the CAN bus lines.

OPERATION
The high-voltage circuit activation and shutdown are controlled by the EV-ECU. The EV-ECU also monitors the voltage of the smooth condenser in the EMCU via the CAN communication.

DIAGNOSIS CODE SET CONDITIONS
- If the discharging time of the smooth condenser in the EMCU reaches the specified time or more, the diagnosis code No. P1A16 will be set.

PROBABLE CAUSES
- Malfunction of the EMCU
- Malfunction of the EV-ECU

DIAGNOSIS PROCEDURE

STEP 1. M.U.T.-III CAN bus diagnosis
Use the M.U.T.-III to diagnose the CAN bus lines.

Q: Is the check result normal?
YES : Go to Step 3.
NO : Repair the CAN bus line. (Refer to GROUP 54C – Troubleshooting .) Then go to Step 2.

STEP 2. Diagnosis code recheck after resetting CAN bus lines
Check again if the diagnosis code No. P1A16 is set to the EV-ECU.
(1) Erase the stored diagnosis code.
(2) Start the electric motor unit, and then set the electric motor switch to the LOCK (OFF) position.
(3) Set the electric motor switch from the LOCK (OFF) position to the ON position.
(4) Check if the diagnosis code is set.

Q: Is the diagnosis code set?
YES : Go to Step 3.
NO : This diagnosis is complete.

STEP 3. Diagnosis code recheck
Check again if the diagnosis code is set to the EV-ECU.
(1) Erase the stored diagnosis code.
(2) Start the electric motor unit, and then set the electric motor switch to the LOCK (OFF) position.
(3) Set the electric motor switch from the LOCK (OFF) position to the ON position.
(4) Check if the diagnosis code is set.

Q: Is the diagnosis code set?
YES : Replace the inverter. (Refer to .) Then go to Step 4.
NO : Intermittent malfunction (Refer to GROUP 00 – How to Use Troubleshooting/ Inspection Service Points - How to Cope with Intermittent Malfunction .)

STEP 4. Diagnosis code recheck
Check again if the diagnosis code is set to the EV-ECU.
(1) Erase the stored diagnosis code.
(2) Start the electric motor unit, and then set the electric motor switch to the LOCK (OFF) position.
(3) Set the electric motor switch from the LOCK (OFF) position to the ON position.
(4) Check if the diagnosis code is set.

Q: Is the diagnosis code set?
YES : Replace the EV-ECU. (Refer to .) Then go to Step 5.
NO : The diagnosis is complete.

STEP 5. Diagnosis code recheck
Check again if the diagnosis code is set to the EV-ECU.
(1) Erase the stored diagnosis code.
(2) Start the electric motor unit, and then set the electric motor switch to the LOCK (OFF) position.
(3) Set the electric motor switch from the LOCK (OFF) position to the ON position.
(4) Check if the diagnosis code is set.

Q: Is the diagnosis code set?
YES : Return to Step 1.
NO : The diagnosis is complete.

To Attached sheet 20 (1/3－2/3)

Code No. P1A16: High-voltage system error (2)

⚠ CAUTION
If there is any problem in the CAN bus lines, an incorrect diagnosis code may be set. Prior to this diagnosis, always diagnose the CAN bus lines (Refer to GROUP 54C – CAN Bus Diagnostics Table).

OPERATION
The high-voltage circuit activation and shutdown are controlled by the EV-ECU. The EV-ECU also monitors the voltage of the smooth condenser in the EMCU via the CAN communication.

DIAGNOSIS CODE SET CONDITIONS
- If the discharging time of the smooth condenser in the EMCU reaches the specified time or more when the high-voltage circuit is shut down, the diagnosis code No. P1A16 will be set.

PROBABLE CAUSES
- Malfunction of the EMCU
- Malfunction of the EV-ECU
- Damaged wiring harness or connector(s)
- Malfunction of the EV water PTC heater
- Malfunction of the A/C control unit
- Malfunction of the A/C compressor
- Malfunction of the onboard charger/DC-DC converter
- Malfunction of the main battery assembly

DIAGNOSIS PROCEDURE

STEP 1. M.U.T.-III CAN bus diagnosis
Use the M.U.T.-III to diagnose the CAN bus lines.

Q: Is the check result normal?
YES : Go to Step 3.
NO : Repair the CAN bus line (Refer to GROUP 54C – Troubleshooting). Then go to Step 2.

STEP 2. Diagnosis code recheck after resetting CAN bus lines
Check again if the diagnosis code No. P1A16 is set to the EV-ECU.
(1) Erase the stored diagnosis code.
(2) Set the electric motor switch from the "LOCK" (OFF) position to the "ON", and then to the "START" position temporarily.
(3) After the electric motor switch from the "LOCK" (OFF) position, reset the electric motor switch from the "LOCK" (OFF) position to the "ON" position.
(4) Check if the diagnosis code is set.

Q: Is the diagnosis code set?
YES : Go to Step 3.
NO : This diagnosis is complete.

STEP 3. Use M.U.T.-III diagnosis code of other.
Check if the diagnosis code No. P0AA1, P0AA2, P0AE2 or P1A15 is set to the EV-ECU.

Q: Is the diagnosis code set?
YES : Carry out troubleshooting for the diagnosis code.
NO : Go to Step 4.

STEP 4. Diagnosis code recheck
Check again if the diagnosis code is set to the EV-ECU.
(1) Erase the stored diagnosis code.
(2) Set the electric motor switch from the "LOCK" (OFF) position to the "ON", and then to the "START" position temporarily.
(3) After the electric motor switch from the "LOCK" (OFF) position, reset the electric motor switch from the "LOCK" (OFF) position to the "ON" position.
(4) Check if the diagnosis code is set.

Q: Is the diagnosis code set?
YES : Replace the inverter (Refer to). Then go to Step 5.
NO : Intermittent malfunction (Refer to GROUP 00 – How to Use Troubleshooting/ Inspection Service Points - How to Cope with Intermittent Malfunction).

STEP 5. Diagnosis code recheck
Check again if the diagnosis code is set to the EV-ECU.
(1) Erase the stored diagnosis code.
(2) Set the electric motor switch from the "LOCK" (OFF) position to the "ON", and then to the "START" position temporarily.
(3) After the electric motor switch from the "LOCK" (OFF) position, reset the electric motor switch from the "LOCK" (OFF) position to the "ON" position.
(4) Check if the diagnosis code is set.

Q: Is the diagnosis code set?
YES : Return to Step 1.
NO : The diagnosis is complete.

Code No. P1A17: High-voltage system error (3)

⚠ CAUTION
If there is any problem in the CAN bus lines, an incorrect diagnosis code may be set. Prior to this diagnosis, always diagnose the CAN bus lines.

REGULAR CHARGING CONTROL SYSTEM CIRCUIT

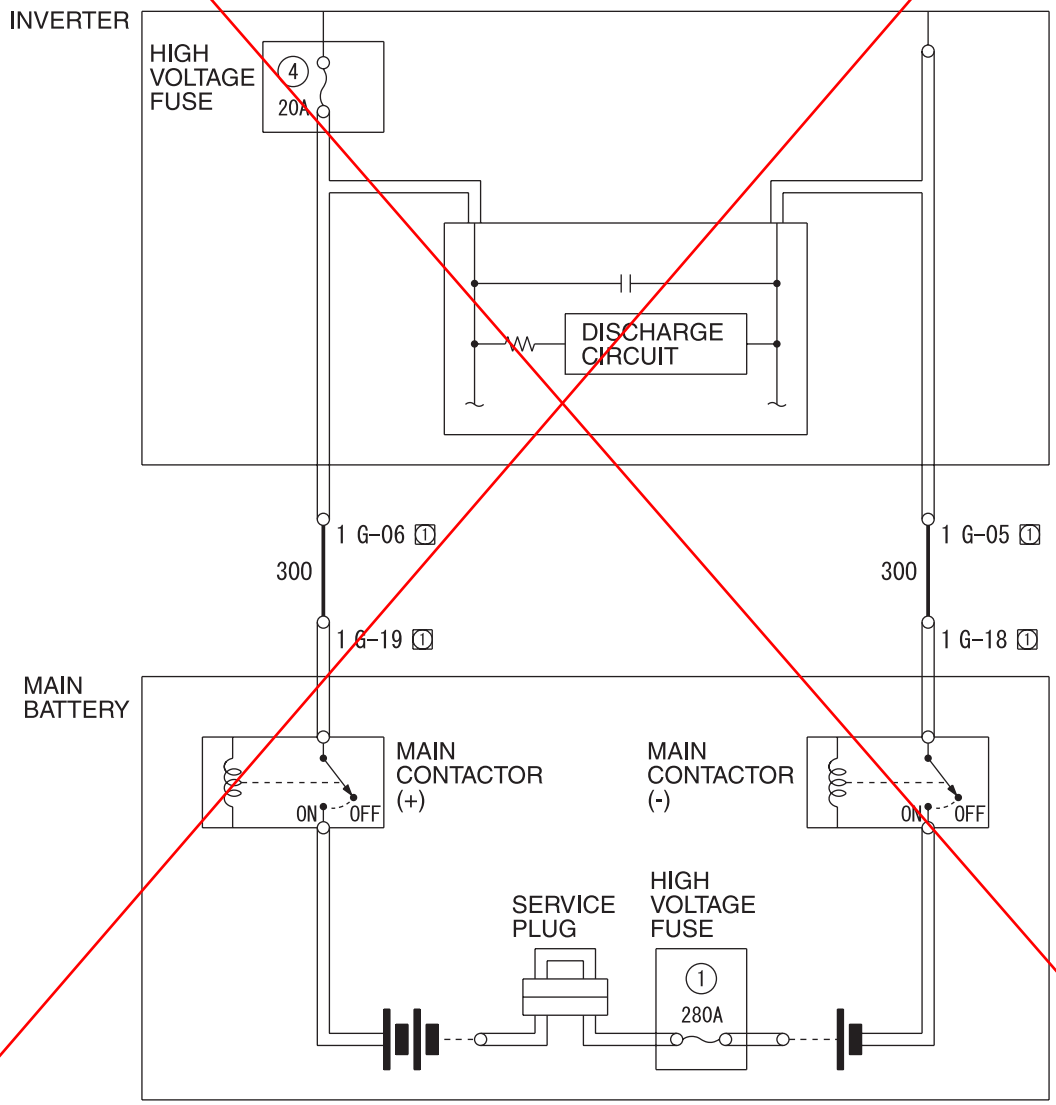

Wire colour code
B : Black LG : Light green G : Green L : Blue W : White Y : Yellow SB : Sky blue
BR : Brown O : Orange GR : Grey R : Red P : Pink V : Violet PU : Purple SI : Silver

ACA03511

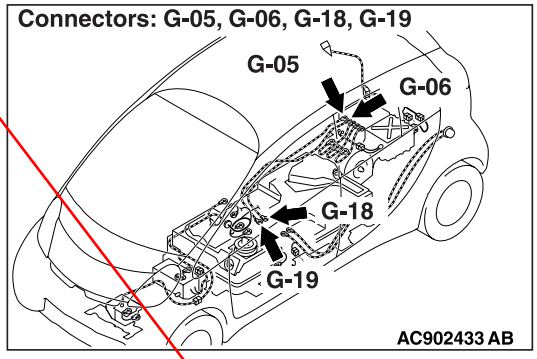

OPERATION

- The high-voltage circuit activation and shutdown are controlled by the EV-ECU. The EV-ECU also monitors the voltage of the smooth condenser in the MCU via the CAN communication.

DIAGNOSIS CODE SET CONDITIONS

- When the main contactors (+) and (–) are set to ON, if the voltage of the smooth condenser in the MCU is kept at 200 V or less, the diagnosis code No. P1A17 will be set.

PROBABLE CAUSES

- Damaged wiring harness or connector(s)
- Malfunction of the main battery assembly
- Malfunction of the MCU

DIAGNOSIS PROCEDURE

STEP 1. M.U.T.-III CAN bus diagnosis
Use the M.U.T.-III to diagnose the CAN bus lines.

Q: Is the check result normal?
YES : Go to Step 3.
NO : Repair the CAN bus line. (Refer to GROUP 54C – Troubleshooting .) Then go to Step 2.

STEP 2. Diagnosis code recheck after resetting CAN bus lines
Check again if the diagnosis code No. P1A17 is set to the EV-ECU.
(1) Erase the stored diagnosis code.
(2) Set the electric motor switch from the "LOCK" (OFF) position to the "ON" position.
(3) Set the electric motor switch to the "START" position, and start the electric motor unit.
(4) Check if the diagnosis code is set.

Q: Is the diagnosis code set?
YES : Go to Step 3.
NO : This diagnosis is complete.

STEP 3. Use M.U.T.-III to confirm a diagnosis code of other systems.
Check if the diagnosis code No. P1A1B is set to the MCU.

Q: Is the diagnosis code set?
YES : Carry out troubleshooting for the diagnosis code P1A1B. (Refer to .) Then go to Step 4.
NO : Go to Step 4.

STEP 4. Connector check: G-18, G-19 main battery connector, G-05, G-06 MCU connector

⚠ ***DANGER***
When servicing the high voltage system parts, always shut off the high voltage by removing the service plug (refer to).

⚠ ***DANGER***
Be sure to wear the specified protective equipment when removing the service plug.

Q: Is the check result normal?
YES : Go to Step 5.
NO : Replace the wiring harness.

STEP 5. Check the wiring harness between G-05, G-06 MCU connector terminal and G-18, G-19 main battery connector terminal.

⚠ ***DANGER***
When servicing the high voltage system parts, always shut off the high voltage by removing the service plug (refer to).

⚠ ***DANGER***
Be sure to wear the specified protective equipment when removing the service plug.
Check the high-voltage line for open circuit.

Q: Is the check result normal?
YES : Go to Step 6.
NO : Replace the wiring harness.

STEP 6. Diagnosis code recheck
Check again if the diagnosis code is set to the EV-ECU.
(1) Erase the stored diagnosis code.
(2) Set the electric motor switch from the "LOCK" (OFF) position to the "ON" position.
(3) Set the electric motor switch to the "START" position, and start the electric motor unit.
(4) Check if the diagnosis code is set.

Q: Is the diagnosis code set?

YES : Replace the main battery assembly. (Refer to .) Then go to Step 7.
NO : Intermittent malfunction (Refer to GROUP 00 – How to Use Troubleshooting/ Inspection Service Points - How to Cope with Intermittent Malfunction .)

STEP 7. Diagnosis code recheck
Check again if the diagnosis code is set to the EV-ECU.
(1) Erase the stored diagnosis code.
(2) Set the electric motor switch from the "LOCK" (OFF) position to the "ON" position.
(3) Set the electric motor switch to the "START" position, and start the electric motor unit.
(4) Check if the diagnosis code is set.

Q: Is the diagnosis code set?
YES : Return to Step 1.
NO : The diagnosis is complete.

Replace with attached sheets 21 (7/10—10/10)

<New>

12 MODEL

Attached sheet 21 (4/10)

<Old>

Code No. P1A17: High-voltage system error (3)

⚠ CAUTION

If there is any problem in the CAN bus lines, an incorrect diagnosis code may be set. Prior to this diagnosis, always diagnose the CAN bus lines.

REGULAR CHARGING CONTROL SYSTEM CIRCUIT

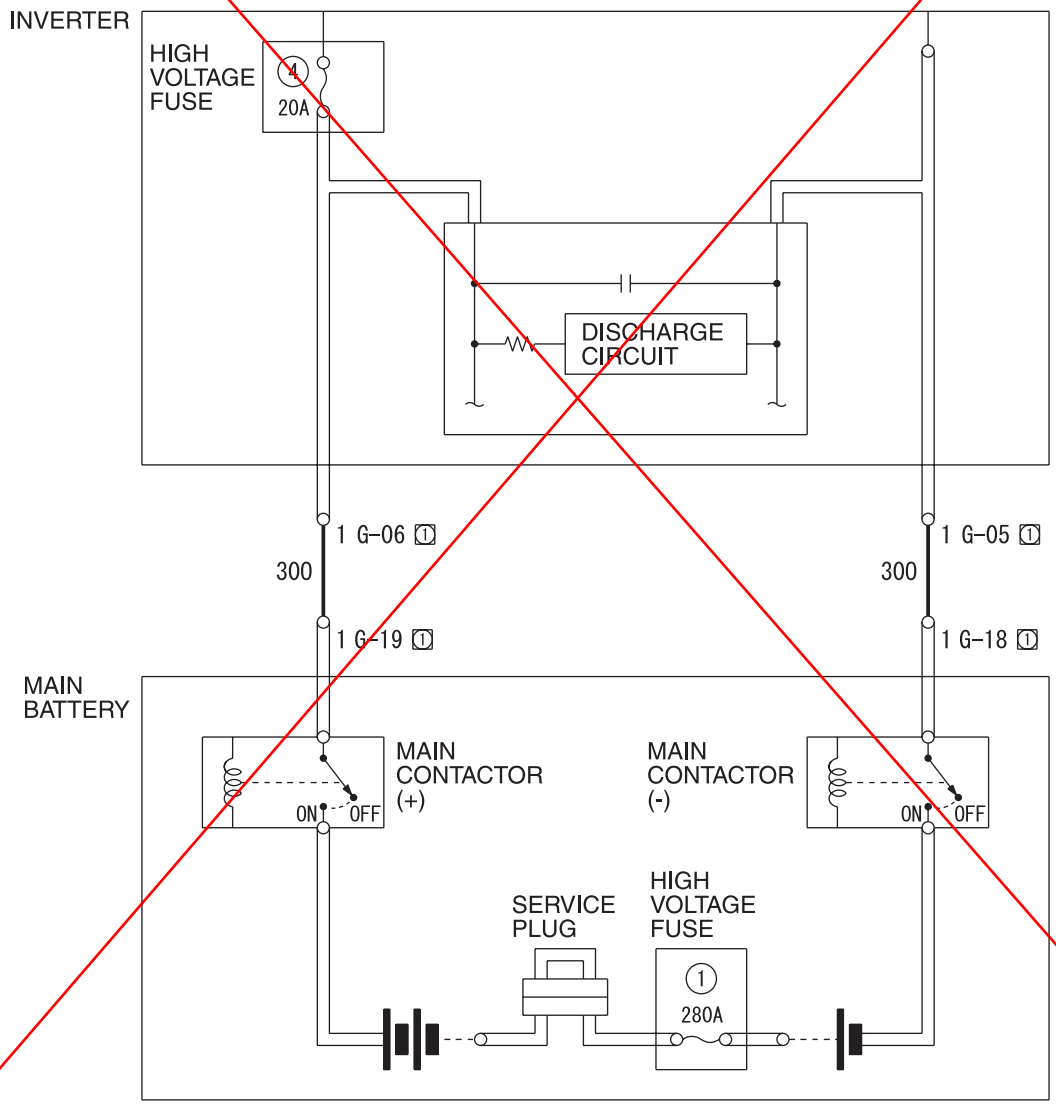

Wire colour code
B : Black LG : Light green G : Green L : Blue W : White Y : Yellow SB : Sky blue
BR : Brown O : Orange GR : Grey R : Red P : Pink V : Violet PU : Purple SI : Silver

ACA03511

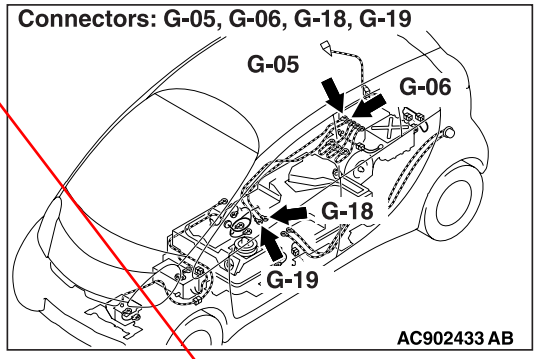

OPERATION

- The high-voltage circuit activation and shutdown are controlled by the EV-ECU. The EV-ECU also monitors the voltage of the smooth condenser in the EMCU via the CAN communication.

DIAGNOSIS CODE SET CONDITIONS

- When the main contactors (+) and (–) are set to ON, if the voltage of the smooth condenser in the EMCU is kept at 200 V or less, the diagnosis code No. P1A17 will be set.

PROBABLE CAUSES

- Damaged wiring harness or connector(s)
- Malfunction of the main battery assembly
- Malfunction of the EMCU

DIAGNOSIS PROCEDURE

STEP 1. M.U.T.-III CAN bus diagnosis
Use the M.U.T.-III to diagnose the CAN bus lines.

Q: Is the check result normal?
YES : Go to Step 3.
NO : Repair the CAN bus line. (Refer to GROUP 54C – Troubleshooting .) Then go to Step 2.

STEP 2. Diagnosis code recheck after resetting CAN bus lines
Check again if the diagnosis code No. P1A17 is set to the EV-ECU.
(1) Erase the stored diagnosis code.
(2) Set the electric motor switch from the "LOCK" (OFF) position to the "ON" position.
(3) Set the electric motor switch to the "START" position, and start the electric motor unit.
(4) Check if the diagnosis code is set.

Q: Is the diagnosis code set?
YES : Go to Step 3.
NO : This diagnosis is complete.

STEP 3. Use M.U.T.-III to confirm a diagnosis code of other systems.
Check if the diagnosis code No. P1A1B is set to the EMCU.

Q: Is the diagnosis code set?
YES : Carry out troubleshooting for the diagnosis code P1A1B. (Refer to .) Then go to Step 4.
NO : Go to Step 4.

STEP 4. Connector check: G-18, G-19 main battery connector, G-05, G-06 inverter connector

⚠ ***DANGER***
When servicing the high voltage system parts, always shut off the high voltage by removing the service plug (refer to).

⚠ ***DANGER***
Be sure to wear the specified protective equipment when removing the service plug.

Q: Is the check result normal?
YES : Go to Step 5.
NO : Replace the wiring harness.

STEP 5. Check the wiring harness between G-05, G-06 inverter connector terminal and G-18, G-19 main battery connector terminal.

⚠ ***DANGER***
When servicing the high voltage system parts, always shut off the high voltage by removing the service plug (refer to).

⚠ ***DANGER***
Be sure to wear the specified protective equipment when removing the service plug.
Check the high-voltage line for open circuit.

Q: Is the check result normal?
YES : Go to Step 6.
NO : Replace the wiring harness.

STEP 6. Diagnosis code recheck
Check again if the diagnosis code is set to the EV-ECU.
(1) Erase the stored diagnosis code.
(2) Set the electric motor switch from the "LOCK" (OFF) position to the "ON" position.
(3) Set the electric motor switch to the "START" position, and start the electric motor unit.
(4) Check if the diagnosis code is set.

Q: Is the diagnosis code set?

YES : Replace the main battery assembly. (Refer to .) Then go to Step 7.
NO : Intermittent malfunction (Refer to GROUP 00 – How to Use Troubleshooting/ Inspection Service Points - How to Cope with Intermittent Malfunction .)

STEP 7. Diagnosis code recheck
Check again if the diagnosis code is set to the EV-ECU.
(1) Erase the stored diagnosis code.
(2) Set the electric motor switch from the "LOCK" (OFF) position to the "ON" position.
(3) Set the electric motor switch to the "START" position, and start the electric motor unit.
(4) Check if the diagnosis code is set.

Q: Is the diagnosis code set?
YES : Return to Step 1.
NO : The diagnosis is complete.

To Attached sheet 21 (1/10－6/10)

Attached sheet 21 (7/10)

Code No. P1A17: High-voltage system error (3)

REGULAR CHARGING CONTROL SYSTEM CIRCUIT

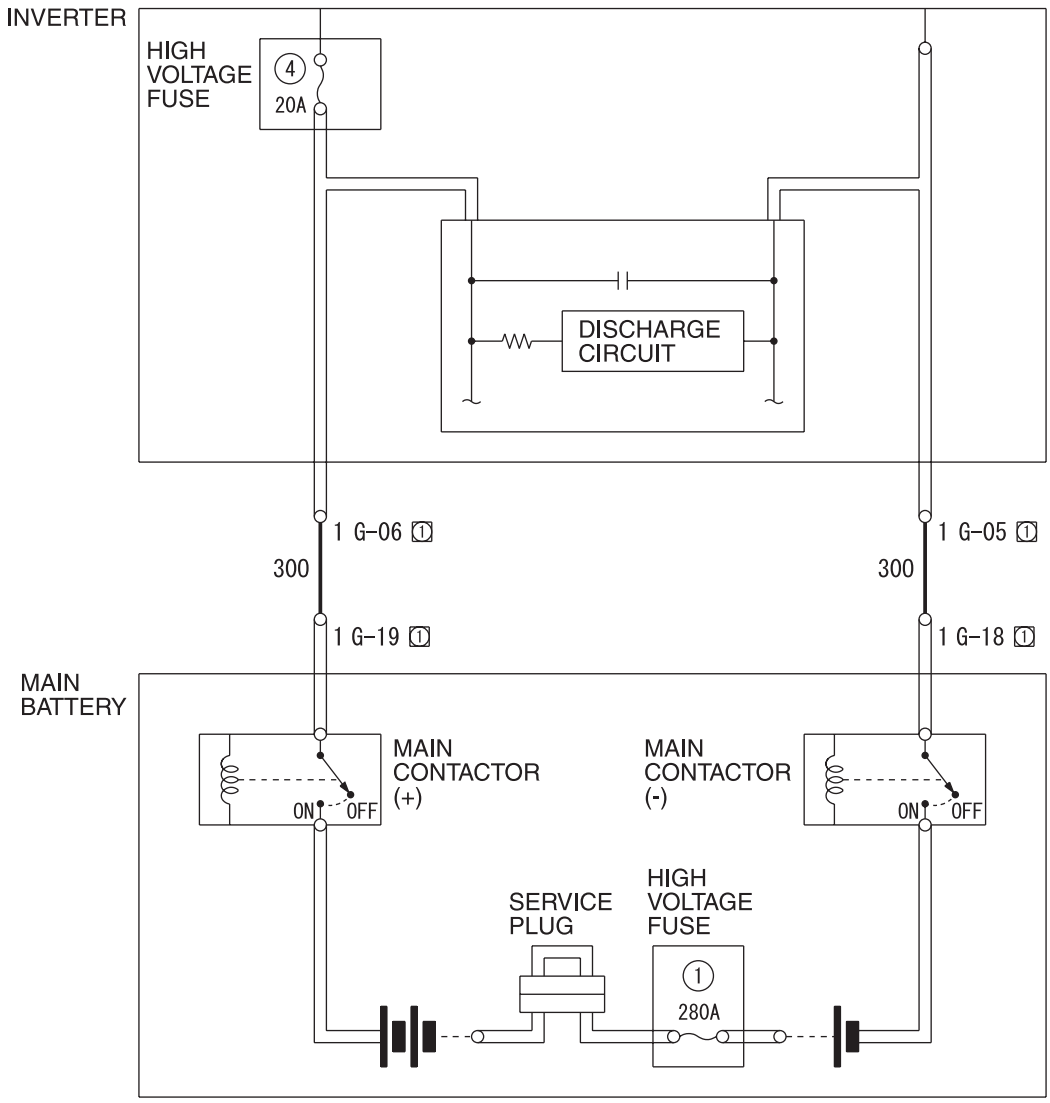

Wire colour code
B : Black LG : Light green G : Green L : Blue W : White Y : Yellow SB : Sky blue
BR : Brown O : Orange GR : Grey R : Red P : Pink V : Violet PU : Purple SI : Silver

ACA03511

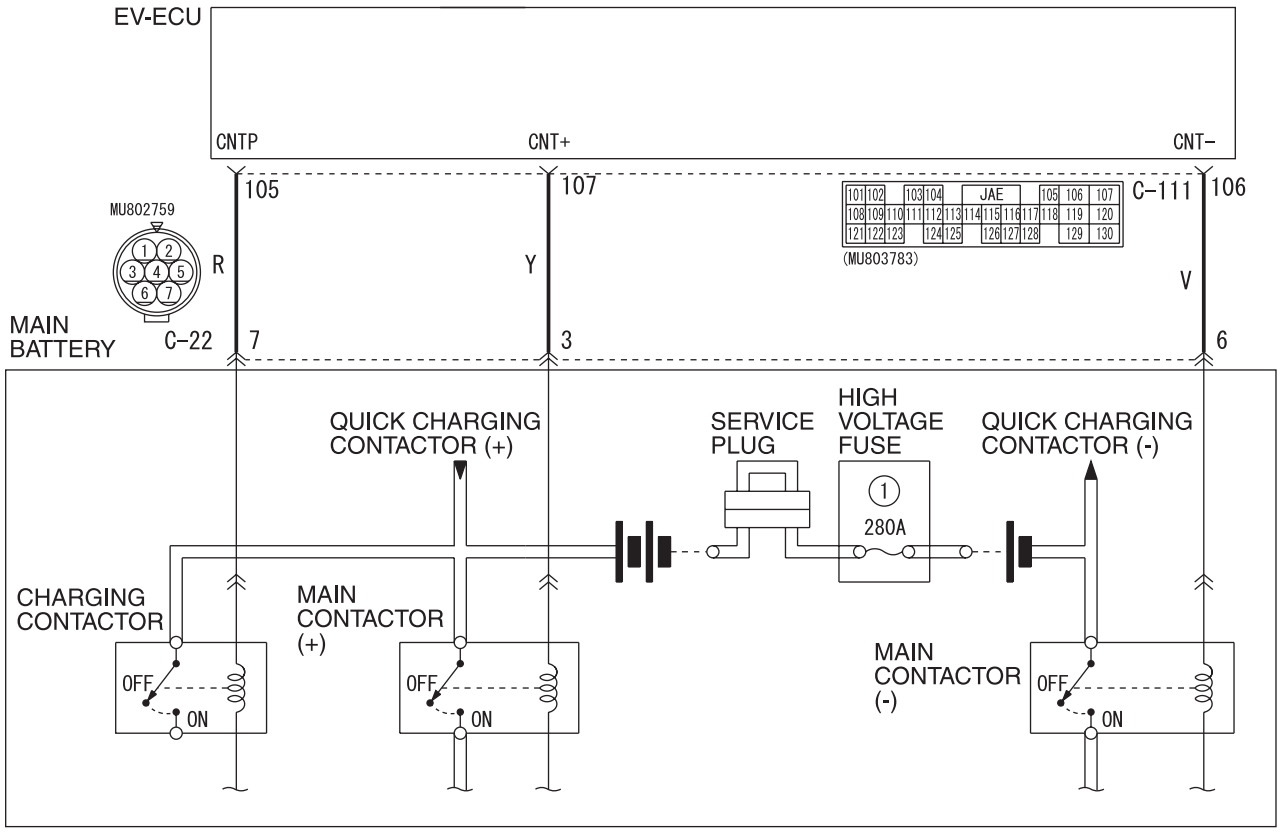

Wire colour code
B : Black LG : Light green G : Green L : Blue W : White Y : Yellow SB : Sky blue
BR : Brown O : Orange GR : Grey R : Red P : Pink V : Violet PU : Purple SI : Silver

ACA03485

Connector: C-22

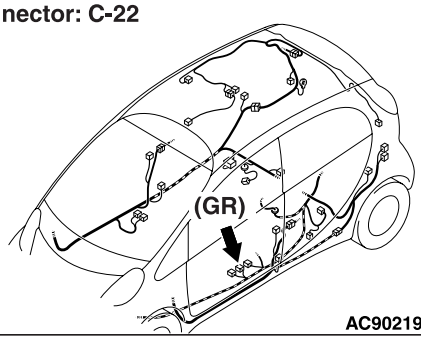

AC902191AO

Connector: C-111
Rear floor lower part

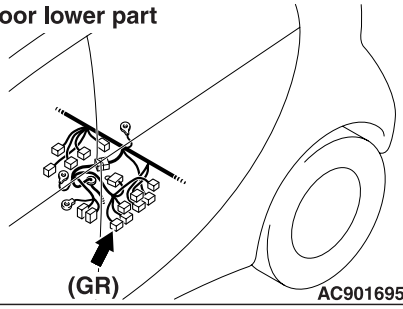

AC901695AM

Connectors: G-05, G-06, G-18, G-19

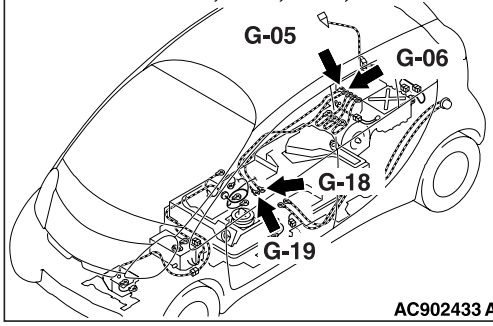

AC902433AB

⚠ ***DANGER***

- ***When servicing the high voltage system parts, always shut off the high voltage by removing the service plug (refer to).***
- ***When servicing the high voltage system parts, always wear the protective equipment or armour to measure the high voltage (refer to).***

⚠ **CAUTION**

If there is any problem in the CAN bus lines, an incorrect diagnosis code may be set. Prior to this diagnosis, always diagnose the CAN bus lines (Refer to GROUP 54C – CAN Bus Diagnostics Table).

OPERATION

- The high-voltage circuit activation and shutdown are controlled by the EV-ECU. The EV-ECU also monitors the voltage of the smooth condenser in the EMCU via the CAN communication.

DIAGNOSIS CODE SET CONDITIONS

- When the main contactors (+) and (–) are set to ON, if the voltage of the smooth condenser in the EMCU is kept at 200 V or less, the diagnosis code No. P1A17 will be set.

PROBABLE CAUSES

- Damaged wiring harness or connector(s)
- Malfunction of the main battery assembly
- Malfunction of the EMCU

DIAGNOSIS PROCEDURE

STEP 1. M.U.T.-III CAN bus diagnosis

Use the M.U.T.-III to diagnose the CAN bus lines.

Q: Is the check result normal?

YES : Go to Step 3.

NO : Repair the CAN bus line (Refer to GROUP 54C – Troubleshooting). Then go to Step 2.

STEP 2. Diagnosis code recheck after resetting CAN bus lines

Check again if the diagnosis code No. P1A17 is set to the EV-ECU.

(1) Erase the stored diagnosis code.

(2) Set the electric motor switch from the "LOCK" (OFF) position to the "ON", and then to the "START" position temporarily.

(3) Check if the diagnosis code is set.

Q: Is the diagnosis code set?

YES : Go to Step 3.

NO : This diagnosis is complete.

STEP 3. Use M.U.T.-III diagnosis code of other.

Check if the diagnosis code No. P1A15 is set to the EV-ECU.

Q: Is the diagnosis code set?

YES : Carry out troubleshooting for the diagnosis code.

NO : Go to Step 4.

STEP 4. Connector check: G-18, G-19 main battery connector, G-05, G-06 inverter connector

⚠ ***DANGER***

Carry out the check on the high-voltage circuit while reading carefully the precautions on handling a high-voltage vehicle.

⚠ ***DANGER***

Be sure to wear the specified protective equipment when removing the service plug.

- Check whether terminals are engaged correctly (deformation or discolouration).
- Check whether the terminals are tightened to the specified torque (Refer to and).
- Check whether foreign materials are pinched.

Q: Is the check result normal?

Yes: Go to Step 5.

No: Reconnect the terminals or replace the main battery cable.

STEP 5. Check the wiring harness between G-05, G-06 inverter connector terminal and G-18, G-19 main battery connector terminal.

⚠ ***DANGER***

Carry out the check on the high-voltage circuit while reading carefully the precautions on handling a high-voltage vehicle.

⚠ ***DANGER***

Be sure to wear the specified protective equipment when removing the service plug.

Check the high-voltage line for damage.

Q: Is the check result normal?

YES : Go to Step 6.

NO : Replace the main battery cable.

STEP 6. Connector check: C-22 main battery connector, C-111 EV-ECU connector

Q: Is the check result normal?

YES : Go to Step 7.

NO : Repair the damaged connector

STEP 7. Check the wiring harness between C-111 EV-ECU connector terminal No. 105, 106, 107 and C-22 main battery connector terminal No. 3, 6, 7.
Check the signal lines, earth line for open.

Q: Is the check result normal?
YES : Go to Step 8.
NO : Repair the wiring harness.

STEP 8. Check on main contactor (+), (-), charging contactor coil resistance of contactor.

Q: Is the check result normal?
YES : Go to Step 9.
NO : Replace the main battery assembly (Refer to).

STEP 9. Diagnosis code recheck
Check again if the diagnosis code is set to the EV-ECU.
(1) Erase the stored diagnosis code.
(2) Set the electric motor switch from the "LOCK" (OFF) position to the "ON", and then to the "START" position temporarily.
(3) Check if the diagnosis code is set.

Q: Is the diagnosis code set?
YES : Replace the main battery assembly (Refer to). Then go to Step 10.
NO : Intermittent malfunction (Refer to GROUP 00 – How to Use Troubleshooting/ Inspection Service Points - How to Cope with Intermittent Malfunction).

STEP 10. Diagnosis code recheck
Check again if the diagnosis code is set to the EV-ECU.
(1) Erase the stored diagnosis code.
(2) Set the electric motor switch from the "LOCK" (OFF) position to the "ON", and then to the "START" position temporarily.
(3) Check if the diagnosis code is set.

Q: Is the diagnosis code set?
YES : Return to Step 1.
NO : The diagnosis is complete.

(4) Run the vehicle.
(5) Check if the diagnosis code is set.

Q: Is the diagnosis code set?
YES : Go to Step 3.
NO : This diagnosis is complete.

STEP 3. Use M.U.T.-III to confirm a diagnosis code of other systems.
Check if the diagnosis code No. P1A25 is set to the MCU.

Q: Is the diagnosis code set?
YES : Carry out troubleshooting for the diagnosis code No. P1A25. (Refer to .) Then go to Step 4.
NO : Go to Step 4.

STEP 4. Diagnosis code recheck
Check again if the diagnosis code is set to the EV-ECU.
(1) Erase the stored diagnosis code.
(2) Set the electric motor switch from the LOCK (OFF) position to the ON position.
(3) Set the electric motor switch to the LOCK (OFF) position, and start the electric motor unit.
(4) Run the vehicle.
(5) Check if the diagnosis code is set.

Q: Is the diagnosis code set?
YES : Return to Step 1.
NO : The diagnosis is complete.

<Old>
11 MODEL

Code No. P1A26: Condenser discharge command OFF waiting time-out (MCU)

⚠ CAUTION
If there is any problem in the CAN bus lines, an incorrect diagnosis code may be set. Prior to this diagnosis, always diagnose the CAN bus lines.

OPERATION
- MCU communicates with the EV-ECU via CAN.

DIAGNOSIS CODE SET CONDITIONS
- When the diagnosis code No. P1A26 is set to the MCU, the diagnosis code No. P1A26 will be set.

PROBABLE CAUSES
- Malfunction of the MCU system

DIAGNOSIS PROCEDURE

STEP 1. M.U.T.-III CAN bus diagnosis
Use the M.U.T.-III to diagnose the CAN bus lines.

Q: Is the check result normal?
YES : Go to Step 3.
NO : Repair the CAN bus line. (Refer to GROUP 54C – Troubleshooting .) Then go to Step 2.

STEP 2. Diagnosis code recheck after resetting CAN bus lines
Check again if the diagnosis code No. P1A26 is set to the EV-ECU.
(1) Erase the stored diagnosis code.
(2) Set the electric motor switch from the LOCK (OFF) position to the ON position.
(3) Set the electric motor switch to the LOCK (OFF) position, and start the electric motor unit.
(4) Run the vehicle.
(5) Check if the diagnosis code is set.

Q: Is the diagnosis code set?
YES : Go to Step 3.
NO : This diagnosis is complete.

STEP 3. Use M.U.T.-III to confirm a diagnosis code of other systems.
Check if the diagnosis code No. P1A26 is set to the MCU.

Q: Is the diagnosis code set?
YES : Carry out troubleshooting for the diagnosis code No. P1A26. (Refer to .) Then go to Step 4.
NO : Go to Step 4.

STEP 4. Diagnosis code recheck
Check again if the diagnosis code is set to the EV-ECU.
(1) Erase the stored diagnosis code.
(2) Set the electric motor switch from the LOCK (OFF) position to the ON position.
(3) Set the electric motor switch to the LOCK (OFF) position, and start the electric motor unit.
(4) Run the vehicle.
(5) Check if the diagnosis code is set.

Q: Is the diagnosis code set?
YES : Return to Step 1.
NO : The diagnosis is complete.

(4) Run the vehicle.
(5) Check if the diagnosis code is set.

Q: Is the diagnosis code set?
YES : Go to Step 3.
NO : This diagnosis is complete.

STEP 3. Use M.U.T.-III to confirm a diagnosis code of other systems.
Check if the diagnosis code No. P1A25 is set to the EMCU.

Q: Is the diagnosis code set?
YES : Carry out troubleshooting for the diagnosis code No. P1A25. (Refer to .) Then go to Step 4.
NO : Go to Step 4.

STEP 4. Diagnosis code recheck
Check again if the diagnosis code is set to the EV-ECU.
(1) Erase the stored diagnosis code.
(2) Set the electric motor switch from the LOCK (OFF) position to the ON position.
(3) Set the electric motor switch to the LOCK (OFF) position, and start the electric motor unit.
(4) Run the vehicle.
(5) Check if the diagnosis code is set.

Q: Is the diagnosis code set?
YES : Return to Step 1.
NO : The diagnosis is complete.

<Old>
12 MODEL

Code No. P1A26: Condenser discharge command OFF waiting time-out (EMCU)

⚠ CAUTION
If there is any problem in the CAN bus lines, an incorrect diagnosis code may be set. Prior to this diagnosis, always diagnose the CAN bus lines.

OPERATION
- EMCU communicates with the EV-ECU via CAN.

DIAGNOSIS CODE SET CONDITIONS
- When the diagnosis code No. P1A26 is set to the EMCU, the diagnosis code No. P1A26 will be set.

PROBABLE CAUSES
- Malfunction of the EMCU system

DIAGNOSIS PROCEDURE

STEP 1. M.U.T.-III CAN bus diagnosis
Use the M.U.T.-III to diagnose the CAN bus lines.

Q: Is the check result normal?
YES : Go to Step 3.
NO : Repair the CAN bus line. (Refer to GROUP 54C – Troubleshooting .) Then go to Step 2.

STEP 2. Diagnosis code recheck after resetting CAN bus lines
Check again if the diagnosis code No. P1A26 is set to the EV-ECU.
(1) Erase the stored diagnosis code.
(2) Set the electric motor switch from the LOCK (OFF) position to the ON position.
(3) Set the electric motor switch to the LOCK (OFF) position, and start the electric motor unit.
(4) Run the vehicle.
(5) Check if the diagnosis code is set.

Q: Is the diagnosis code set?
YES : Go to Step 3.
NO : This diagnosis is complete.

STEP 3. Use M.U.T.-III to confirm a diagnosis code of other systems.
Check if the diagnosis code No. P1A26 is set to the EMCU.

Q: Is the diagnosis code set?
YES : Carry out troubleshooting for the diagnosis code No. P1A26. (Refer to .) Then go to Step 4.
NO : Go to Step 4.

STEP 4. Diagnosis code recheck
Check again if the diagnosis code is set to the EV-ECU.
(1) Erase the stored diagnosis code.
(2) Set the electric motor switch from the LOCK (OFF) position to the ON position.
(3) Set the electric motor switch to the LOCK (OFF) position, and start the electric motor unit.
(4) Run the vehicle.
(5) Check if the diagnosis code is set.

Q: Is the diagnosis code set?
YES : Return to Step 1.
NO : The diagnosis is complete.

To Attached sheet 22 (1/3－2/3)

Code No. P1A26: Condenser discharge command OFF waiting time-out (EMCU)

⚠ CAUTION
If there is any problem in the CAN bus lines, an incorrect diagnosis code may be set. Prior to this diagnosis, always diagnose the CAN bus lines (Refer to GROUP 54C – CAN Bus Diagnostics Table).

OPERATION
- EMCU communicates with the EV-ECU via CAN.

DIAGNOSIS CODE SET CONDITIONS
- When the diagnosis code No. P1A26 is set to the EMCU when the high-voltage circuit is shut down, the diagnosis code No. P1A26 will be set.

NOTE: The diagnosis code is stored as a historic trouble. Therefore, follow the troubleshooting steps for the historic trouble.

PROBABLE CAUSES
- Damaged wiring harness or connector(s)
- Malfunction of the EV water PTC heater
- Malfunction of the A/C compressor
- Malfunction of the onboard charger/DC-DC converter
- Malfunction of the main battery assembly
- Malfunction of the EMCU

DIAGNOSIS PROCEDURE

STEP 1. M.U.T.-III CAN bus diagnosis
Use the M.U.T.-III to diagnose the CAN bus lines.

Q: Is the check result normal?
YES : Go to Step 3.
NO : Repair the CAN bus line (Refer to GROUP 54C – Troubleshooting). Then go to Step 2.

STEP 2. Diagnosis code recheck after resetting CAN bus lines
Check again if the diagnosis code No. P1A26 is set to the EV-ECU.
(1) Erase the stored diagnosis code.
(2) Set the electric motor switch from the "LOCK" (OFF) position to the "ON", and then to the "START" position temporarily.
(3) After the electric motor switch from the "LOCK" (OFF) position, reset the electric motor switch from the "LOCK" (OFF) position to the "ON" position.
(4) Run the vehicle.
(5) Check if the diagnosis code is set.

Q: Is the diagnosis code set?
YES : Go to Step 3.
NO : This diagnosis is complete.

STEP 3. Use M.U.T.-III diagnosis code of other.
Check if the diagnosis code No. P0AA1, P0AA2 or P0AE2 is set to the EV-ECU.

Q: Is the diagnosis code set?
YES : Carry out troubleshooting for the diagnosis code.
NO : Go to Step 4.

STEP 4. Use M.U.T.-III to confirm a diagnosis code of other systems.
Check if the diagnosis code No. P1A26 is set to the EMCU.

Q: Is the diagnosis code set?
YES : Carry out troubleshooting for the diagnosis code No. P1A26 (Refer to). Then go to Step 5.
NO : Go to Step 5.

STEP 5. Diagnosis code recheck
Check again if the diagnosis code is set to the EV-ECU.
(1) Erase the stored diagnosis code.
(2) Set the electric motor switch from the "LOCK" (OFF) position to the "ON", and then to the "START" position temporarily.
(3) After the electric motor switch from the "LOCK" (OFF) position, reset the electric motor switch from the "LOCK" (OFF) position to the "ON" position.
(4) Run the vehicle.
(5) Check if the diagnosis code is set.

Q: Is the diagnosis code set?
YES : Return to Step 1.
NO : The diagnosis is complete.

(3) Check if the diagnosis code is set.

Q: Is the diagnosis code set?

YES : Return to Step 1.
NO : The diagnosis is complete.

<Old>
11 MODEL

Code No. P1AF2: MCU condenser discharge command F/B

⚠ CAUTION
If there is any problem in the CAN bus lines, an incorrect diagnosis code may be set. Prior to this diagnosis, always diagnose the CAN bus lines.

OPERATION
- MCU communicates with the EV-ECU via CAN.

DIAGNOSIS CODE SET CONDITIONS
- If the conditions that the EV-ECU discharge command is ON and MCU discharge command feedback is OFF are met for 2 seconds or longer, the diagnosis code No. P1AF2 will be set.

PROBABLE CAUSES
- Malfunction of the MCU system

DIAGNOSIS PROCEDURE

STEP 1. M.U.T.-III CAN bus diagnosis
Use the M.U.T.-III to diagnose the CAN bus lines.

Q: Is the check result normal?
YES : Go to Step 3.
NO : Repair the CAN bus line. (Refer to GROUP 54C – Troubleshooting .) Then go to Step 2.

STEP 2. Diagnosis code recheck after resetting CAN bus lines
Check again if the diagnosis code No. P1AF2 is set to the EV-ECU.
(1) Erase the stored diagnosis code.
(2) Set the electric motor switch from the LOCK (OFF) position to the ON position.
(3) Check if the diagnosis code is set.

Q: Is the diagnosis code set?
YES : Go to Step 3.
NO : This diagnosis is complete.

STEP 3. Use M.U.T.-III to confirm a diagnosis code of other systems.
Check if the diagnosis code is set to the MCU.

Q: Is the diagnosis code set?
YES : Carry out troubleshooting for the MCU. (Refer to .) Then go to Step 4.
NO : Go to Step 4.

STEP 4. Diagnosis code recheck
Check again if the diagnosis code is set to the EV-ECU.
(1) Erase the stored diagnosis code.
(2) Set the electric motor switch from the LOCK (OFF) position to the ON position.
(3) Check if the diagnosis code is set.

Q: Is the diagnosis code set?
YES : Return to Step 1.
NO : The diagnosis is complete.

Code No. P1AF3: BMU READY time-out

⚠ CAUTION
If there is any problem in the CAN bus lines, an incorrect diagnosis code may be set. Prior to this diagnosis, always diagnose the CAN bus lines.

OPERATION
- BMU communicates with EV-ECU via CAN.

DIAGNOSIS CODE SET CONDITIONS
- If the BMU_READY signal ON from the BMU cannot be received for the specific time or longer, the diagnosis code No. P1AF3 will be set.

PROBABLE CAUSES
- Malfunction of the BMU system

DIAGNOSIS PROCEDURE

STEP 1. M.U.T.-III CAN bus diagnosis
Use the M.U.T.-III to diagnose the CAN bus lines.

Q: Is the check result normal?

(3) Check if the diagnosis code is set.

Q: Is the diagnosis code set?

YES : Return to Step 1.
NO : The diagnosis is complete.

<Old>

12 MODEL

Code No. P1AF2: EMCU condenser discharge command F/B

⚠ CAUTION
If there is any problem in the CAN bus lines, an incorrect diagnosis code may be set. Prior to this diagnosis, always diagnose the CAN bus lines.

OPERATION

- EMCU communicates with the EV-ECU via CAN.

DIAGNOSIS CODE SET CONDITIONS

- If the conditions that the EV-ECU discharge command is ON and EMCU discharge command feedback is OFF are met for 2 seconds or longer, the diagnosis code No. P1AF2 will be set.

PROBABLE CAUSES

- Malfunction of the EMCU system

DIAGNOSIS PROCEDURE

STEP 1. M.U.T.-III CAN bus diagnosis
Use the M.U.T.-III to diagnose the CAN bus lines.

Q: Is the check result normal?
YES : Go to Step 3.
NO : Repair the CAN bus line. (Refer to GROUP 54C – Troubleshooting .) Then go to Step 2.

STEP 2. Diagnosis code recheck after resetting CAN bus lines
Check again if the diagnosis code No. P1AF2 is set to the EV-ECU.
(1) Erase the stored diagnosis code.
(2) Set the electric motor switch from the LOCK (OFF) position to the ON position.
(3) Check if the diagnosis code is set.

Q: Is the diagnosis code set?
YES : Go to Step 3.
NO : This diagnosis is complete.

STEP 3. Use M.U.T.-III to confirm a diagnosis code of other systems.
Check if the diagnosis code is set to the EMCU.

Q: Is the diagnosis code set?
YES : Carry out troubleshooting for the EMCU. (Refer to .) Then go to Step 4.
NO : Go to Step 4.

STEP 4. Diagnosis code recheck
Check again if the diagnosis code is set to the EV-ECU.
(1) Erase the stored diagnosis code.
(2) Set the electric motor switch from the LOCK (OFF) position to the ON position.
(3) Check if the diagnosis code is set.

Q: Is the diagnosis code set?
YES : Return to Step 1.
NO : The diagnosis is complete.

Code No. P1AF3: BMU READY time-out

⚠ CAUTION
If there is any problem in the CAN bus lines, an incorrect diagnosis code may be set. Prior to this diagnosis, always diagnose the CAN bus lines.

OPERATION

- BMU communicates with EV-ECU via CAN.

DIAGNOSIS CODE SET CONDITIONS

- If the BMU_READY signal ON from the BMU cannot be received for the specific time or longer, the diagnosis code No. P1AF3 will be set.

PROBABLE CAUSES

- Malfunction of the BMU system

DIAGNOSIS PROCEDURE

STEP 1. M.U.T.-III CAN bus diagnosis
Use the M.U.T.-III to diagnose the CAN bus lines.

Q: Is the check result normal?

To Attached sheet 23 (1/3－2/3)

Code No. P1AF2: EMCU condenser discharge command F/B

⚠ CAUTION
If there is any problem in the CAN bus lines, an incorrect diagnosis code may be set. Prior to this diagnosis, always diagnose the CAN bus lines (Refer to GROUP 54C – CAN Bus Diagnostics Table).

OPERATION
- EMCU communicates with the EV-ECU via CAN.

DIAGNOSIS CODE SET CONDITIONS
- If the conditions that the EV-ECU discharge command is ON and EMCU discharge command feedback is OFF are met for 2 seconds or longer when the high-voltage circuit is shut down, the diagnosis code No. P1AF2 will be set.

PROBABLE CAUSES
- Damaged wiring harness or connector(s)
- Malfunction of the EV water PTC heater
- Malfunction of the A/C compressor
- Malfunction of the onboard charger/DC-DC converter
- Malfunction of the main battery assembly
- Malfunction of the EMCU

DIAGNOSIS PROCEDURE

STEP 1. M.U.T.-III CAN bus diagnosis
Use the M.U.T.-III to diagnose the CAN bus lines.

Q: Is the check result normal?
YES : Go to Step 3.
NO : Repair the CAN bus line (Refer to GROUP 54C – Troubleshooting). Then go to Step 2.

STEP 2. Diagnosis code recheck after resetting CAN bus lines
Check again if the diagnosis code No. P1AF2 is set to the EV-ECU.
(1) Erase the stored diagnosis code.
(2) Set the electric motor switch from the "LOCK" (OFF) position to the "ON", and then to the "START" position temporarily.
(3) After the electric motor switch from the "LOCK" (OFF) position, reset the electric motor switch from the "LOCK" (OFF) position to the "ON" position.
(4) Check if the diagnosis code is set.

Q: Is the diagnosis code set?
YES : Go to Step 3.
NO : This diagnosis is complete.

STEP 3. Use M.U.T.-III diagnosis code of other.
Check if the diagnosis code No. P1A15 is set to the EV-ECU.

Q: Is the diagnosis code set?
YES : Carry out troubleshooting for the diagnosis code.
NO : Go to Step 4.

STEP 4. Use M.U.T.-III to confirm a diagnosis code of other systems.
Check if the diagnosis code is set to the EMCU.

Q: Is the diagnosis code set?
YES : Carry out troubleshooting for the EMCU (Refer to). Then go to Step 5.
NO : Go to Step 5.

STEP 5. Diagnosis code recheck
Check again if the diagnosis code is set to the EV-ECU.
(1) Erase the stored diagnosis code.
(2) Set the electric motor switch from the "LOCK" (OFF) position to the "ON", and then to the "START" position temporarily.
(3) After the electric motor switch from the "LOCK" (OFF) position, reset the electric motor switch from the "LOCK" (OFF) position to the "ON" position.
(4) Check if the diagnosis code is set.

Q: Is the diagnosis code set?
YES : Return to Step 1.
NO : The diagnosis is complete.

Code No. P1AF3: BMU READY time-out

⚠ CAUTION
If there is any problem in the CAN bus lines, an incorrect diagnosis code may be set. Prior to this diagnosis, always diagnose the CAN bus lines.

OPERATION
- BMU communicates with EV-ECU via CAN.

Replace with attached sheets
24 (5/11－11/11)

<New>

Attached sheet 24 (1/11)

<Old>

DTC P0AA1 Main contactor (+) (seizure)

HIGH VOLTAGE POWER SUPPLY CONTROL SYSTEM CIRCUIT

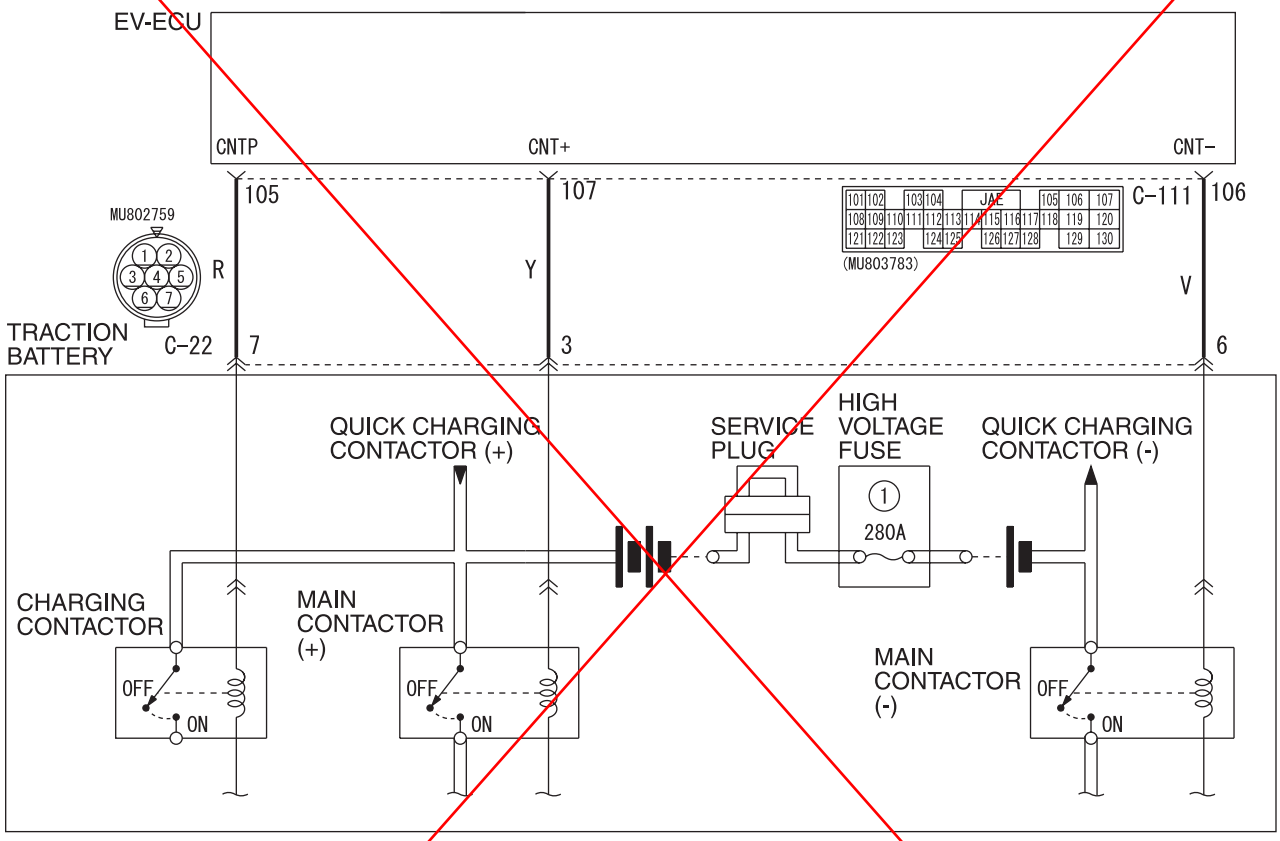

Wire colour code
B : Black LG : Light green G : Green L : Blue W : White Y : Yellow SB : Sky blue
BR : Brown O : Orange GR : Grey R : Red P : Pink V : Violet PU : Purple SI : Silver

ACA03485 AC

Connector: C-22

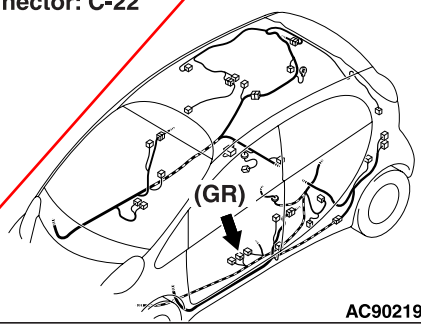

AC902191AO

Connector: C-111
Rear floor lower part

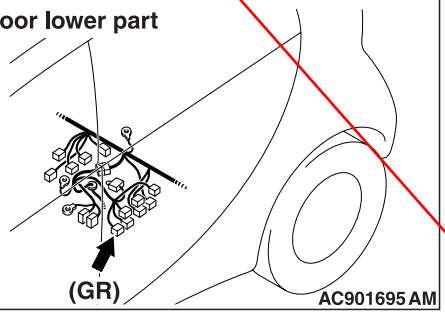

AC901695 AM

TSB Revision

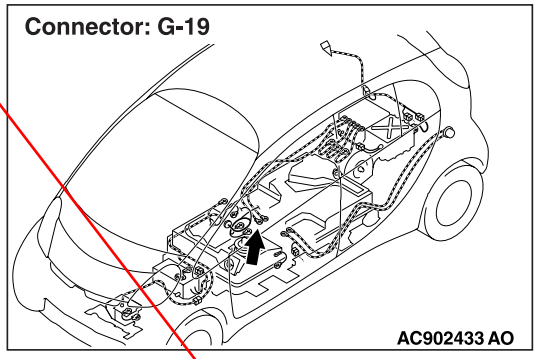

⚠ DANGER

- ***When servicing the high voltage system parts, always shut off the high voltage by removing the service plug (Refer to .).***
- ***When servicing the high voltage system parts, always wear the protective equipment or armor to measure the high voltage (Refer to .).***

⚠ CAUTION

If there is any problem in the CAN bus lines, an incorrect DTC may be set. Prior to this diagnosis, always diagnose the CAN bus lines (Refer to GROUP 54C – CAN Bus Diagnostics Table .).

OPERATION

- The smooth condenser in the EMCU is controlled by the EV-ECU, connects and shuts down the high-voltage circuit via the main contactor (+) and (–) in the traction battery.

DTC SET CONDITION

- If a seizure of the main contactor (+) is determined when the high-voltage circuit is shut down, the DTC P0AA1 will be set.

PROBABLE CAUSES

- Damaged wiring harness or connector(s)
- Seizure of the charging contactor
- Malfunction of the traction battery
- Malfunction of the EV-ECU

DIAGNOSIS

STEP 1. Using scan tool MB991958, diagnose the CAN bus lines.

Use the scan tool to diagnose the CAN bus lines.

Q: Is the check result normal?

YES : Go to Step 3.
NO : Repair the CAN bus line (Refer to GROUP 54C – CAN Bus Diagnostics Table .). Then go to Step 2.

STEP 2. DTC recheck after resetting CAN bus lines

Check again if the DTC P0AA1 is set to the EV-ECU.
(1) Erase the DTC.
(2) Set the electric motor switch from the "LOCK" (OFF) position to the "ON", and then to the "START" position temporarily.
(3) Reset the electric motor switch from the "LOCK" (OFF) position to the "ON" position.
(4) Check if the DTC is set.

Q: Is the DTC set?

YES : Go to Step 3.
NO : This diagnosis is complete.

TSB Revision

STEP 3. Connector check: C-22 traction battery connector, C-111 EV-ECU connector

Q: Is the check result normal?

YES : Go to Step 4.
NO : Repair the damaged connector.

STEP 4. Check the wiring harness between C-111 EV-ECU connector terminal No. 106, 107 and C-22 traction battery connector terminal No. 3, 6.

Check the signal lines for short to power supply.

Q: Is the check result normal?

YES : Go to Step 5.
NO : Repair the wiring harness.

STEP 5. Voltage measurement at G-19 high-voltage, service plug connector

⚠ ***DANGER***

When servicing the high voltage system parts, always wear the protective equipment or armor to measure the high voltage (Refer to .).

⚠ ***DANGER***

Be sure to wear the specified protective equipment when removing the service plug.

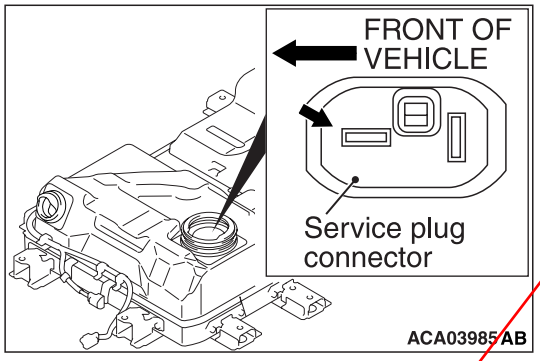

(1) Using a high voltage multimeter, measure the high voltage between the G-19 connection terminal and service plug connection forward terminal.

OK: 0 V

Q: Is the check result normal?

YES : Go to Step 6.
NO : Go to Step 7.

STEP 6. Check whether the DTC is reset.

Check again if the DTC is set to the EV-ECU.

(1) Erase the DTC.
(2) Set the electric motor switch from the "LOCK" (OFF) position to the "ON", and then to the "START" position temporarily.
(3) Reset the electric motor switch from the "LOCK" (OFF) position to the "ON" position.
(4) Check if the DTC is set.

Q: Is the DTC P0AA1 set?

YES : Replace the EV-ECU (Refer to .). Then go to Step 7.
NO : Intermittent malfunction (Refer to GROUP 00 – How to Use Troubleshooting/Inspection Service Points, How to Cope with Intermittent Malfunctions .).

STEP 7. Check whether the DTC is reset.

Check again if the DTC is set to the EV-ECU.

(1) Erase the DTC.
(2) Set the electric motor switch from the "LOCK" (OFF) position to the "ON", and then to the "START" position temporarily.
(3) Reset the electric motor switch from the "LOCK" (OFF) position to the "ON" position.
(4) Check if the DTC is set.

Q: Is the DTC P0AA1 set?

YES : Replace the traction battery (Refer to .). Then go to Step 8.
NO : The diagnosis is complete.

STEP 8. Check whether the DTC is reset.

Check again if the DTC is set to the EV-ECU.

(1) Erase the DTC.
(2) Set the electric motor switch from the "LOCK" (OFF) position to the "ON", and then to the "START" position temporarily.
(3) Reset the electric motor switch from the "LOCK" (OFF) position to the "ON" position.
(4) Check if the DTC is set.

Q: Is the DTC P0AA1 set?

YES : Return to Step 1.
NO : The diagnosis is complete.

To Attached sheet 24 (1/11－4/11)

Attached sheet 24 (5/11)

DTC P0AA1 Main contactor (+) (seizure)

HIGH VOLTAGE POWER SUPPLY CONTROL SYSTEM CIRCUIT

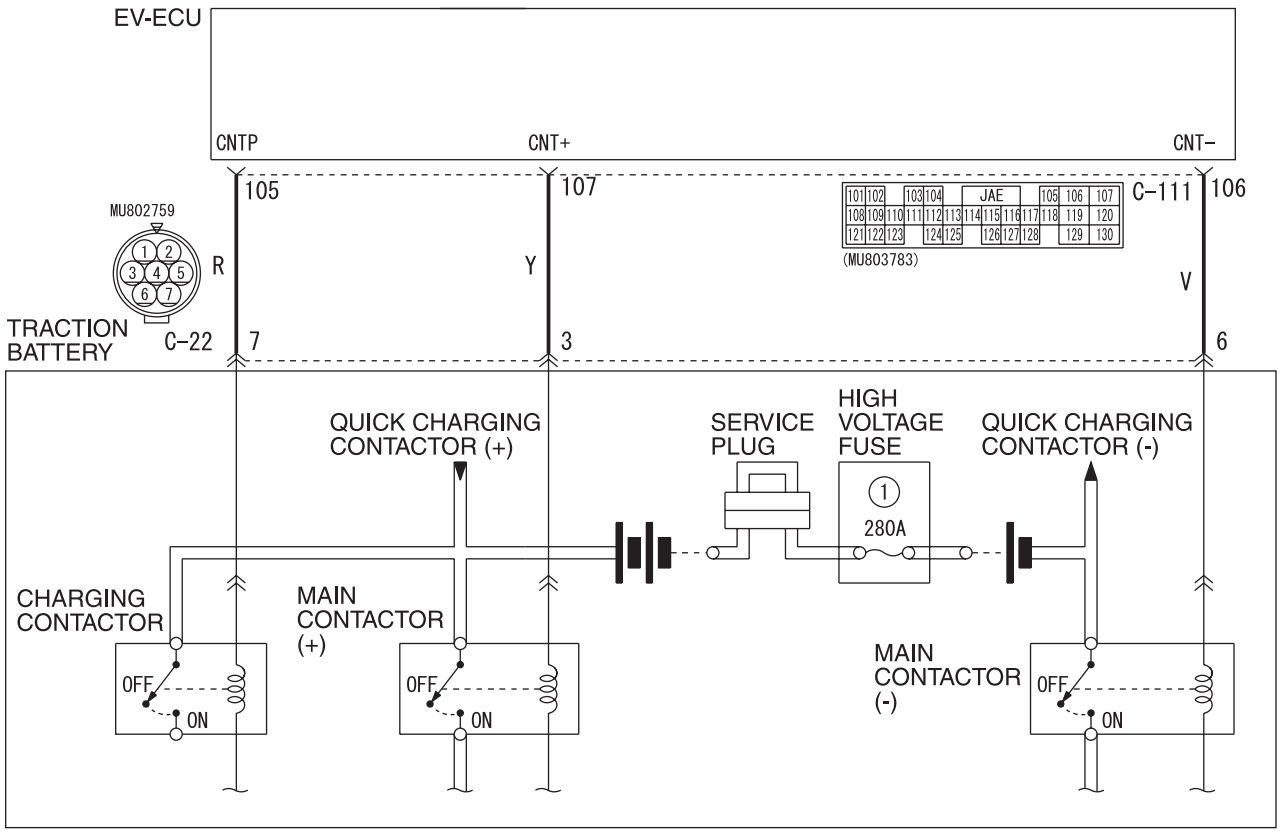

Wire colour code
B : Black LG : Light green G : Green L : Blue W : White Y : Yellow SB : Sky blue
BR : Brown O : Orange GR : Grey R : Red P : Pink V : Violet PU : Purple SI : Silver

ACA03485 AC

To Attached sheet 24
(1/11—4/11)

Attached sheet 24 (6/11)

A/C Control Circuit

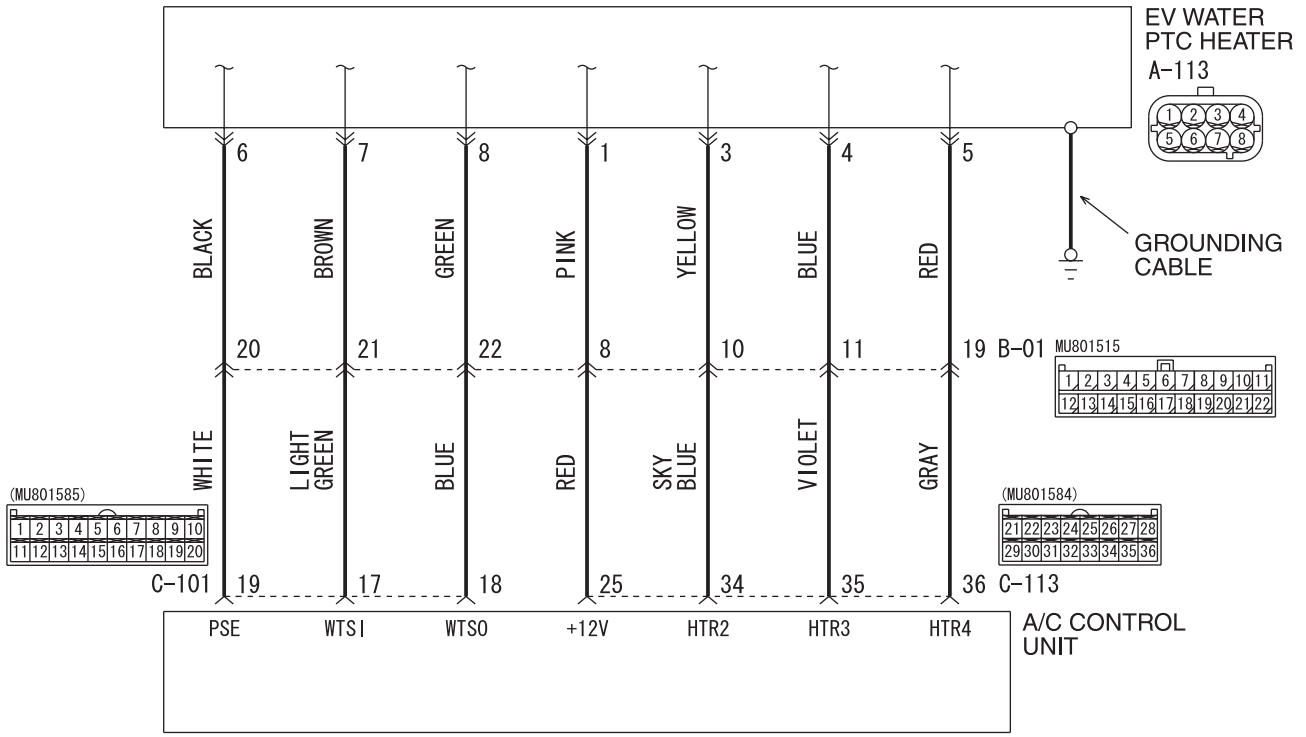

WDT55M008A

Connector: A-113

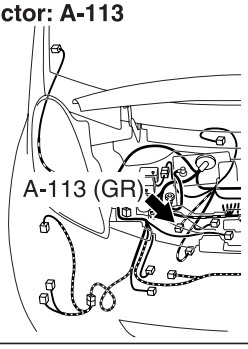

ACB01401AC

Connectors: C-111, C-113

Rear floor lower part

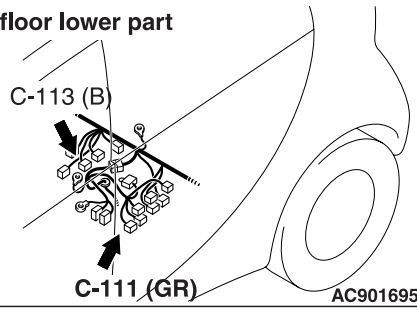

AC901695BG

Connector: C-22

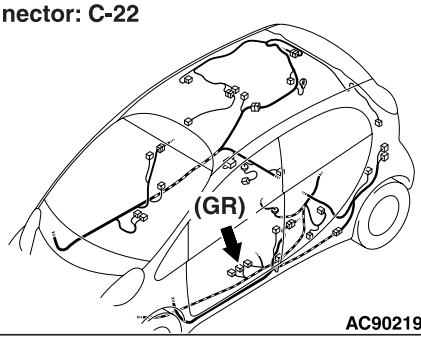

AC902191AO

Connectors: G-19, G-21

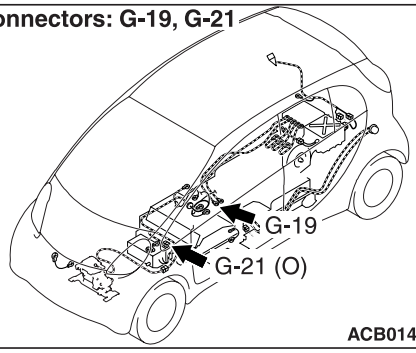

ACB01447AE

TSB Revision

To Attached sheet 24
(1/11－4/11)

Attached sheet 24 (7/11)

⚠ ***DANGER***

- ***When servicing the high voltage system parts, always shut off the high voltage by removing the service plug (Refer to).***
- ***When servicing the high voltage system parts, always wear the protective equipment or armor to measure the high voltage (Refer to).***

⚠ **CAUTION**

If there is any problem in the CAN bus lines, an incorrect DTC may be set. Prior to this diagnosis, always diagnose the CAN bus lines (Refer to GROUP 54C – CAN Bus Diagnostics Table).

OPERATION

- The main contactors (+) and (-) the charging contactor inside the traction battery, which are controlled by the EV-ECU, activate and deactivate the high-voltage circuit. The EV-ECU monitors the voltage in the smoothing condenser in the EMCU.

DTC SET CONDITION

- if a seizure of the main contactor (+) or charging contactor is determined when the high-voltage circuit is shut down, the DTC P0AA1 will be set.

NOTE: This diagnosis code is stored as a current trouble only. Therefore, follow the troubleshooting steps for the current trouble.

PROBABLE CAUSES

- Damaged wiring harness or connector(s)
- Malfunction of the traction battery assembly
- Malfunction of the EV-ECU
- Malfunction of the EV water PTC heater
- Malfunction of the A/C control unit
- Malfunction of the onboard charger/DC-DC converter
- Malfunction of the EMCU
- Malfunction of the A/C compressor

DIAGNOSIS

STEP 1. Using scan tool MB991958, diagnose the CAN bus lines.

Use the scan tool to diagnose the CAN bus lines.

Q: Is the check result normal?

YES : Go to Step 3.
NO : Repair the CAN bus line (Refer to GROUP 54C – CAN Bus Diagnostics Table). Then go to Step 2.

STEP 2. DTC recheck after resetting CAN bus lines

Check again if the DTC P0AE2 is set to the EV-ECU.
(1) Erase the DTC.
(2) Set the electric motor switch from the "LOCK" (OFF) position to the "ON", and then to the "START" position temporarily.
(3) After the electric motor switch from the "LOCK" (OFF) position, reset the electric motor switch from the "LOCK" (OFF) position to the "ON" position.
(4) Check if the DTC is set.

Q: Is the DTC set?

YES : Go to Step 3.
NO : This diagnosis is complete.

STEP 3. Connector check: C-22 traction battery connector, C-111 EV-ECU connector

Q: Is the check result normal?

YES : Go to Step 4.
NO : Repair the damaged connector.

STEP 4. Check the wiring harness between C-111 EV-ECU connector terminal No. 107 and C-22 traction battery connector terminal No. 3.

Check the signal lines for short to power supply.

Q: Is the check result normal?

YES : Go to Step 5.
NO : Repair the wiring harness.

STEP 5. Voltage measurement at G-19 high-voltage, service plug connector

⚠ ***DANGER***

Carry out the check on the high-voltage circuit while reading carefully the precautions on handling a high-voltage vehicle.

⚠ ***DANGER***

Be sure to wear the specified protective equipment when removing the service plug.

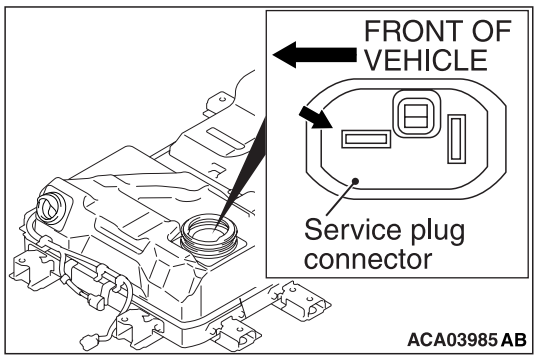

(1) Using a high voltage multimeter, measure the high voltage between the G-19 connection terminal and service plug connection forward terminal.

OK: 0 V

Q: Is the check result normal?

YES : Go to Step 6.
NO : Go to Step 14.

STEP 6. Using scan tool other DTC.

Check if the DTC except No. P1A16 or P1A26 is set to the EV-ECU.

Q: Is the DTC set?

YES : Carry out troubleshooting for the DTC.
NO : Go to Step 7.

STEP 7. Using scan tool other systems DTC.

Check if the DTC is set to the A/C control unit.

Q: Is the DTC set?

YES : Carry out troubleshooting for the DTC.
NO : Go to Step 8

STEP 8. Measure the resistance of the G-21 EV water PTC heater connector.

⚠ ***DANGER***

Carry out the check on the high-voltage circuit while reading carefully the precautions on handling a high-voltage vehicle.

⚠ ***DANGER***

Wear the specified protection equipment during the check.

(1) Remove the service plug.
(2) Disconnect the EV water PTC heater connector.
(3) Measure it on the resistance at the EV water PTC heater side.
(4) Measure the resistance between the G-21 EV water PTC heater connector terminal No.1 and No.2.

OK: 1 MΩ or more

Q: Is the check result normal?

YES : Go to Step 9.
NO : Check the high-voltage fuse No.3 (Refer to). Replace the EV water PTC heater (Refer to GROUP 55 - EV Water PTC Heater).

STEP 9. Measure the resistance at A-113 EV water PTC heater connector.

(1) Disconnect the A-113 EV water PTC heater connector and measure it on the resistance at the EV water PTC heater side.
(2) Measure the resistance between the A-113 EV water PTC heater connector terminal No.3, 4, 5 and the body ground.

OK: No continuity

Q: Is the check result normal?

YES : Go to Step 10.
NO : Replace the EV water PTC heater (Refer to GROUP 55 - EV Water PTC Heater).

STEP 10. Measure the resistance at A-113 EV water PTC heater connector.

(1) Disconnect the A-113 EV water PTC heater connector and measure it on the resistance at the wiring harness side.
(2) Measure the resistance between the A-113 EV water PTC heater connector terminal No.3, 4, 5 and the body ground.

OK: No continuity

Q: Is the check result normal?

YES : Go to Step 13.
NO : Go to Step 11.

To Attached sheet 24
(1/11－4/11)

STEP 11. Connector check: A-113 EV water PTC heater connector, B-01 joint connector, C-113 A/C control unit connector.

Q: Is the check result normal?

YES : Go to Step 12.
NO : Repair the damaged connector.

STEP 12. Check the wiring harness between A-113 EV water PTC heater connector terminal No. 3, 4, 5 and C-113 A/C control unit connector terminal No. 34, 35, 36.
Check the signal line for short circuit.

Q: Is the check result normal?

YES : Replace the A/C control unit (Refer to GROUP 55 - A/C Control Unit).
NO : Repair the wiring harness.

STEP 13. Check whether the DTC is reset.
Check again if the DTC is set to the EV-ECU.
(1) Erase the DTC.
(2) Set the electric motor switch from the "LOCK" (OFF) position to the "ON", and then to the "START" position temporarily.
(3) After the electric motor switch from the "LOCK" (OFF) position, reset the electric motor switch from the "LOCK" (OFF) position to the "ON" position.
(4) Check if the DTC is set.

Q: Is the DTC P0AA1 set?

YES : Replace the EV-ECU (Refer to). Then go to Step14 .
NO : Intermittent malfunction (Refer to GROUP 00 – How to Use Troubleshooting/Inspection Service Points, How to Cope with Intermittent Malfunctions).

STEP 14. Check whether the DTC is reset.
Check again if the DTC is set to the EV-ECU.
(1) Erase the DTC.
(2) Set the electric motor switch from the "LOCK" (OFF) position to the "ON", and then to the "START" position temporarily.
(3) After the electric motor switch from the "LOCK" (OFF) position, reset the electric motor switch from the "LOCK" (OFF) position to the "ON" position.
(4) Check if the DTC is set.

Q: Is the DTC P0AA1 set?

YES : Replace the traction battery assembly (Refer to). Then go to Step15.
NO : The diagnosis is complete.

STEP 15. Check whether the DTC is reset.

Check again if the DTC is set to the EV-ECU.

(1) Erase the DTC.
(2) Set the electric motor switch from the "LOCK" (OFF) position to the "ON", and then to the "START" position temporarily.
(3) After theelectric motor switch from the "LOCK" (OFF) position, reset the electric motor switch from the "LOCK" (OFF) position to the "ON" position.
(4) Check if the DTC is set.

Q: Is the DTC P0AA1 set?

YES : Return to Step 1.
NO : The diagnosis is complete.

Replace with attached sheets 25 (5/10－10/10)

<New>

Attached sheet 25 (1/10)

<Old>

DTC P0AA4 Main contactor (–) (seizure)

HIGH VOLTAGE POWER SUPPLY CONTROL SYSTEM CIRCUIT

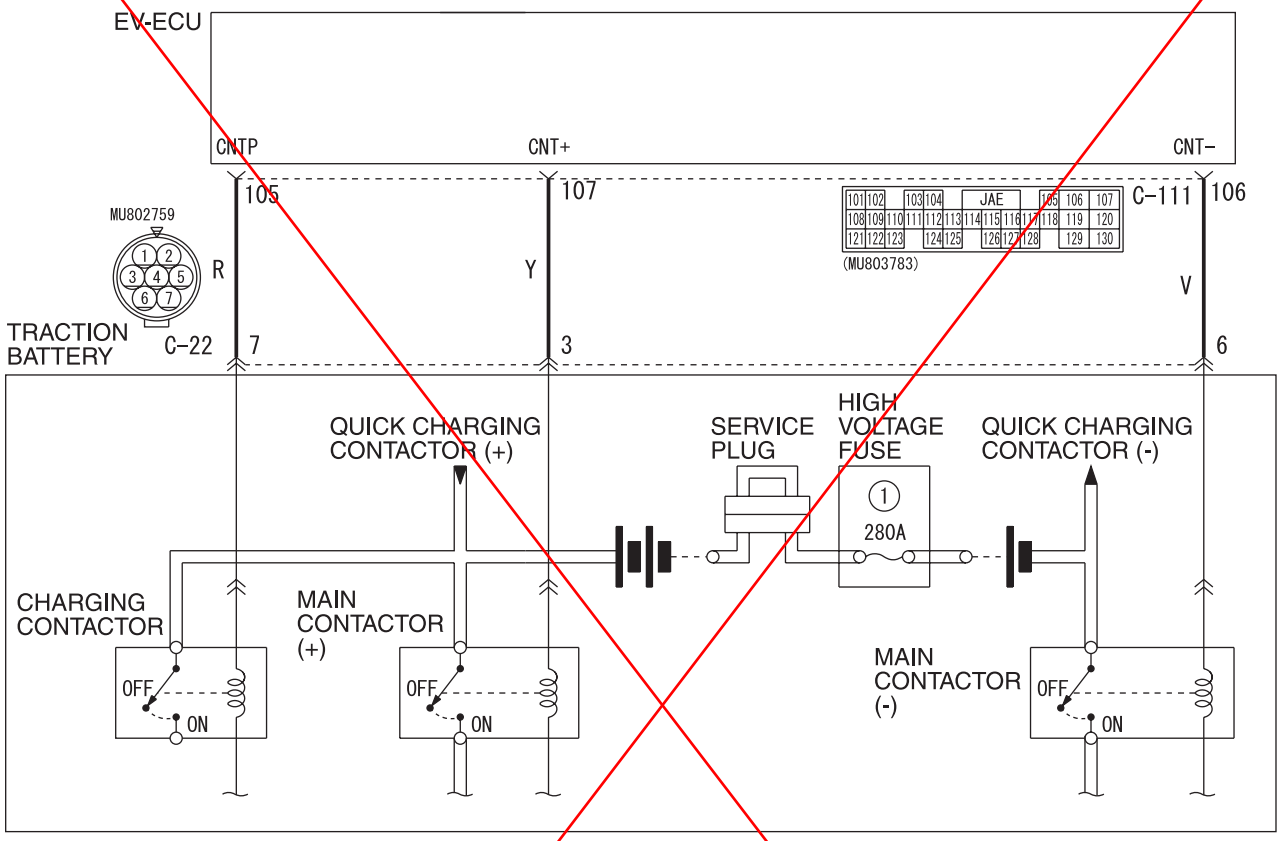

Wire colour code
B : Black LG : Light green G : Green L : Blue W : White Y : Yellow SB : Sky blue
BR : Brown O : Orange GR : Grey R : Red P : Pink V : Violet PU : Purple SI : Silver

ACA03485 AC

Connector: C-22

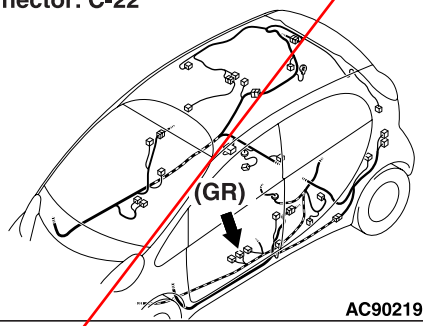

AC902191AO

Connector: C-111
Rear floor lower part

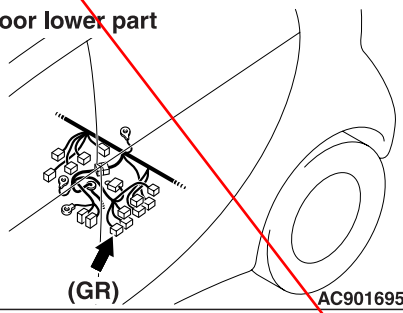

AC901695 AM

TSB Revision

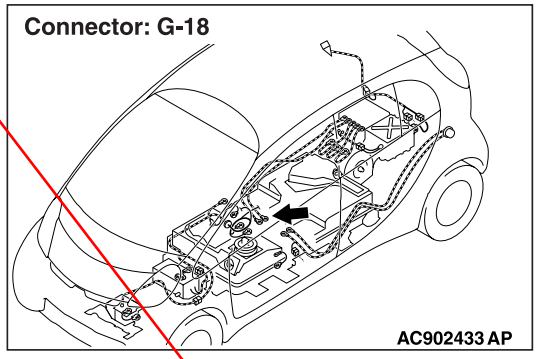

⚠ *DANGER*

- ***When servicing the high voltage system parts, always shut off the high voltage by removing the service plug (Refer to .).***
- ***When servicing the high voltage system parts, always wear the protective equipment or armor to measure the high voltage (Refer to .).***

⚠ **CAUTION**

If there is any problem in the CAN bus lines, an incorrect diagnostic trouble code may be set. Prior to this diagnosis, always diagnose the CAN bus lines.

OPERATION

- The smooth condenser in the EMCU is controlled by the EV-ECU, connects and shuts down the high-voltage circuit via the main contactor (+) and (–) in the traction battery.

DTC SET CONDITION

- If a seizure of the main contactor (–) is determined when the high-voltage circuit is activated, the DTC P0AA4 will be set.

PROBABLE CAUSES

- Damaged wiring harness or connector(s)
- Malfunction of the traction battery
- Malfunction of the EV-ECU

DIAGNOSIS

STEP 1. Using scan tool MB991958, diagnose the CAN bus lines.

Use the scan tool to diagnose the CAN bus lines.

Q: Is the check result normal?

YES : Go to Step 3.
NO : Repair the CAN bus line (Refer to GROUP 54C – CAN Bus Diagnostics Table .). Then go to Step 2.

STEP 2. DTC recheck after resetting CAN bus lines

Check again if the DTC P0AA4 is set to the EV-ECU.
(1) Erase the DTC.
(2) Set the electric motor switch from the "LOCK" (OFF) position to the "ON", and then to the "START" position temporarily.
(3) Check if the DTC is set.

Q: Is the DTC P0AA4 set?

YES : Go to Step 3.
NO : This diagnosis is complete.

STEP 3. Connector check: C-22 traction battery connector, C-111 EV-ECU connector

Q: Is the check result normal?

YES : Go to Step 4.
NO : Repair the damaged connector.

STEP 4. Check the wiring harness between C-111 EV-ECU connector terminal No. 106, 107 and C-22 traction battery connector terminal No. 3, 6.

Check the signal lines for short to power supply.

Q: Is the check result normal?

YES : Go to Step 5.
NO : Repair the wiring harness.

STEP 5. Voltage measurement at G-18 high-voltage, service plug connector

⚠ ***DANGER***

When servicing the high voltage system parts, always wear the protective equipment or armor to measure the high voltage (Refer to .).

⚠ ***DANGER***

Be sure to wear the specified protective equipment when removing the service plug.

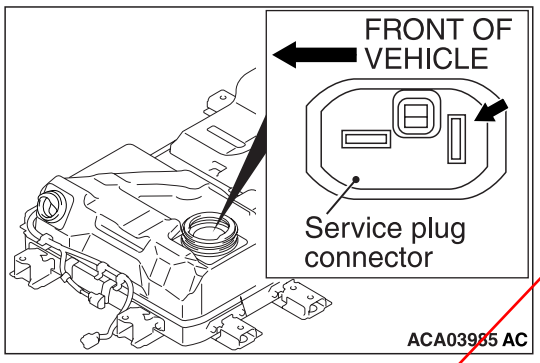

(1) Using a high voltage multimeter, measure the high voltage between the G-18 connection terminal and service plug connection backward terminal.

OK: 0 V

Q: Is the check result normal?

YES : Go to Step 6.
NO : Go to Step 7.

STEP 6. Check whether the DTC is reset.

Check again if the DTC is set to the EV-ECU.
(1) Erase the DTC.
(2) Set the electric motor switch from the "LOCK" (OFF) position to the "ON", and then to the "START" position temporarily.
(3) Check if the DTC is set.

Q: Is the DTC P0AA4 set?

YES : Replace the EV-ECU (Refer to .). Then go to Step 7.
NO : Intermittent malfunction (Refer to GROUP 00 – How to Use Troubleshooting/Inspection Service Points, How to Cope with Intermittent Malfunctions .).

<Old>

STEP 7. Check whether the DTC is reset.
Check again if the DTC is set to the EV-ECU.
(1) Erase the DTC.
(2) Set the electric motor switch from the "LOCK" (OFF) position to the "ON", and then to the "START" position temporarily.
(3) Check if the DTC is set.

Q: Is the DTC P0AA4 set?

YES : Replace the traction battery (Refer to .). Then go to Step 8.
NO : The diagnosis is complete.

STEP 8. Check whether the DTC is reset.
Check again if the DTC is set to the EV-ECU.
(1) Erase the DTC.
(2) Set the electric motor switch from the "LOCK" (OFF) position to the "ON", and then to the "START" position temporarily.
(3) Check if the DTC is set.

Q: Is the DTC P0AA4 set?

YES : Return to Step 1.
NO : The diagnosis is complete.

DTC P0ABA Motor drive voltage sensor error (EMCU)

⚠ CAUTION
If there is any problem in the CAN bus lines, an incorrect DTC may be set. Prior to this diagnosis, always diagnose the CAN bus lines (Refer to GROUP 54C – CAN Bus Diagnostics Table .).

OPERATION
EMCU communicates with the EV-ECU via CAN.

DTC SET CONDITION
- When the DTC P0ABA is set to the EMCU, the DTC P0ABA will be set.

PROBABLE CAUSE
- Malfunction of the EMCU motor drive voltage sensor system

DIAGNOSIS

STEP 1. Using scan tool MB991958, diagnose the CAN bus lines.
Use the scan tool to diagnose the CAN bus lines.

Q: Is the check result normal?

YES : Go to Step 3.
NO : Repair the CAN bus line (Refer to GROUP 54C – CAN Bus Diagnostics Table .). Then go to Step 2.

To Attached sheet 25
(1/10－4/10)

Attached sheet 25 (5/10)

DTC P0AA4 Main contactor (–) (seizure)

HIGH VOLTAGE POWER SUPPLY CONTROL SYSTEM CIRCUIT

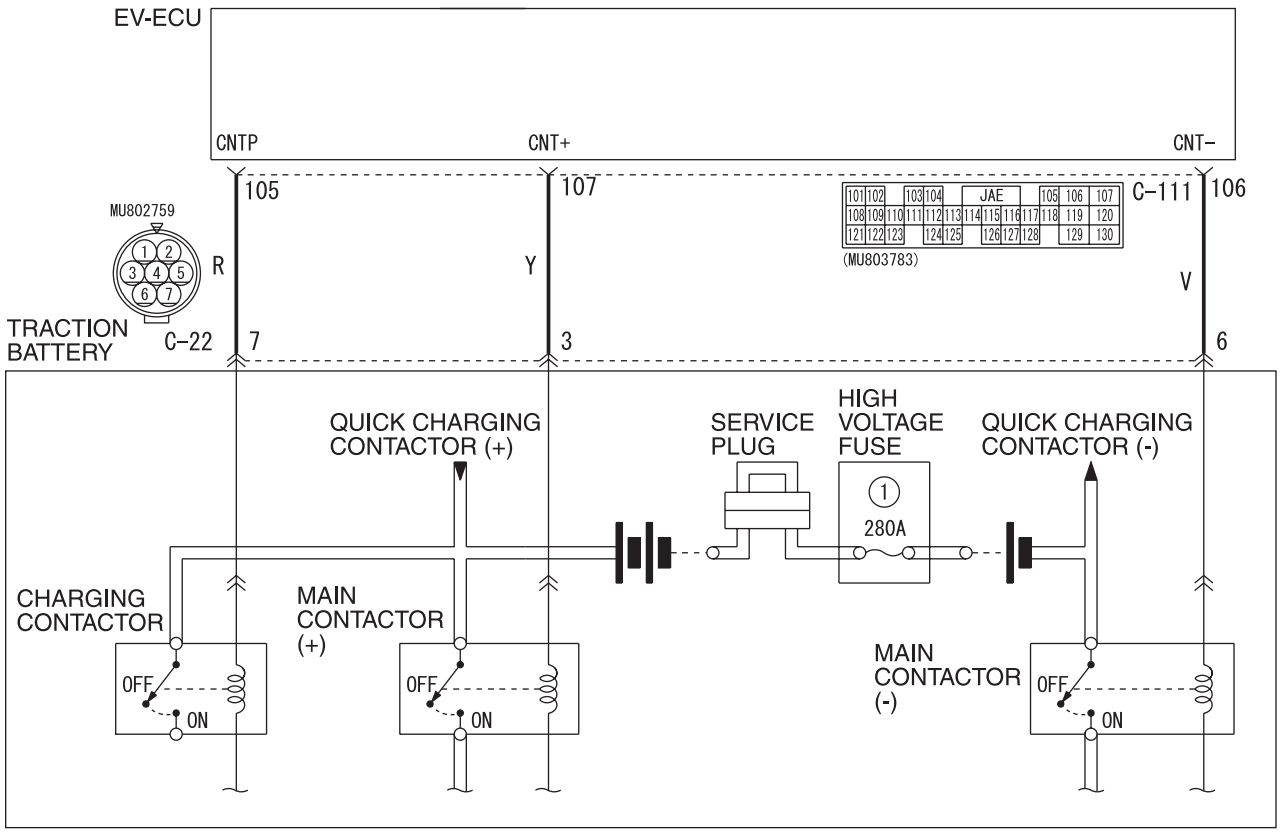

Wire colour code
B : Black LG : Light green G : Green L : Blue W : White Y : Yellow SB : Sky blue
BR : Brown O : Orange GR : Grey R : Red P : Pink V : Violet PU : Purple SI : Silver

ACA03485 AC

To Attached sheet 25
(1/10－4/10)

Attached sheet 25 (6/10)

A/C Control Circuit

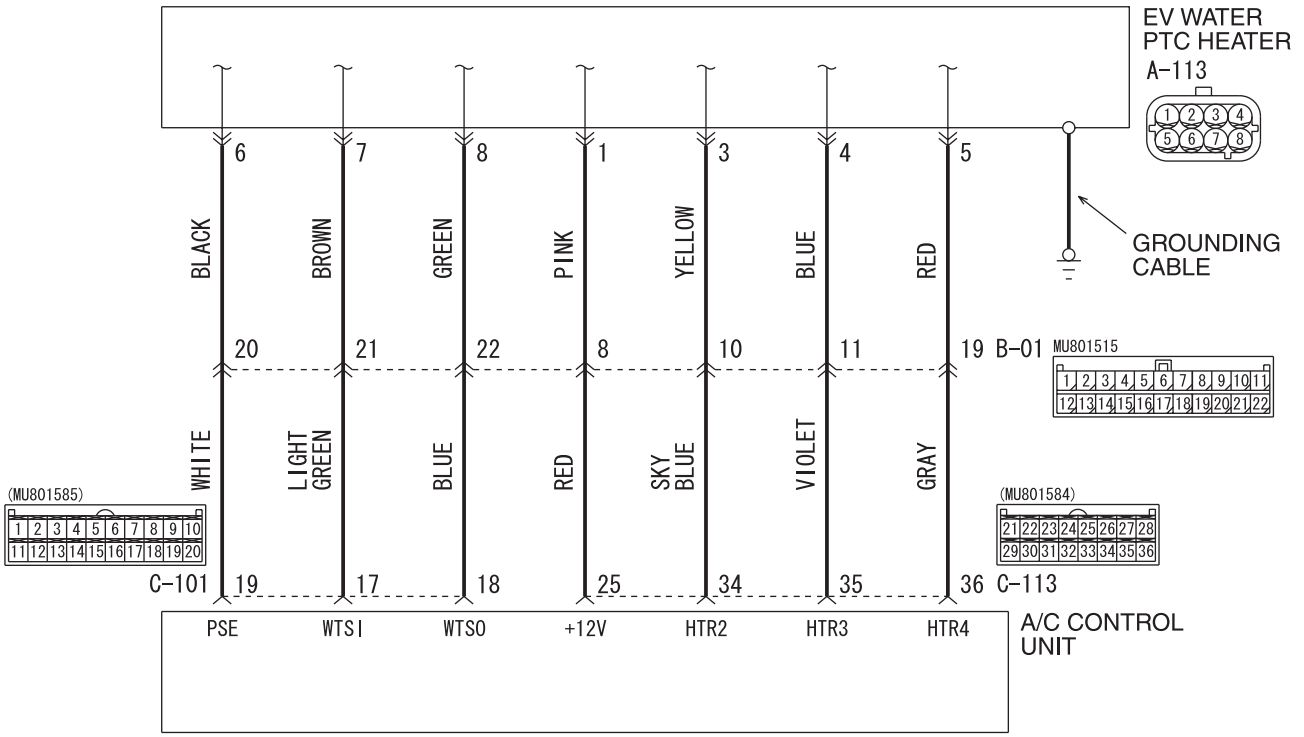

WDT55M008A

Connector: A-113

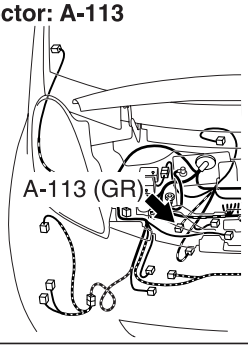

ACB01401AC

Connectors: C-111, C-113
Rear floor lower part

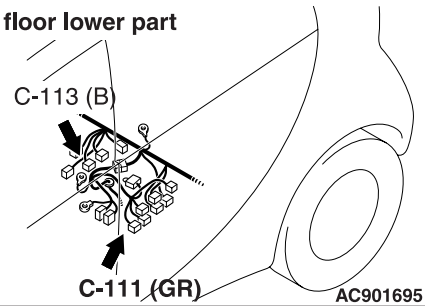

AC901695BG

Connector: C-22

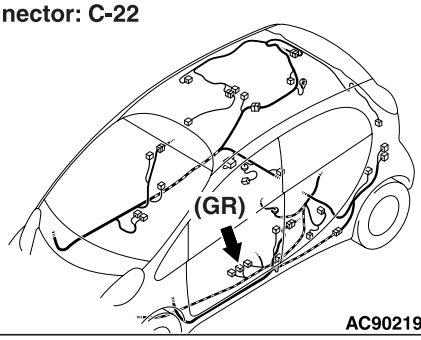

AC902191AO

Connectors: G-18, G-21

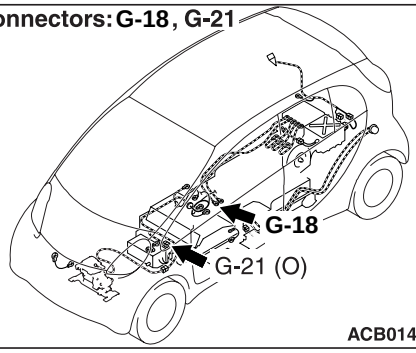

ACB01447AE

TSB Revision

To Attached sheet 25 (1/10—4/10)

⚠ ***DANGER***

- ***When servicing the high voltage system parts, always shut off the high voltage by removing the service plug (Refer to).***
- ***When servicing the high voltage system parts, always wear the protective equipment or armor to measure the high voltage (Refer to).***

⚠ **CAUTION**

If there is any problem in the CAN bus lines, an incorrect diagnostic trouble code may be set. Prior to this diagnosis, always diagnose the CAN bus lines (Refer to GROUP 54C – CAN Bus Diagnostics Table).

OPERATION

- The main contactors (+) and (-) the charging contactor inside the traction battery, which are controlled by the EV-ECU, activate and deactivate the high-voltage circuit. The EV-ECU monitors the voltage in the smoothing condenser in the EMCU.

DTC SET CONDITION

- If a seizure of the main contactor (–) is determined when the high-voltage circuit is activated, the DTC P0AA4 will be set.

PROBABLE CAUSES

- Damaged wiring harness or connector(s)
- Malfunction of the traction battery assembly
- Malfunction of the EV-ECU
- Malfunction of the EV water PTC heater
- Malfunction of the A/C control unit
- Malfunction of the onboard charger/DC-DC converter
- Malfunction of the EMCU
- Malfunction of the A/C compressor

DIAGNOSIS

STEP 1. Using scan tool MB991958, diagnose the CAN bus lines.

Use the scan tool to diagnose the CAN bus lines.

Q: Is the check result normal?

YES : Go to Step 3.
NO : Repair the CAN bus line (Refer to GROUP 54C – CAN Bus Diagnostics Table). Then go to Step 2.

STEP 2. DTC recheck after resetting CAN bus lines

Check again if the DTC P0AA4 is set to the EV-ECU.
(1) Erase the DTC.
(2) Set the electric motor switch from the "LOCK" (OFF) position to the "ON", and then to the "START" position temporarily.
(3) Check if the DTC is set.

Q: Is the DTC P0AA4 set?

YES : Go to Step 3.
NO : This diagnosis is complete.

STEP 3. Connector check: C-22 traction battery connector, C-111 EV-ECU connector

Q: Is the check result normal?

YES : Go to Step 4.
NO : Repair the damaged connector.

STEP 4. Check the wiring harness between C-111 EV-ECU connector terminal No. 106 and C-22 traction battery connector terminal No. 6.

Check the signal lines for short to power supply.

Q: Is the check result normal?

YES : Go to Step 5.
NO : Repair the wiring harness.

STEP 5. Voltage measurement at G-18 high-voltage, service plug connector

⚠ ***DANGER***

Carry out the check on the high-voltage circuit while reading carefully the precautions on handling a high-voltage vehicle.

⚠ ***DANGER***

Be sure to wear the specified protective equipment when removing the service plug.

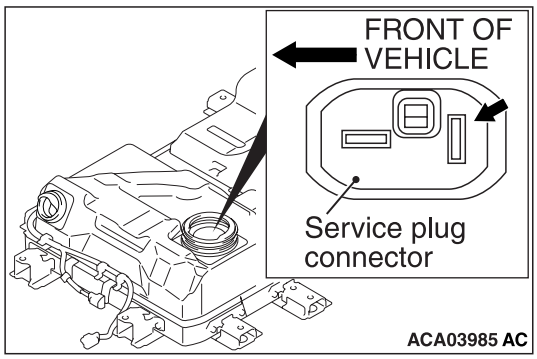

(1) Using a high voltage multimeter, measure the high voltage between the G-18 connection terminal and service plug connection backward terminal.

OK: 0 V

Q: Is the check result normal?

YES : Go to Step 6.
NO : Go to Step 14.

STEP 6. Usng scan tool other DTC.

Check if the DTC except No. P1A16 or P1A26 is set to the EV-ECU.

Q: Is the DTC set?

YES : Carry out troubleshooting for the DTC.
NO : Go to Step 7.

STEP 7. Using scan tool other systems DTC.

Check if the DTC is set to the A/C control unit.

Q: Is the DTC set?

YES : Carry out troubleshooting for the DTC.
NO : Go to Step 8.

STEP 8. Measure the resistance of the G-21 EV water PTC heater connector.

⚠ ***DANGER***

Carry out the check on the high-voltage circuit while reading carefully the precautions on handling a high-voltage vehicle.

⚠ ***DANGER***

Wear the specified protection equipment during the check.

(1) Remove the service plug.
(2) Disconnect the EV water PTC heater connector.
(3) Measure it on the resistance at the EV water PTC heater side.
(4) Measure the resistance between the G-21 EV water PTC heater connector terminal No.1 and No.2.

OK: 1 MΩ or more

Q: Is the check result normal?

YES : Go to Step 9.
NO : Check the high-voltage fuse No.3 (Refer to). Replace the EV water PTC heater (Refer to GROUP 55 - EV Water PTC Heater).

STEP 9. Measure the resistance at A-113 EV water PTC heater connector.

(1) Disconnect the A-113 EV water PTC heater connector and measure it on the resistance at the EV water PTC heater side.
(2) Measure the resistance between the A-113 EV water PTC heater connector terminal No. 3, 4, 5 and the body ground.

OK: No continuity

Q: Is the check result normal?

YES : Go to Step 10.
NO : Replace the EV water PTC heater (Refer to GROUP 55 - EV Water PTC Heater).

STEP 10. Measure the resistance at A-113 EV water PTC heater connector.

(1) Disconnect the A-113 EV water PTC heater connector and measure it on the resistance at the wiring harness side.
(2) Measure the resistance between the A-113 EV water PTC heater connector terminal No. 3, 4, 5 and the body ground.

OK: No continuity

Q: Is the check result normal?

YES : Go to Step 13.
NO : Go to Step 11.

STEP 11. Connector check: A-113 EV water PTC heater connector, B-01 joint connector, C-113 A/C control unit connector.

Q: Is the check result normal?

YES : Go to Step 12.
NO : Repair the damaged connector.

STEP 12. Check the wiring harness between A-113 EV water PTC heater connector terminal No. 3, 4, 5 and C-113 A/C control unit connector terminal No. 34, 35, 36.
Check the signal line for short circuit.

Q: Is the check result normal?

YES : Replace the A/C control unit.
NO : Repair the wiring harness.

STEP 13. Check whether the DTC is reset.
Check again if the DTC is set to the EV-ECU.
(1) Erase the DTC.
(2) Set the electric motor switch from the "LOCK" (OFF) position to the "ON", and then to the "START" position temporarily.
(3) Check if the DTC is set.

Q: Is the DTC P0AA4 set?

YES : Replace the EV-ECU (Refer to). Then go to Step 14.
NO : Intermittent malfunction (Refer to GROUP 00 – How to Use Troubleshooting/Inspection Service Points, How to Cope with Intermittent Malfunctions).

STEP 14. Check whether the DTC is reset.
Check again if the DTC is set to the EV-ECU.
(1) Erase the DTC.
(2) Set the electric motor switch from the "LOCK" (OFF) position to the "ON", and then to the "START" position temporarily.
(3) Check if the DTC is set.

Q: Is the DTC P0AA4 set?

YES : Replace the traction battery assembly (Refer to). Then go to Step 15.
NO : The diagnosis is complete.

STEP 15. Check whether the DTC is reset.
Check again if the DTC is set to the EV-ECU.
(1) Erase the DTC.
(2) Set the electric motor switch from the "LOCK" (OFF) position to the "ON", and then to the "START" position temporarily.
(3) Check if the DTC is set.

Q: Is the DTC P0AA4 set?

YES : Return to Step 1.
NO : The diagnosis is complete.

Replace with attached sheets 26 (4/9－9/9)

<New>

Attached sheet 26 (1/9)

<Old>

DTC P0AE2 Charging contactor (seizure)

HIGH VOLTAGE POWER SUPPLY CONTROL SYSTEM CIRCUIT

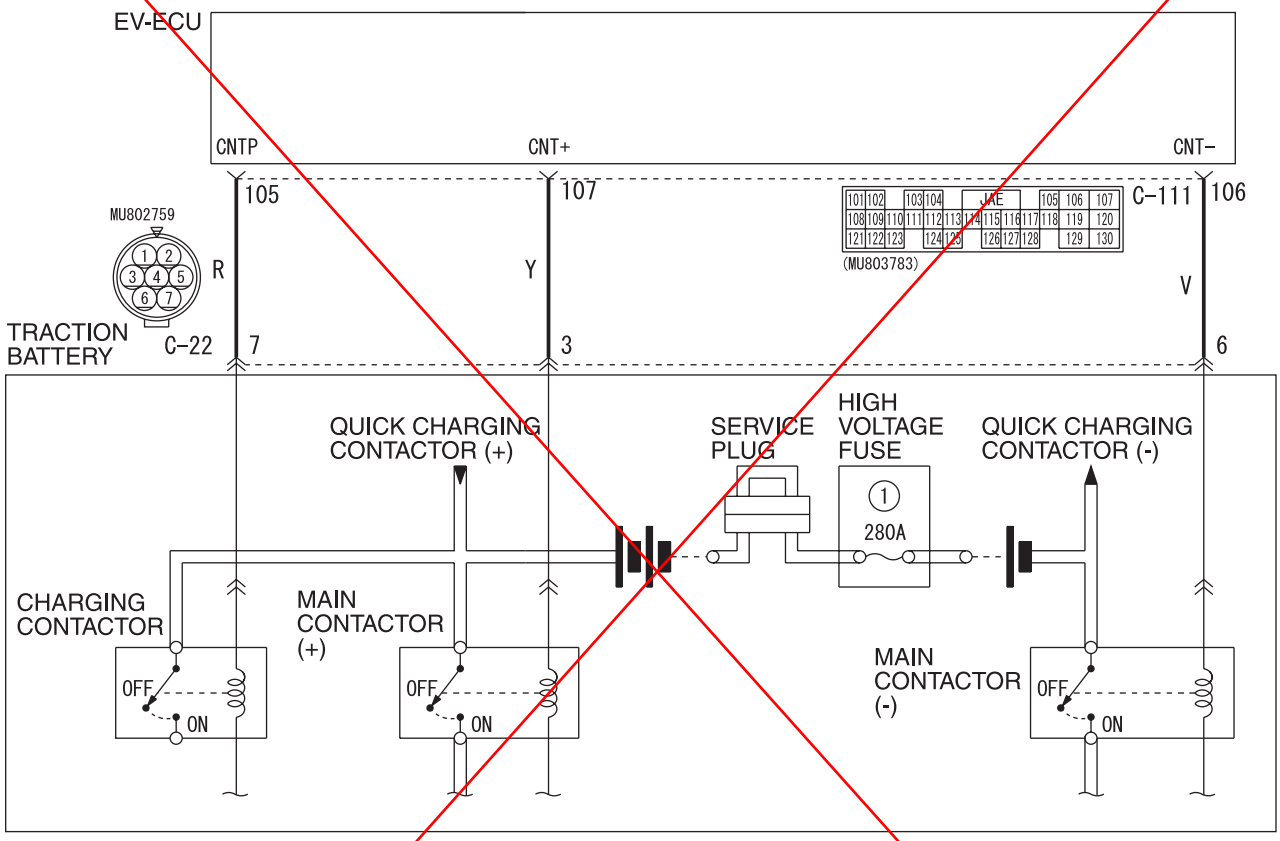

Wire colour code
B : Black LG : Light green G : Green L : Blue W : White Y : Yellow SB : Sky blue
BR : Brown O : Orange GR : Grey R : Red P : Pink V : Violet PU : Purple SI : Silver

ACA03485 AC

Connector: C-22

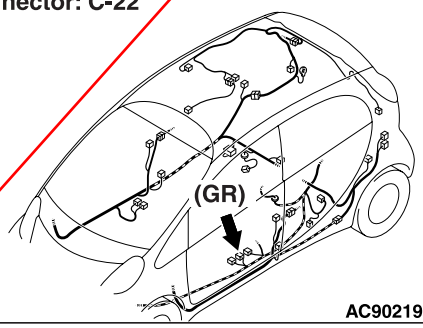

AC902191AO

Connector: C-111
Rear floor lower part

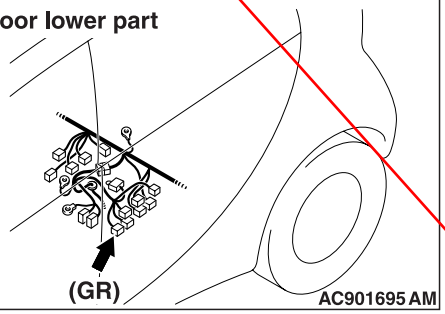

AC901695 AM

TSB Revision

Replace with attached sheets 26 (4/9－9/9)

<New>

Attached sheet 26 (2/9)

<Old>

⚠ *DANGER*

- ***When servicing the high voltage system parts, always shut off the high voltage by removing the service plug (Refer to .).***
- ***When servicing the high voltage system parts, always wear the protective equipment or armor to measure the high voltage (Refer to .).***

⚠ **CAUTION**

If there is any problem in the CAN bus lines, an incorrect DTC may be set. Prior to this diagnosis, always diagnose the CAN bus lines (Refer to GROUP 54C – CAN Bus Diagnostics Table .).

OPERATION

- The charging contactor in the traction battery is controlled by the EV-ECU and operates when the high-voltage circuit is activated.

DTC SET CONDITION

- If a seizure of the charging contactor is determined when the high-voltage circuit is shut down, the DTC P0AE2 will be set.

PROBABLE CAUSES

- Damaged wiring harness or connector(s)
- Malfunction of the traction battery
- Malfunction of the EV-ECU

DIAGNOSIS

STEP 1. Using scan tool MB991958, diagnose the CAN bus lines.

Use the scan tool to diagnose the CAN bus lines.

Q: Is the check result normal?

YES : Go to Step 3.
NO : Repair the CAN bus line (Refer to GROUP 54C – CAN Bus Diagnostics Table .). Then go to Step 2.

STEP 2. DTC recheck after resetting CAN bus lines

Check again if the DTC P0AE2 is set to the EV-ECU.
(1) Erase the DTC.
(2) Set the electric motor switch from the "LOCK" (OFF) position to the "ON", and then to the "START" position temporarily.
(3) Reset the electric motor switch from the "LOCK" (OFF) position to the "ON" position.
(4) Check if the DTC is set.

Q: Is the DTC set?

YES : Go to Step 3.
NO : This diagnosis is complete.

STEP 3. Connector check: C-22 traction battery connector, C-111 EV-ECU connector

Q: Is the check result normal?

YES : Go to Step 4.
NO : Repair the damaged connector.

STEP 4. Check the wiring harness between C-111 EV-ECU connector terminal No. 105 and C-22 traction battery connector terminal No. 7.

Check the output lines for open circuit and short to ground.

Q: Is the check result normal?

YES : Go to Step 5.
NO : Repair the wiring harness.

TSB Revision

<Old>

STEP 5. Check whether the DTC is reset.

Check again if the DTC is set to the EV-ECU.

(1) Erase the DTC.
(2) Set the electric motor switch from the "LOCK" (OFF) position to the "ON", and then to the "START" position temporarily.
(3) Reset the electric motor switch from the "LOCK" (OFF) position to the "ON" position.
(4) Check if the DTC is set.

Q: Is the DTC P0AE2 set?

YES : Replace the EV-ECU (Refer to .). Then go to Step 6.
NO : Intermittent malfunction (Refer to GROUP 00 – How to Use Troubleshooting/Inspection Service Points, How to Cope with Intermittent Malfunctions .).

STEP 6. Check whether the DTC is reset.

Check again if the DTC is set to the EV-ECU.

(1) Erase the DTC.
(2) Set the electric motor switch from the "LOCK" (OFF) position to the "ON", and then to the "START" position temporarily.
(3) Reset the electric motor switch from the "LOCK" (OFF) position to the "ON" position.
(4) Check if the DTC is set.

Q: Is the DTC P0AE2 set?

YES : Replace the traction battery (Refer to .). Then go to Step 7.
NO : The diagnosis is complete.

STEP 7. Check whether the DTC is reset.

Check again if the DTC is set to the EV-ECU.

(1) Erase the DTC.
(2) Set the electric motor switch from the "LOCK" (OFF) position to the "ON", and then to the "START" position temporarily.
(3) Reset the electric motor switch from the "LOCK" (OFF) position to the "ON" position.
(4) Check if the DTC is set.

Q: Is the DTC P0AE2 set?

YES : Return to Step 1.
NO : The diagnosis is complete.

DTC P0AE2 Charging contactor (seizure)

HIGH VOLTAGE POWER SUPPLY CONTROL SYSTEM CIRCUIT

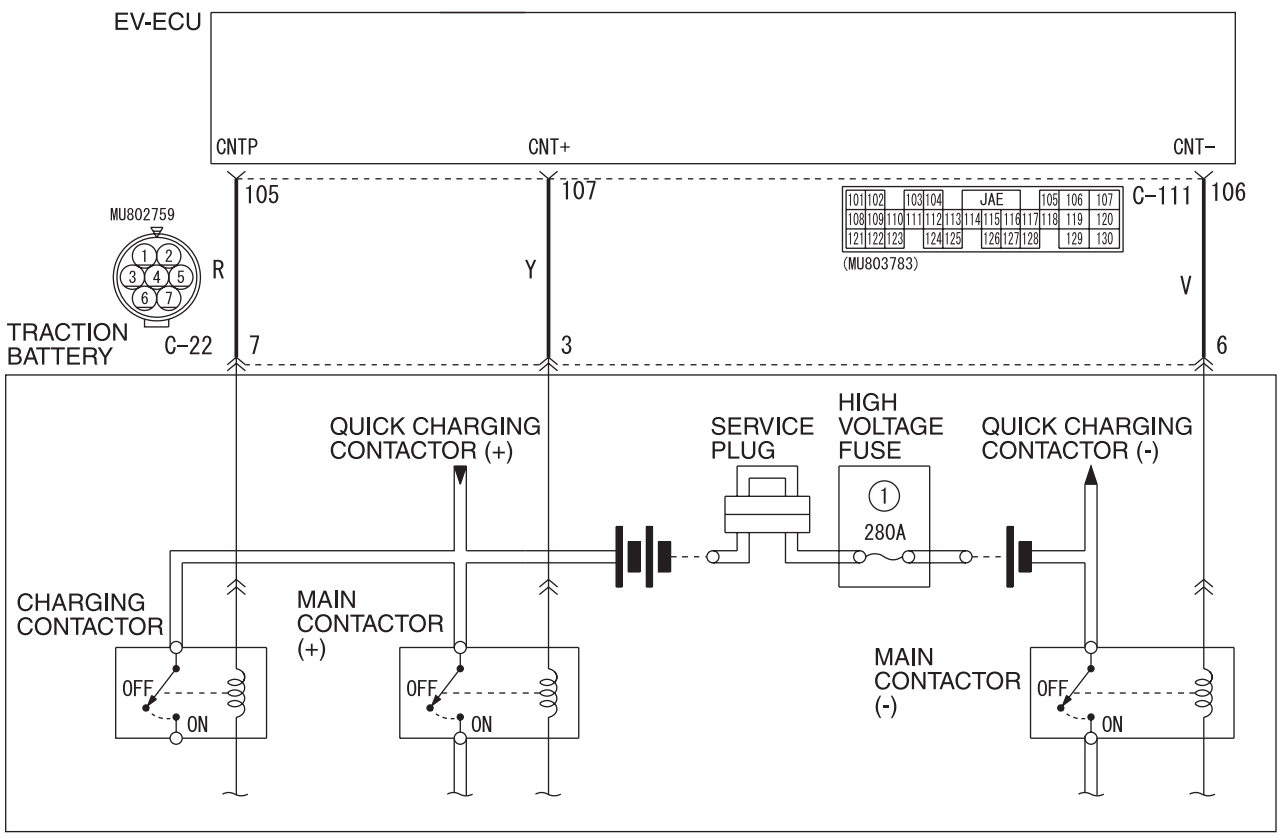

Wire colour code
B : Black LG : Light green G : Green L : Blue W : White Y : Yellow SB : Sky blue
BR : Brown O : Orange GR : Grey R : Red P : Pink V : Violet PU : Purple SI : Silver

ACA03485 AC

To Attached sheet 26
(1/9—3/9)

A/C Control Circuit

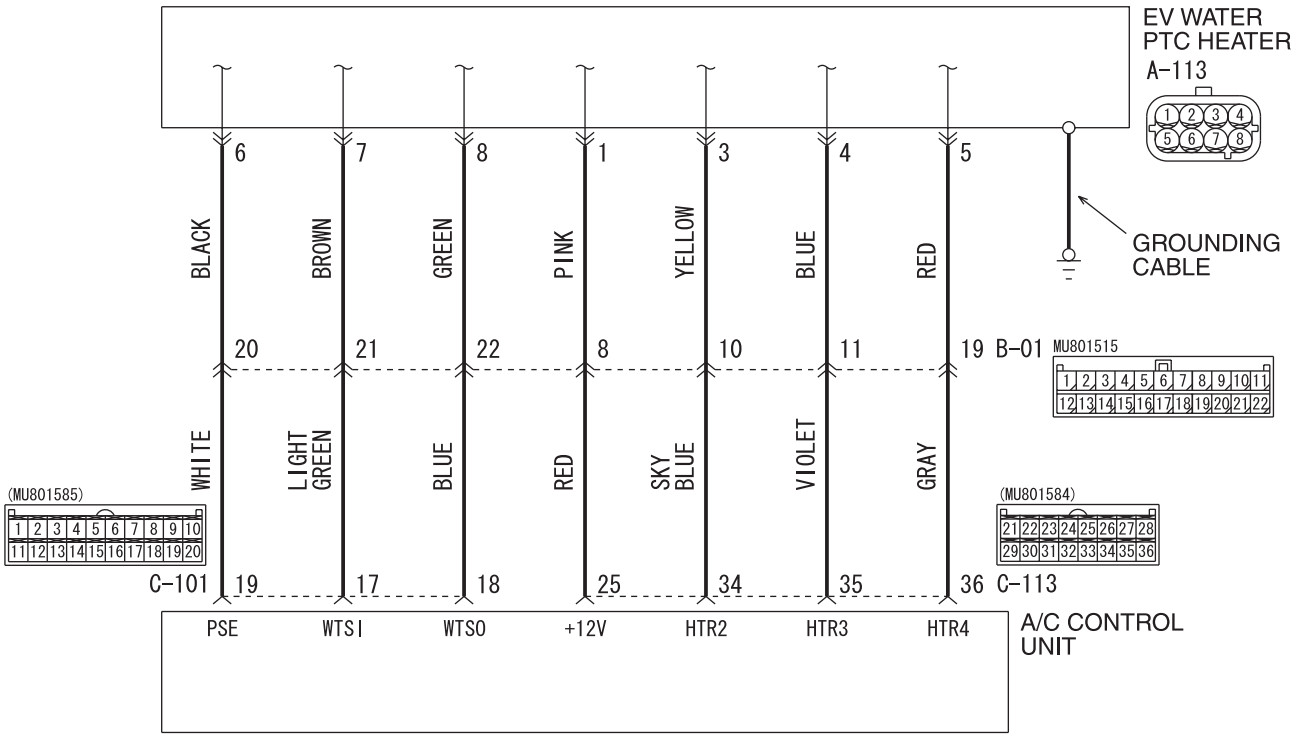

WDT55M008A

Connector: A-113

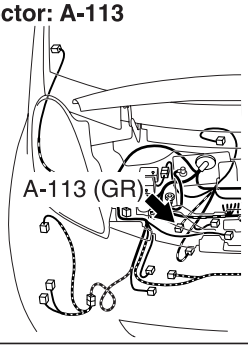

ACB01401AC

Connectors: C-111, C-113
Rear floor lower part

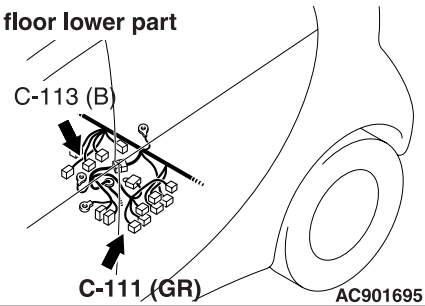

AC901695BG

Connector: C-22

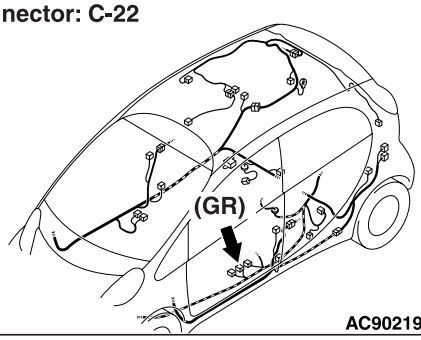

AC902191AO

Connectors: G-19, G-21

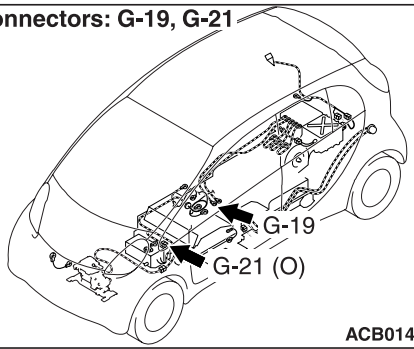

ACB01447AE

TSB Revision

To Attached sheet 26
(1/9－3/9)

⚠ ***DANGER***

- ***When servicing the high voltage system parts, always shut off the high voltage by removing the service plug (Refer to).***
- ***When servicing the high voltage system parts, always wear the protective equipment or armor to measure the high voltage (Refer to).***

⚠ **CAUTION**

If there is any problem in the CAN bus lines, an incorrect DTC may be set. Prior to this diagnosis, always diagnose the CAN bus lines (Refer to GROUP 54C – CAN Bus Diagnostics Table).

OPERATION

- The main contactors (+) and (-) the charging contactor inside the traction battery, which are controlled by the EV-ECU, activate and deactivate the high-voltage circuit. The EV-ECU monitors the voltage in the smoothing condenser in the EMCU.

DTC SET CONDITION

- If a seizure of the charging contactor or main contactor (+) is determined when the high-voltage circuit is activated, the DTC P0AE2 will be set.

PROBABLE CAUSES

- Damaged wiring harness or connector(s)
- Malfunction of the traction battery assembly
- Malfunction of the EV-ECU
- Malfunction of the EV water PTC heater
- Malfunction of the A/C compressor
- Malfunction of the onboard charger/DC-DC converter
- Malfunction of the EMCU

DIAGNOSIS

STEP 1. Using scan tool MB991958, diagnose the CAN bus lines.

Use the scan tool to diagnose the CAN bus lines.

Q: Is the check result normal?

YES : Go to Step 3.
NO : Repair the CAN bus line (Refer to GROUP 54C – CAN Bus Diagnostics Table). Then go to Step 2.

STEP 2. DTC recheck after resetting CAN bus lines

Check again if the DTC P0AE2 is set to the EV-ECU.
(1) Erase the DTC.
(2) Set the electric motor switch from the "LOCK" (OFF) position to the "ON", and then to the "START" position temporarily.
(3) Check if the DTC is set.

Q: Is the DTC set?

YES : Go to Step 3.
NO : This diagnosis is complete.

STEP 3. Connector check: C-22 traction battery connector, C-111 EV-ECU connector

Q: Is the check result normal?

YES : Go to Step 4.
NO : Repair the damaged connector.

To Attached sheet 26
(1/9－3/9)

STEP 4. Check the wiring harness between C-111 EV-ECU connector terminal No. 105 and C-22 traction battery connector terminal No. 7.

Check the output lines for open circuit and short to ground.

Q: Is the check result normal?

YES : Go to Step 5.
NO : Repair the wiring harness.

STEP 5. Voltage measurement at G-19 high-voltage connector, service plug

⚠ ***DANGER***

Carry out the check on the high-voltage circuit while reading carefully the precautions on handling a high-voltage vehicle.

⚠ ***DANGER***

Be sure to wear the specified protective equipment when removing the service plug.

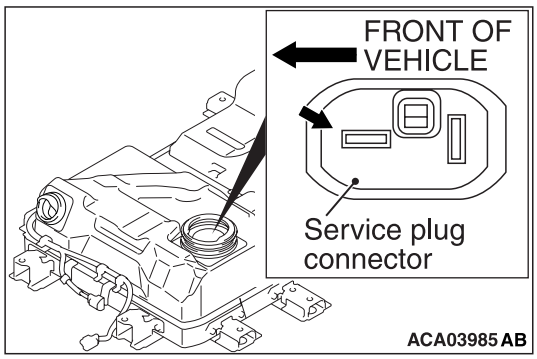

(1) Using a high voltage multimeter, measure the high voltage between the G-19 connection terminal and service plug forward terminal.

OK: 0 V

Q: Is the check result normal?

YES : Go to Step 6.
NO : Go to Step 14.

STEP 6. Using scan tool other DTC.

Check if the DTC except No. P1A16 or P1A26 is set to the EV-ECU.

Q: Is the DTC set?

YES : Carry out troubleshooting for the DTC.
NO : Go to Step 7.

STEP 7. Using scan tool other systems DTC.

Check if the DTC is set to the A/C control unit.

Q: Is the DTC set?

YES : Carry out troubleshooting for the DTC.
NO : Go to Step 8.

STEP 8. Measure the resistance of the G-21 EV water PTC heater connector.

⚠ ***DANGER***

Carry out the check on the high-voltage circuit while reading carefully the precautions on handling a high-voltage vehicle.

⚠ ***DANGER***

Wear the specified protection equipment during the check.

(1) Remove the service plug.
(2) Disconnect the G-21 EV water PTC heater connector.
(3) Measure it on the resistance at the EV water PTC heater side.
(4) Measure the resistance between the G-21 EV water PTC heater connector terminal No.1 and No.2.

OK: 1 MΩ or more

Q: Is the check result normal?

YES : Go to Step 9.
NO : Check the high-voltage fuse No.3 (Refer to). Replace the EV water PTC heater (Refer to GROUP 55 - EV Water PTC Heater).

STEP 9. Measure the resistance at A-113 EV water PTC heater connector.

(1) Disconnect the A-113 EV water PTC heater connector and measure it on the resistance at the EV water PTC heater side.
(2) Measure the resistance between the A-113 EV water PTC heater connector terminal No3, 4, 5 and the body ground.

OK: No continuity

Q: Is the check result normal?

YES : Go to Step 10.
NO : Replace the EV water PTC heater (Refer to GROUP 55 - EV Water PTC Heater).

STEP 10. Measure the resistance at A-113 EV water PTC heater connector.

(1) Disconnect the A-113 EV water PTC heater connector and measure it on the resistance at the wiring harness side.
(2) Measure the resistance between the A-113 EV water PTC heater connector terminal No.3, 4, 5 and the body earth.

OK: No continuity

Q: Is the check result normal?

YES : Go to Step 13.
NO : Go to Step 11.

STEP 11. Connector check: A-113 EV water PTC heater connector, B-01 joint connector, C-113 A/C control unit connector.

Q: Is the check result normal?

YES : Go to Step 12.
NO : Repair the damaged connector.

STEP 12. Check the wiring harness between A-113 EV water PTC heater connector terminal No. 3, 4, 5 and C-113 A/C control unit connector terminal No. 34, 35, 36.
Check the signal line for short circuit.

Q: Is the check result normal?

YES : Replace the A/C control unit (Refer to GROUP 55 - A/C Control Unit).
NO : Repair the wiring harness.

STEP 13. Check whether the DTC is reset.
Check again if the DTC is set to the EV-ECU.
(1) Erase the DTC.
(2) Set the electric motor switch from the "LOCK" (OFF) position to the "ON", and then to the "START" position temporarily.
(3) Check if the DTC is set.

Q: Is the DTC P0AE2 set?

YES : Replace the EV-ECU (Refer to). Then go to Step 14.
NO : Intermittent malfunction (Refer to GROUP 00 – How to Use Troubleshooting/Inspection Service Points, How to Cope with Intermittent Malfunctions).

STEP 14. Check whether the DTC is reset.
Check again if the DTC is set to the EV-ECU.
(1) Erase the DTC.
(2) Set the electric motor switch from the "LOCK" (OFF) position to the "ON", and then to the "START" position temporarily.
(3) Check if the DTC is set.

Q: Is the DTC P0AE2 set?

YES : Replace the traction battery assembly (Refer to). Then go to Step 15.
NO : The diagnosis is complete.

STEP 15. Check whether the DTC is reset.
Check again if the DTC is set to the EV-ECU.
(1) Erase the DTC.
(2) Set the electric motor switch from the "LOCK" (OFF) position to the "ON", and then to the "START" position temporarily.
(3) Check if the DTC is set.

Q: Is the DTC P0AE2 set?

YES : Return to Step 1.
NO : The diagnosis is complete.

Replace with attached sheets 27 (5/13－13/13)

<New>

Attached sheet 27 (1/13)

<Old>

DTC P1A15 High-voltage system error (1)

REGULAR CHARGING CONTROL SYSTEM CIRCUIT

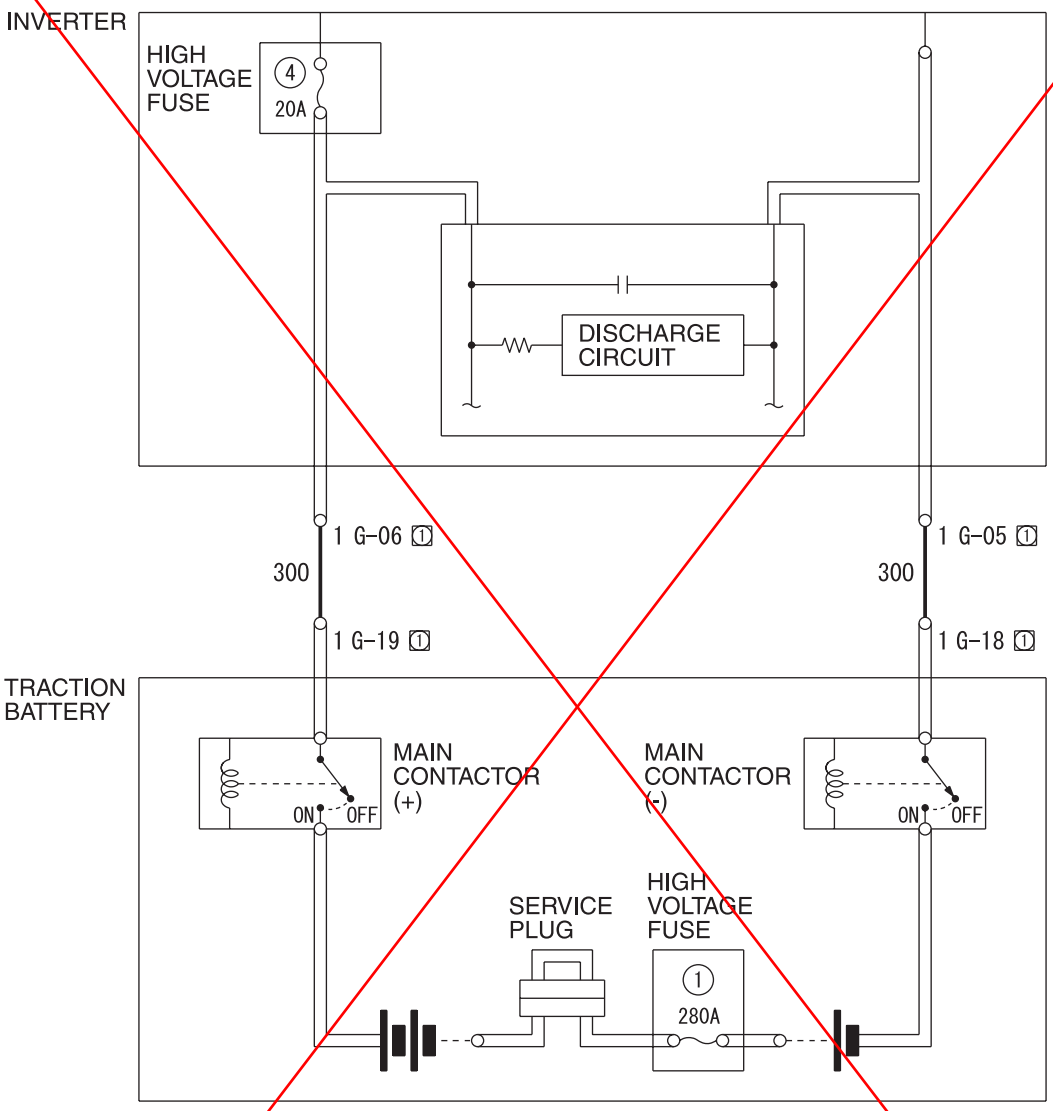

Wire colour code
B : Black LG : Light green G : Green L : Blue W : White Y : Yellow SB : Sky blue
BR : Brown O : Orange GR : Grey R : Red P : Pink V : Violet PU : Purple SI : Silver

ACA03511 AB

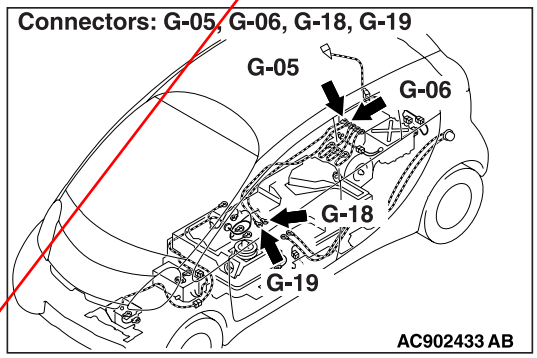

AC902433 AB

⚠ CAUTION

If there is any problem in the CAN bus lines, an incorrect DTC may be set. Prior to this diagnosis, always diagnose the CAN bus lines (Refer to GROUP 54C – CAN Bus Diagnostics Table .).

OPERATION

The high-voltage circuit activation and shutdown are controlled by the EV-ECU. The EV-ECU also monitors the voltage of the smooth condenser in the EMCU via the CAN communication.

TSB Revision

<Old>

DTC SET CONDITION

- If the charging time of the smooth condenser in the EMCU reaches the specified time or more, the DTC P1A15 will be set.

PROBABLE CAUSES

- Damaged wiring harness or connector(s)
- Malfunction of the high-voltage fuse No.1 (Main, 280A) (traction battery assembly)
- Malfunction of the traction battery assembly
- Malfunction of the EMCU

DIAGNOSIS

STEP 1. Using scan tool MB991958, diagnose the CAN bus lines

Use the scan tool to diagnose the CAN bus lines.

Q: Is the check result normal?

YES : Go to Step 3.
NO : Repair the CAN bus line. (Refer to GROUP 54C – CAN Bus Diagnostics Table .). Then go to Step 2.

STEP 2. DTC recheck after resetting CAN bus lines

Check again if the DTC P1A15 is set to the EV-ECU.
(1) Erase the DTC.
(2) Set the electric motor switch from the "LOCK" (OFF) position to the "ON" position.
(3) Set the electric motor switch to the "START" position, and start the electric motor unit.
(4) Check if the DTC is set.

Q: Is the DTC set?

YES : Go to Step 3.
NO : This diagnosis is complete.

STEP 3. High-voltage fuse No.1 (Main,280A) (traction battery assembly) check

Check the high-voltage fuse No.1 (Main, 280A) (Refer to .).

Q: Is the check result normal?

YES : Go to Step 4.
NO : Replace the high-voltage fuse No.1 (Main, 280A.).

STEP 4. Connector check: G-18, G-19 traction battery connector, G-05, G-06 inverter connector

⚠ DANGER

When servicing the high voltage system parts, always shut off the high voltage by removing the service plug (Refer to .).

⚠ DANGER

Be sure to wear the specified protective equipment when removing the service plug.

Q: Is the check result normal?

YES : Go to Step 5.
NO : Replace the wiring harness.

STEP 5. Check the wiring harness between G-05, G-06 inverter connector terminal and G-18, G-19 traction battery connector terminal.

⚠ ***DANGER***

When servicing the high voltage system parts, always shut off the high voltage by removing the service plug (Refer to .).

⚠ ***DANGER***

Be sure to wear the specified protective equipment when removing the service plug.

Check the high-voltage line for open circuit.

Q: Is the check result normal?

YES : Go to Step 6.
NO : Replace the wiring harness.

STEP 6. Check whether the DTC is reset.

Check again if the DTC is set to the EV-ECU.
(1) Erase the DTC.
(2) Set the electric motor switch from the "LOCK" (OFF) position to the "ON" position.
(3) Set the electric motor switch to the "START" position, and start the electric motor unit.
(4) Check if the DTC is set.

Q: Is the DTC P1A15 set?

YES : Go to Step 7.
NO : Intermittent malfunction (Refer to GROUP 00 – How to Use Troubleshooting/Inspection Service Points, How to Cope with Intermittent Malfunctions .).

STEP 7. Using scan tool MB991958, check freeze frame (FFD) data

Check the freeze frame data.

Freeze frame data

- Item No. 15 : EMCU: Condenser voltage

OK: 220 V or more

Q: Is the check result normal?

YES : Replace the inverter (Refer to .). Then go to Step 8.
NO : Replace the traction battery assembly (Refer to .). Then go to Step 8.

STEP 8. Check whether the DTC is reset.
Check again if the DTC is set to the EV-ECU.
(1) Erase the DTC.
(2) Set the electric motor switch from the "LOCK" (OFF) position to the "ON" position.
(3) Set the electric motor switch to the "START" position, and start the electric motor unit.
(4) Check if the DTC is set.

Q: Is the DTC P1A15 set?

YES : Return to Step 1.
NO : The diagnosis is complete.

DTC P1A16 High-voltage system error (2)

⚠ CAUTION
If there is any problem in the CAN bus lines, an incorrect DTC may be set. Prior to this diagnosis, always diagnose the CAN bus lines (Refer to GROUP 54C – CAN Bus Diagnostics Table .).

OPERATION
The high-voltage circuit activation and shutdown are controlled by the EV-ECU. The EV-ECU also monitors the voltage of the smooth condenser in the EMCU via the CAN communication.

DTC SET CONDITION
- If the discharging time of the smooth condenser in the EMCU reaches the specified time or more, the DTC P1A16 will be set.

PROBABLE CAUSES
- Malfunction of the EMCU
- Malfunction of the EV-ECU

DIAGNOSIS

STEP 1. Using scan tool MB991958, diagnose the CAN bus lines.
Use the scan tool to diagnose the CAN bus lines.

Q: Is the check result normal?

YES : Go to Step 3.
NO : Repair the CAN bus line (Refer to GROUP 54C – CAN Bus Diagnostics Table .). Then go to Step 2.

STEP 2. DTC recheck after resetting CAN bus lines
Check again if the DTC P1A16 is set to the EV-ECU.
(1) Erase the DTC.
(2) Start the electric motor unit, and then set the electric motor switch to the "LOCK" (OFF) position.
(3) Set the electric motor switch from the "LOCK" (OFF) position to the "ON" position.
(4) Check if the DTC is set.

Q: Is the DTC set?

YES : Go to Step 3.
NO : This diagnosis is complete.

DTC P1A15 High-voltage system error (1)

REGULAR CHARGING CONTROL SYSTEM CIRCUIT

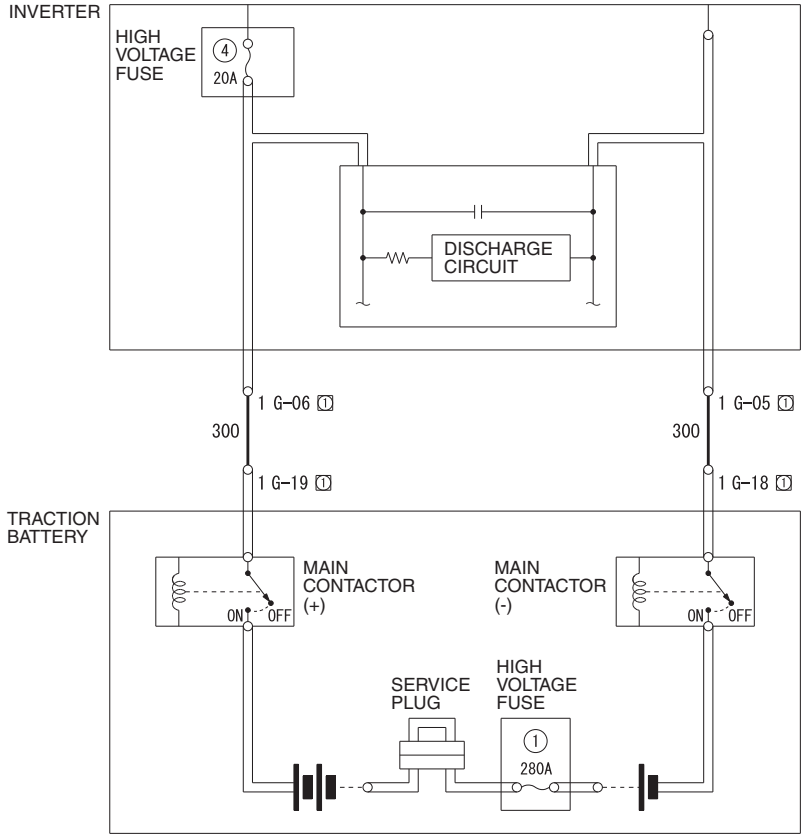

Wire colour code
B : Black LG : Light green G : Green L : Blue W : White Y : Yellow SB : Sky blue
BR : Brown O : Orange GR : Grey R : Red P : Pink V : Violet PU : Purple SI : Silver

ACA03511 AB

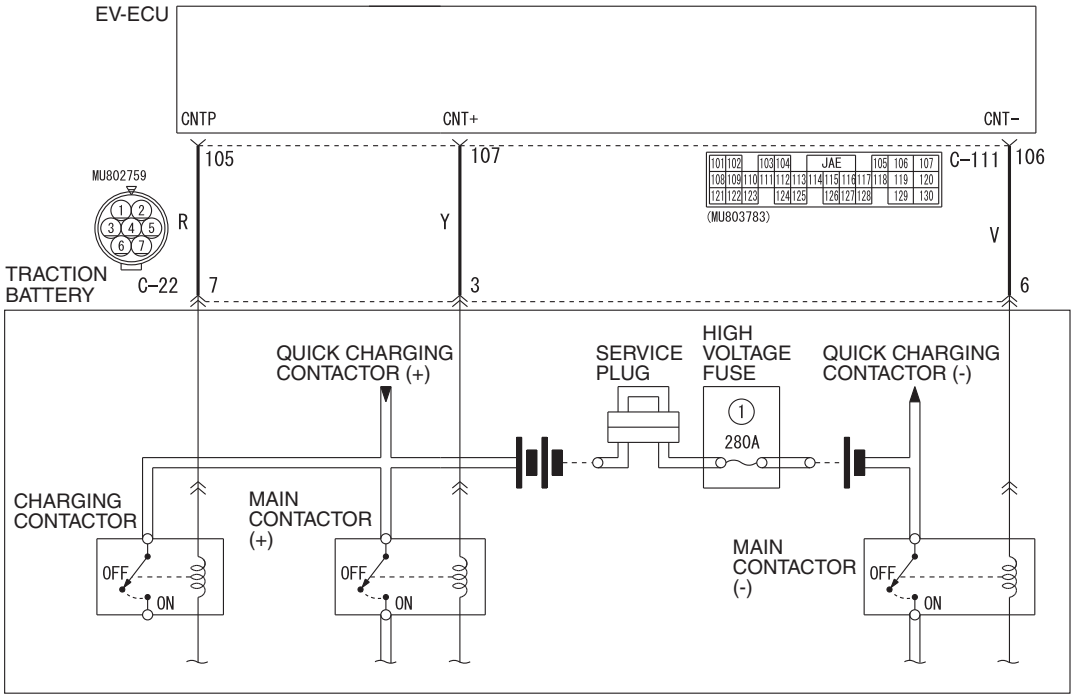

Wire colour code
B : Black LG : Light green G : Green L : Blue W : White Y : Yellow SB : Sky blue
BR : Brown O : Orange GR : Grey R : Red P : Pink V : Violet PU : Purple SI : Silver

ACA03485 AC

To Attached sheet 27
(1/13－4/13)

Attached sheet 27 (6/13)

A/C Control Circuit

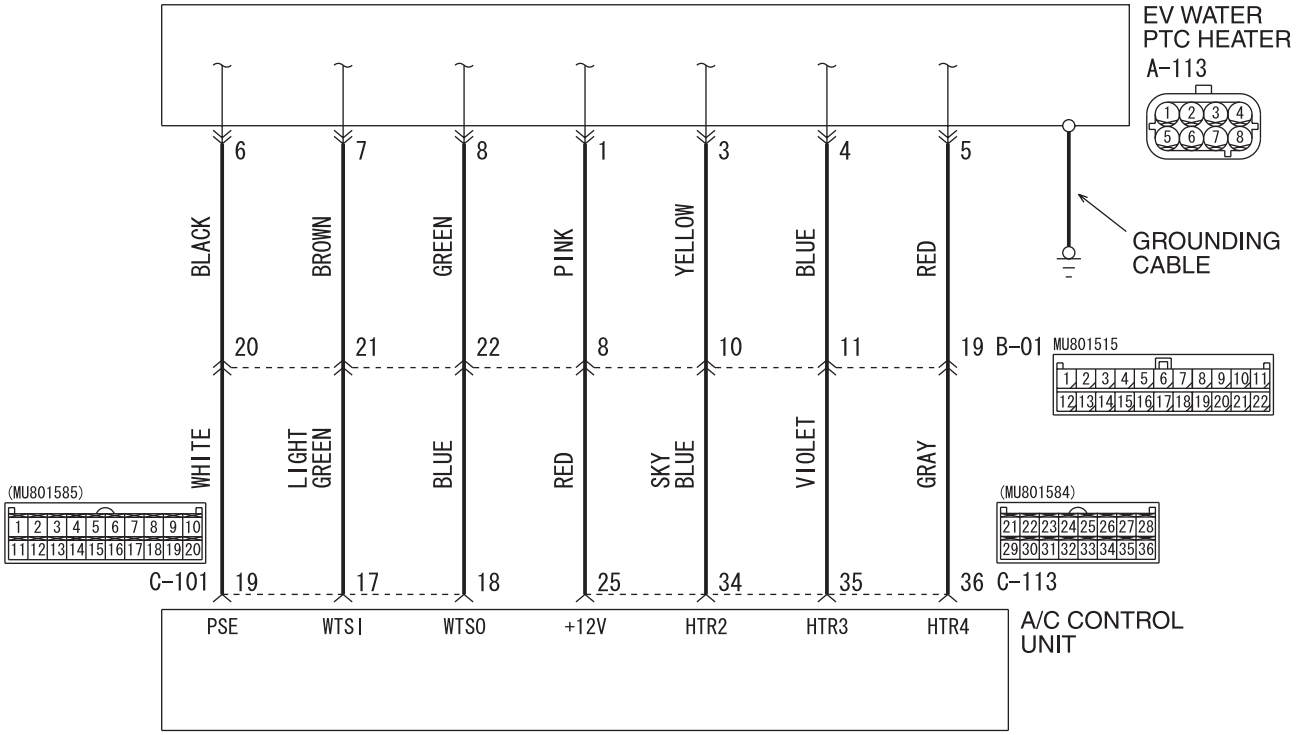

WDT55M008A

Connector: A-113

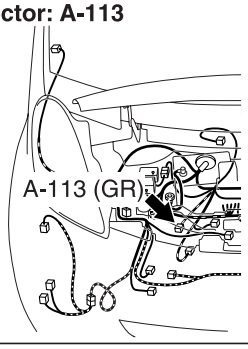

ACB01401AC

Connectors: C-111, C-113

Rear floor lower part

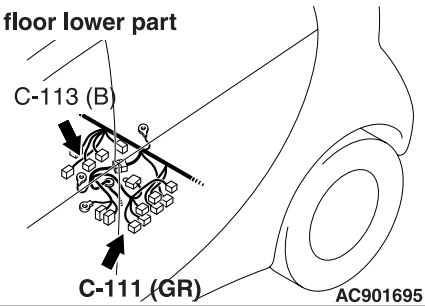

AC901695BG

Connector: C-22

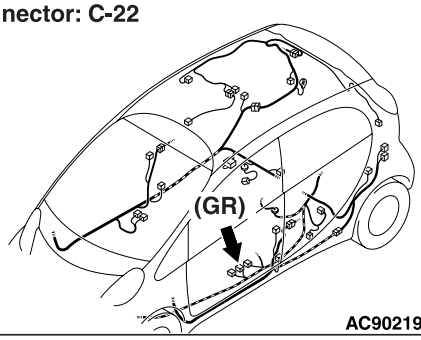

AC902191AO

Connectors: G-13, G-20, G-21

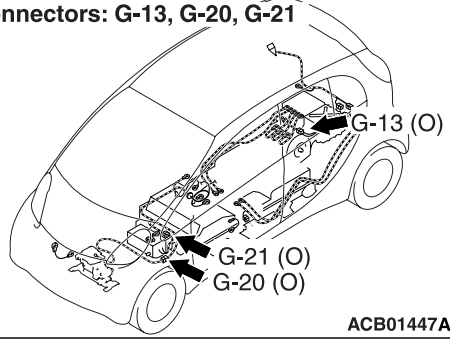

ACB01447AF

TSB Revision

To Attached sheet 27 (1/13－4/13)

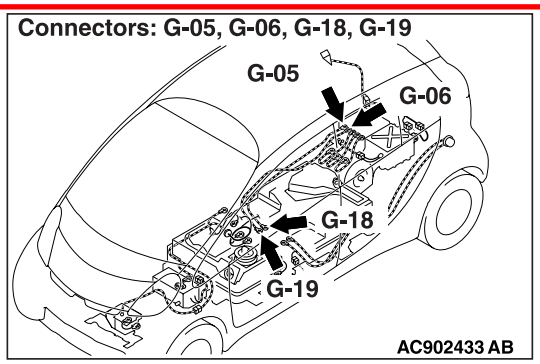

⚠ ***DANGER***

- ***When servicing the high voltage system parts, always shut off the high voltage by removing the service plug (Refer to).***
- ***When servicing the high voltage system parts, always wear the protective equipment or armor to measure the high voltage (Refer to).***

⚠ **CAUTION**

If there is any problem in the CAN bus lines, an incorrect DTC may be set. Prior to this diagnosis, always diagnose the CAN bus lines (Refer to GROUP 54C – CAN Bus Diagnostics Table).

OPERATION

The high-voltage circuit activation and shutdown are controlled by the EV-ECU. The EV-ECU also monitors the voltage of the smooth condenser in the EMCU via the CAN communication.

DTC SET CONDITION

- If the charging time of the smooth condenser in the EMCU reaches the specified time or more when the high-voltage circuit activation, the DTC P1A15 will be set.

PROBABLE CAUSES

- Damaged wiring harness or connector(s)
- Malfunction of the high-voltage fuse No.1 (Main, 280A) (traction battery assembly)
- Malfunction of the traction battery assembly
- Malfunction of the EMCU
- Malfunction of the EV water PTC heater
- Malfunction of the A/C control unit
- Malfunction of the onboard charger/DC-DC converter
- Malfunction of the A/C compressor

DIAGNOSIS

STEP 1. Using scan tool MB991958, diagnose the CAN bus lines

Use the scan tool to diagnose the CAN bus lines.

Q: Is the check result normal?

YES : Go to Step 3.
NO : Repair the CAN bus line. (Refer to GROUP 54C – CAN Bus Diagnostics Table). Then go to Step 2.

STEP 2. DTC recheck after resetting CAN bus lines

Check again if the DTC P1A15 is set to the EV-ECU.
(1) Erase the DTC.
(2) Set the electric motor switch from the "LOCK" (OFF) position to the "ON", and then to the "START" position temporarily.
(3) Check if the DTC is set.

Q: Is the DTC set?

YES : Go to Step 3.
NO : This diagnosis is complete.

STEP 3. Using scan tool other DTC.
Check if the DTC except No. No. P0AA1, P1A17 or P1AF2 is set to the EV-ECU.

Q: Is the DTC set?

YES : Carry out troubleshooting for the DTC.
NO : Go to Step 4.

STEP 4. Using scan tool other systems DTC.
Check if the DTC is set to the A/C control unit.

Q: Is the DTC set?

YES : Carry out troubleshooting for the DTC.
NO : Go to Step 5.

STEP 5. Using scan tool MB991958, check freeze frame (FFD) data
Check the freeze frame data.

Freeze frame data
- Item No. 15 : EMCU: Condenser voltage

OK: 220 V or more

Q: Is the check result normal?

YES : Go to Step 6.
NO : Go to Step 9.

STEP 6. Check whether the DTC is reset.

⚠ ***DANGER***
Carry out the check on the high-voltage circuit while reading carefully the precautions on handling a high-voltage vehicle.

⚠ ***DANGER***
Wear the specified protection equipment during the check.

Check again if the DTC is set to the EV-ECU.
(1) Remove the service plug.

⚠ ***DANGER***
Isolate bare wires of the disconnected high-voltage circuit with a plastic tape.

(2) Disconnect the G-21 EV water PTC heater connector.
(3) Installation the service plug.
(4) Set the electric motor switch from the "LOCK" (OFF) position to the "ON", and then to the "START" position temporarily.
(5) Check if the DTC is set.

Q: Is the DTC set?

YES : Go to Step 7.
NO : Go to Step 16.

To Attached sheet 27
(1/13－4/13)

STEP 7. Check whether the DTC is reset.

⚠ ***DANGER***

Carry out the check on the high-voltage circuit while reading carefully the precautions on handling a high-voltage vehicle.

⚠ ***DANGER***

Wear the specified protection equipment during the check.

Check again if the DTC is set to the EV-ECU.

(1) Remove the service plug.

⚠ ***DANGER***

Isolate bare wires of the disconnected high-voltage circuit with a plastic tape.

(2) Disconnect the G-20 A/C compressor connector.

(3) Installation the service plug.

(4) Set the electric motor switch from the "LOCK" (OFF) position to the "ON", and then to the "START" position temporarily.

(5) Check if the DTC is set.

Q: Is the diagnosis code set?

YES : Go to Step 8.

NO : Replace the A/C compressor (Refer to GROUP 55 - A/C Compressor).

STEP 8. Check whether the DTC is reset.

⚠ ***DANGER***

Carry out the check on the high-voltage circuit while reading carefully the precautions on handling a high-voltage vehicle.

⚠ ***DANGER***

Wear the specified protection equipment during the check.

Check again if the DTC is set to the EV-ECU.

(1) Remove the service plug.

⚠ ***DANGER***

Isolate bare wires of the disconnected high-voltage circuit with a plastic tape.

(2) Disconnect the G-13 onboard charger/DC-DC converter connector.

(3) Installation the service plug.

(4) Set the electric motor switch from the "LOCK" (OFF) position to the "ON", and then to the "START" position temporarily.

(5) Check if the DTC is set.

Q: Is the diagnosis code set?

YES : Replace the inverter (Refer to). Then go to Step 22.

NO : Replace the onboard charger/DC-DC converter (Refer to).

STEP 9. High-voltage fuse No.1 (Main,280A) (traction battery assembly) check

Check the high-voltage fuse No.1 (Main, 280A) (Refer to).

Q: Is the check result normal?

YES : Go to Step 11.
NO : Replace the high-voltage fuse No.1 (Main, 280A). Then go to Step 10

STEP 10. Using scan tool other systems DTC.

Check if the DTC is set to the EMCU.

Q: Is the DTC set?

YES : Carry out troubleshooting for the DTC.
NO : Go to Step 22.

STEP 11. Connector check: G-18, G-19 traction battery connector, G-05, G-06 inverter connector

⚠ ***DANGER***

Carry out the check on the high-voltage circuit while reading carefully the precautions on handling a high-voltage vehicle.

⚠ ***DANGER***

Be sure to wear the specified protective equipment when removing the service plug.

- Check whether terminals are engaged correctly (deformation or discolouration).
- Check whether the terminals are tightened to the specified torque (Refer to and).
- Check whether foreign materials are pinched.

Q: Is the check result normal?
Yes: Go to Step 12.
No: Reconnect the terminals or replace the traction battery cable.

STEP 12. Check the wiring harness between G-05, G-06 inverter connector terminal and G-18, G-19 traction battery connector terminal.

⚠ ***DANGER***

Carry out the check on the high-voltage circuit while reading carefully the precautions on handling a high-voltage vehicle.

⚠ ***DANGER***

Be sure to wear the specified protective equipment when removing the service plug.

Check the high-voltage line for damage.

Q: Is the check result normal?

YES : Go to Step 13.
NO : Replace the traction battery cable.

STEP 13. Connector check: C-22 traction battery connector, C-111 EV-ECU connector

Q: Is the check result normal?

YES : Go to Step 14.
NO : Repair the damaged connector

STEP 14. Check the wiring harness between C-111 EV-ECU connector terminal No. 105, 106, 107 and C-22 traction battery connector terminal No. 3, 6, 7.
Check the signal lines, ground line for open.

Q: Is the check result normal?

YES : Go to Step 15.
NO : Repair the wiring harness.

STEP 15. Check on main contactor (+), (-), charging contactor coil resistance of contactor.
Refer to

Q: Is the check result normal?

YES : Go to Step 16.
NO : Repair the traction battery assembly (Refer to).

STEP 16. Measure the resistance of the G-21 EV water PTC heater connector.

⚠ ***DANGER***
Carry out the check on the high-voltage circuit while reading carefully the precautions on handling a high-voltage vehicle.

⚠ ***DANGER***
Wear the specified protection equipment during the check.

(1) Remove the service plug.
(2) Disconnect the G-21 EV water PTC heater connector.
(3) Measure it on the resistance at the EV water PTC heater side.
(4) Measure the resistance between the G-21 EV water PTC heater connector terminal No.1 and No.2.

OK: 1 MΩ or more

Q: Is the check result normal?

YES : Go to Step 17.
NO : Check the high-voltage fuse No.3 (Refer to). Replace the EV water PTC heater (Refer to GROUP 55 - EV Water PTC Heater).

STEP 17. Measure the resistance at A-113 EV water PTC heater connector.

(1) Disconnect the A-113 EV water PTC heater connector and measure it on the resistance at the EV water PTC heater side.
(2) Measure the resistance between the A-113 EV water PTC heater connector terminal No.3, 4, 5 and the body ground.

OK: No continuity

Q: Is the check result normal?

YES : Go to Step 18. Check whether the DTC is reset.
NO : Replace the EV water PTC heater (Refer to GROUP 55 - EV Water PTC Heater).

STEP 18. Measure the resistance at A-113 EV water PTC heater connector.

(1) Disconnect the A-113 EV water PTC heater connector and measure it on the resistance at the wiring harness side.
(2) Measure the resistance between the A-113 EV water PTC heater connector terminal No.3, 4, 5 and the body earth.

OK: No continuity

Q: Is the check result normal?

YES : Go to Step 21.
NO : Go to Step 19.

STEP 19. Connector check: A-113 EV water PTC heater connector, B-01 joint connector, C-113 A/C control unit connector.

Q: Is the check result normal?

YES : Go to Step 20.
NO : Repair the damaged connector.

STEP 20. Check the wiring harness between A-113 EV water PTC heater connector terminal No. 3, 4, 5 and C-113 A/C control unit connector terminal No. 34, 35, 36.

Check the signal line for short circuit.

Q: Is the check result normal?

YES : Replace the A/C control unit.
NO : Repair the wiring harness.

To Attached sheet 27
(1/13－4/13)

STEP 21. Check whether the DTC is reset.

Check again if the DTC is set to the EV-ECU.

(1) Erase the stored DTC.
(2) Set the electric motor switch from the "LOCK" (OFF) position to the "ON", and then to the "START" position temporarily.
(3) Check if the DTC is set.

Q: Is the DTC set?

YES : Replace the traction battery assembly (Refer to). Then go to Step 22.
NO : Intermittent malfunction (Refer to GROUP 00 – How to Use Troubleshooting/Inspection Service Points, How to Cope with Intermittent Malfunctions).

STEP 22. Check whether the DTC is reset.

Check again if the DTC is set to the EV-ECU.

(1) Erase the stored DTC.
(2) Set the electric motor switch from the "LOCK" (OFF) position to the "ON", and then to the "START" position temporarily.
(3) Check if the DTC is set.

Q: Is the DTC set?

YES : Return to Step 1.
NO : The diagnosis is complete.

STEP 8. Check whether the DTC is reset.
Check again if the DTC is set to the EV-ECU.
(1) Erase the DTC.
(2) Set the electric motor switch from the "LOCK" (OFF) position to the "ON" position.
(3) Set the electric motor switch to the "START" position, and start the electric motor unit.
(4) Check if the DTC is set.

Q: Is the DTC P1A15 set?
YES : Return to Step 1.
NO : The diagnosis is complete.

<Old>

DTC P1A16 High-voltage system error (2)

⚠ CAUTION
If there is any problem in the CAN bus lines, an incorrect DTC may be set. Prior to this diagnosis, always diagnose the CAN bus lines (Refer to GROUP 54C – CAN Bus Diagnostics Table .).

OPERATION
The high-voltage circuit activation and shutdown are controlled by the EV-ECU. The EV-ECU also monitors the voltage of the smooth condenser in the EMCU via the CAN communication.

DTC SET CONDITION
- If the discharging time of the smooth condenser in the EMCU reaches the specified time or more, the DTC P1A16 will be set.

PROBABLE CAUSES
- Malfunction of the EMCU
- Malfunction of the EV-ECU

DIAGNOSIS

STEP 1. Using scan tool MB991958, diagnose the CAN bus lines.
Use the scan tool to diagnose the CAN bus lines.

Q: Is the check result normal?
YES : Go to Step 3.
NO : Repair the CAN bus line (Refer to GROUP 54C – CAN Bus Diagnostics Table .). Then go to Step 2.

STEP 2. DTC recheck after resetting CAN bus lines
Check again if the DTC P1A16 is set to the EV-ECU.
(1) Erase the DTC.
(2) Start the electric motor unit, and then set the electric motor switch to the "LOCK" (OFF) position.
(3) Set the electric motor switch from the "LOCK" (OFF) position to the "ON" position.
(4) Check if the DTC is set.

Q: Is the DTC set?
YES : Go to Step 3.
NO : This diagnosis is complete.

Replace with attached sheets 28 (3/4—4/4)

<New>

Attached sheet 28 (2/4)

<Old>

STEP 3. Check whether the DTC is reset.

Check again if the DTC is set to the EV-ECU.

(1) Erase the DTC.
(2) Start the electric motor unit, and then set the electric motor switch to the "LOCK" (OFF) position.
(3) Set the electric motor switch from the "LOCK" (OFF) position to the "ON" position.
(4) Check if the DTC is set.

Q: Is the DTC P1A16 set?

YES : Replace the inverter (Refer to .). Then go to Step 4.
NO : Intermittent malfunction (Refer to GROUP 00 – How to Use Troubleshooting/Inspection Service Points, How to Cope with Intermittent Malfunctions .).

STEP 4. Check whether the DTC is reset.

Check again if the DTC is set to the EV-ECU.

(1) Erase the DTC.
(2) Start the electric motor unit, and then set the electric motor switch to the "LOCK" (OFF) position.
(3) Set the electric motor switch from the "LOCK" (OFF) position to the "ON" position.
(4) Check if the DTC is set.

Q: Is the DTC P1A16 set?

YES : Replace the EV-ECU (Refer to .). Then go to Step 5.
NO : The diagnosis is complete.

STEP 5. Check whether the DTC is reset.

Check again if the DTC is set to the EV-ECU.

(1) Erase the DTC.
(2) Start the electric motor unit, and then set the electric motor switch to the "LOCK" (OFF) position.
(3) Set the electric motor switch from the "LOCK" (OFF) position to the "ON" position.
(4) Check if the DTC is set.

Q: Is the DTC P1A16 set?

YES : Return to Step 1.
NO : The diagnosis is complete.

To Attached sheet 28 (1/4－2/4)

DTC P1A16 High-voltage system error (2)

⚠ CAUTION
If there is any problem in the CAN bus lines, an incorrect DTC may be set. Prior to this diagnosis, always diagnose the CAN bus lines (Refer to GROUP 54C – CAN Bus Diagnostics Table).

OPERATION
The high-voltage circuit activation and shutdown are controlled by the EV-ECU. The EV-ECU also monitors the voltage of the smooth condenser in the EMCU via the CAN communication.

DTC SET CONDITION
- If the discharging time of the smooth condenser in the EMCU reaches the specified time or more when the high-voltage circuit is shut down, the DTC P1A16 will be set.

PROBABLE CAUSES
- Malfunction of the EMCU
- Malfunction of the EV-ECU
- Damaged wiring harness or connector(s)
- Malfunction of the EV water PTC heater
- Malfunction of the A/C control unit
- Malfunction of the A/C compressor
- Malfunction of the onboard charger/DC-DC converter
- Malfunction of the traction battery assembly

DIAGNOSIS

STEP 1. Using scan tool MB991958, diagnose the CAN bus lines.
Use the scan tool to diagnose the CAN bus lines.

Q: Is the check result normal?
YES : Go to Step 3.
NO : Repair the CAN bus line (Refer to GROUP 54C – CAN Bus Diagnostics Table). Then go to Step 2.

STEP 2. DTC recheck after resetting CAN bus lines
Check again if the DTC P1A16 is set to the EV-ECU.
(1) Erase the DTC.
(2) Set the electric motor switch from the "LOCK" (OFF) position to the "ON", and then to the "START" position temporarily.
(3) After the electric motor switch from the "LOCK" (OFF) position, reset the electric motor switch from the "LOCK" (OFF) position to the "ON" position.
(4) Check if the DTC is set.

Q: Is the DTC set?
YES : Go to Step 3.
NO : This diagnosis is complete.

STEP 3. Using scan tool other DTC.
Check if the DTC except No. No. P0AA1, P0AA2, P0AE2 or P1A15 is set to the EV-ECU.

Q: Is the DTC set?
YES : Carry out troubleshooting for the DTC.
NO : Go to Step 4.

STEP 4. Check whether the DTC is reset.

Check again if the DTC is set to the EV-ECU.

(1) Erase the DTC.
(2) Set the electric motor switch from the "LOCK" (OFF) position to the "ON", and then to the "START" position temporarily.
(3) After the electric motor switch from the "LOCK" (OFF) position, reset the electric motor switch from the "LOCK" (OFF) position to the "ON" position.
(4) Check if the DTC is set.

Q: Is the DTC P1A16 set?

YES : Replace the inverter (Refer to). Then go to Step 5.
NO : Intermittent malfunction (Refer to GROUP 00 – How to Use Troubleshooting/Inspection Service Points, How to Cope with Intermittent Malfunctions).

STEP 5. Check whether the DTC is reset.

Check again if the DTC is set to the EV-ECU.

(1) Erase the DTC.
(2) Set the electric motor switch from the "LOCK" (OFF) position to the "ON", and then to the "START" position temporarily.
(3) After the electric motor switch from the "LOCK" (OFF) position, reset the electric motor switch from the "LOCK" (OFF) position to the "ON" position.
(4) Check if the DTC is set.

Q: Is the DTC P1A16 set?

YES : Return to Step 1.
NO : The diagnosis is complete.

DTC P1A17 High-voltage system error (3)

REGULAR CHARGING CONTROL SYSTEM CIRCUIT

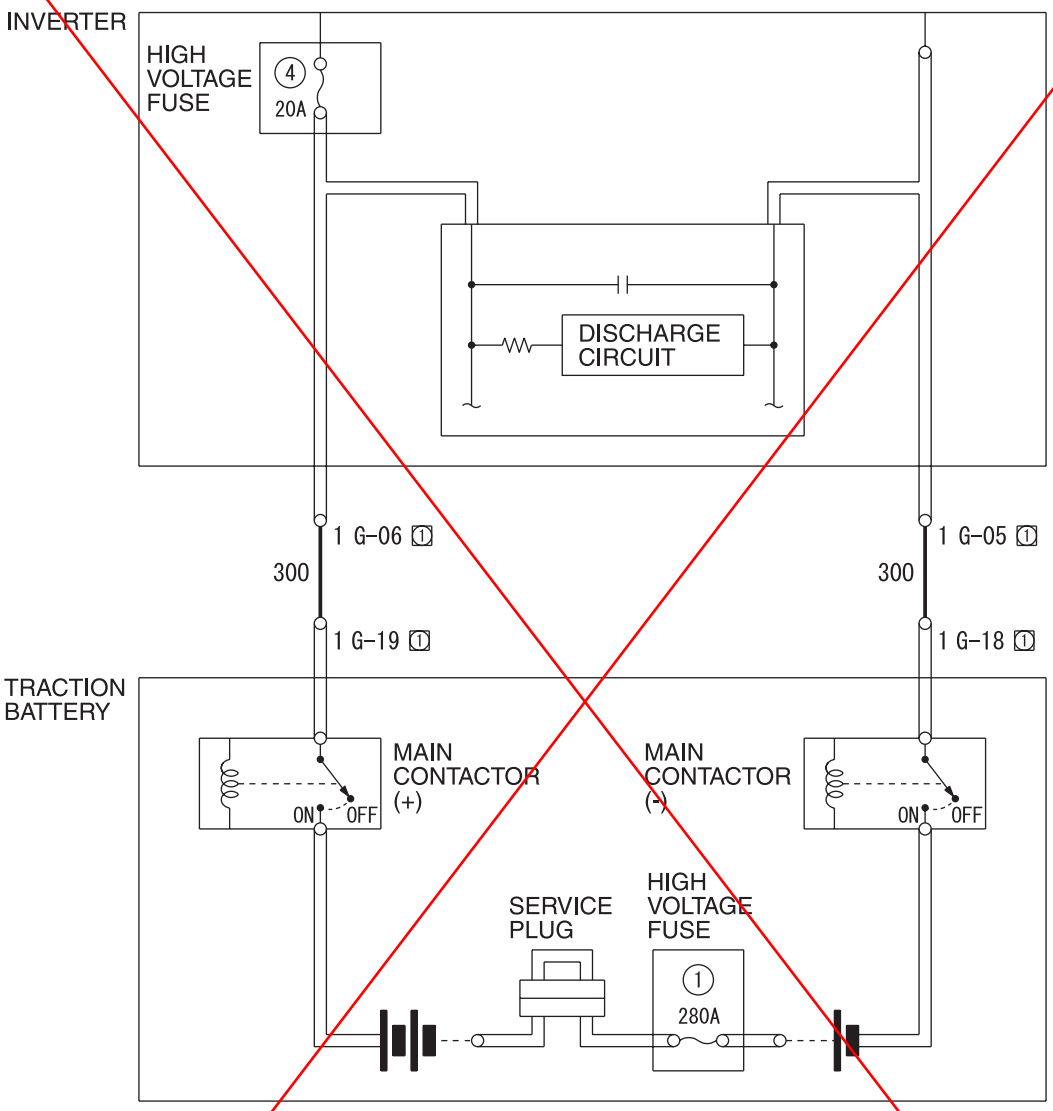

Wire colour code
B : Black LG : Light green G : Green L : Blue W : White Y : Yellow SB : Sky blue
BR : Brown O : Orange GR : Grey R : Red P : Pink V : Violet PU : Purple SI : Silver

ACA03511 AB

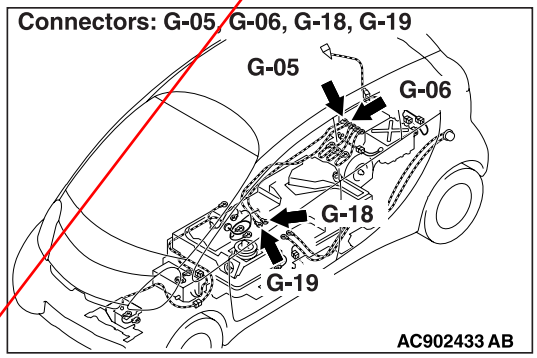

AC902433 AB

⚠ CAUTION

If there is any problem in the CAN bus lines, an incorrect DTC may be set. Prior to this diagnosis, always diagnose the CAN bus lines (Refer to GROUP 54C – CAN Bus Diagnostics Table .).

OPERATION

- The high-voltage circuit activation and shutdown are controlled by the EV-ECU. The EV-ECU also monitors the voltage of the smooth condenser in the EMCU via the CAN communication.

TSB Revision

Replace with attached sheets 29 (4/8—8/8)

<New>

Attached sheet 29 (2/8)

<Old>

DTC SET CONDITION

- When the main contactors (+) and (–) are set to ON, if the voltage of the smooth condenser in the EMCU is kept at 200 V or less, the DTC P1A17 will be set.

PROBABLE CAUSES

- Damaged wiring harness or connector(s)
- Malfunction of the traction battery assembly
- Malfunction of the EMCU

DIAGNOSIS

STEP 1. Using scan tool MB991958, diagnose the CAN bus lines.

Use the scan tool to diagnose the CAN bus lines.

Q: Is the check result normal?

YES : Go to Step 3.
NO : Repair the CAN bus line (Refer to GROUP 54C – CAN Bus Diagnostics Table .). Then go to Step 2.

STEP 2. DTC recheck after resetting CAN bus lines

Check again if the DTC P1A17 is set to the EV-ECU.
(1) Erase the DTC.
(2) Set the electric motor switch from the "LOCK" (OFF) position to the "ON" position.
(3) Set the electric motor switch to the "START" position, and start the electric motor unit.
(4) Check if the DTC is set.

Q: Is the DTC set?

YES : Go to Step 3.
NO : This diagnosis is complete.

STEP 3. Using scan tool other system DTC

Check if the DTC P1A1B is set to the EMCU.

Q: Is the DTC set?

YES : Carry out troubleshooting for the DTC No. P1A1B (Refer to .). Then go to Step 4.
NO : Go to Step 4.

STEP 4. Connector check: G-18, G-19 traction battery connector, G-05, G-06 inverter connector

⚠ ***DANGER***

When servicing the high voltage system parts, always shut off the high voltage by removing the service plug (Refer to .).

⚠ ***DANGER***

Be sure to wear the specified protective equipment when removing the service plug.

Q: Is the check result normal?

YES : Go to Step 5.
NO : Replace the wiring harness.

TSB Revision

<Old>

STEP 5. Check the wiring harness between G-05, G-06 inverter connector terminal and G-18, G-19 traction battery connector terminal.

⚠ ***DANGER***

When servicing the high voltage system parts, always shut off the high voltage by removing the service plug (Refer to .).

⚠ ***DANGER***

Be sure to wear the specified protective equipment when removing the service plug.

Check the high-voltage line for open circuit.

Q: Is the check result normal?

YES : Go to Step 6.
NO : Replace the wiring harness.

STEP 6. Check whether the DTC is reset.

Check again if the DTC is set to the EV-ECU.
(1) Erase the DTC.
(2) Set the electric motor switch from the "LOCK" (OFF) position to the "ON" position.
(3) Set the electric motor switch to the "START" position, and start the electric motor unit.
(4) Check if the DTC is set.

Q: Is the DTC P1A17 set?

YES : Replace the traction battery assembly (Refer to .). Then go to Step 7.
NO : Intermittent malfunction (Refer to GROUP 00 – How to Use Troubleshooting/Inspection Service Points, How to Cope with Intermittent Malfunctions .).

STEP 7. Check whether the DTC is reset.

Check again if the DTC is set to the EV-ECU.
(1) Erase the DTC.
(2) Set the electric motor switch from the "LOCK" (OFF) position to the "ON" position.
(3) Set the electric motor switch to the "START" position, and start the electric motor unit.
(4) Check if the DTC is set.

Q: Is the DTC P1A17 set?

YES : Return to Step 1.
NO : The diagnosis is complete.

DTC P1A17 High-voltage system error (3)

REGULAR CHARGING CONTROL SYSTEM CIRCUIT

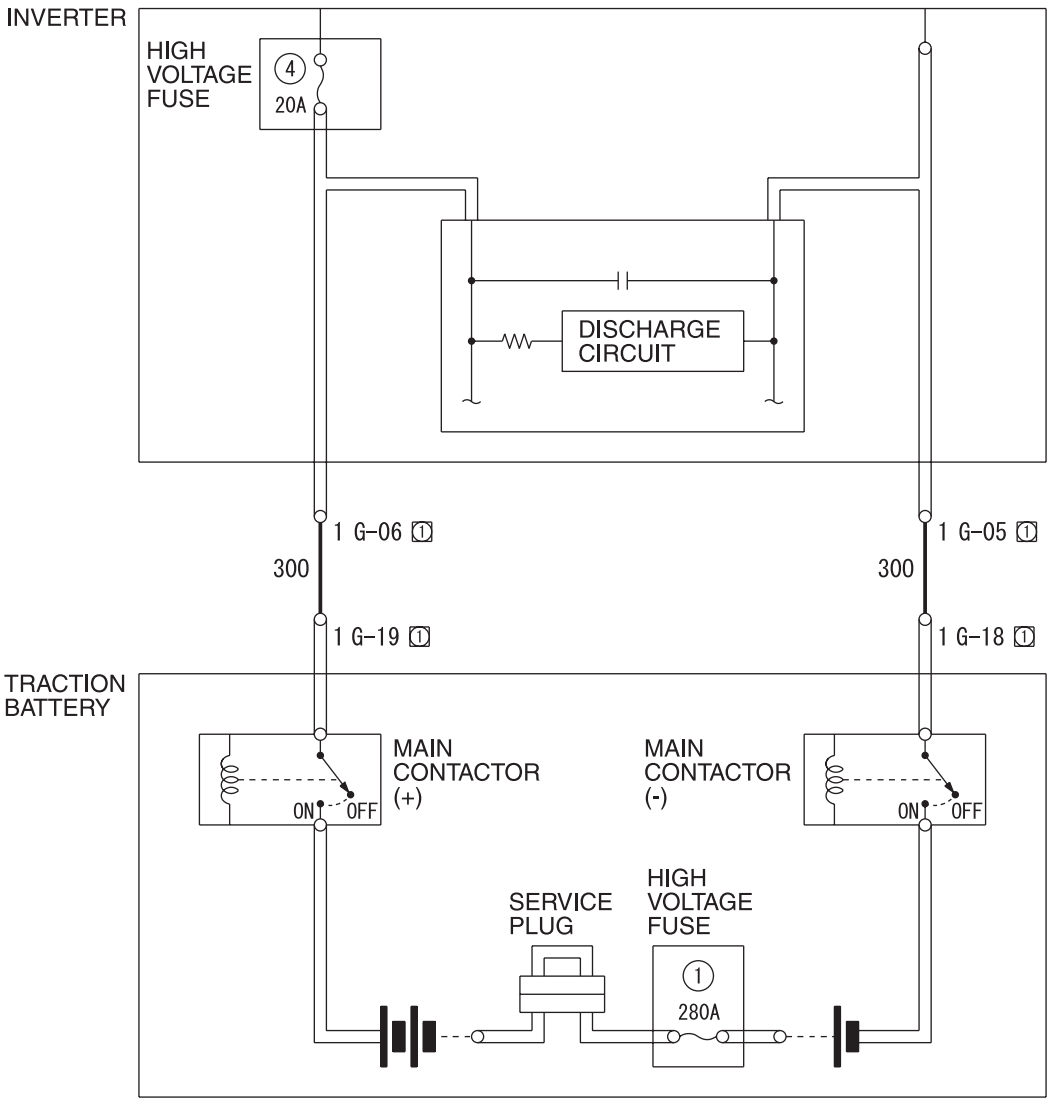

Wire colour code
B : Black LG : Light green G : Green L : Blue W : White Y : Yellow SB : Sky blue
BR : Brown O : Orange GR : Grey R : Red P : Pink V : Violet PU : Purple SI : Silver

ACA03511 AB

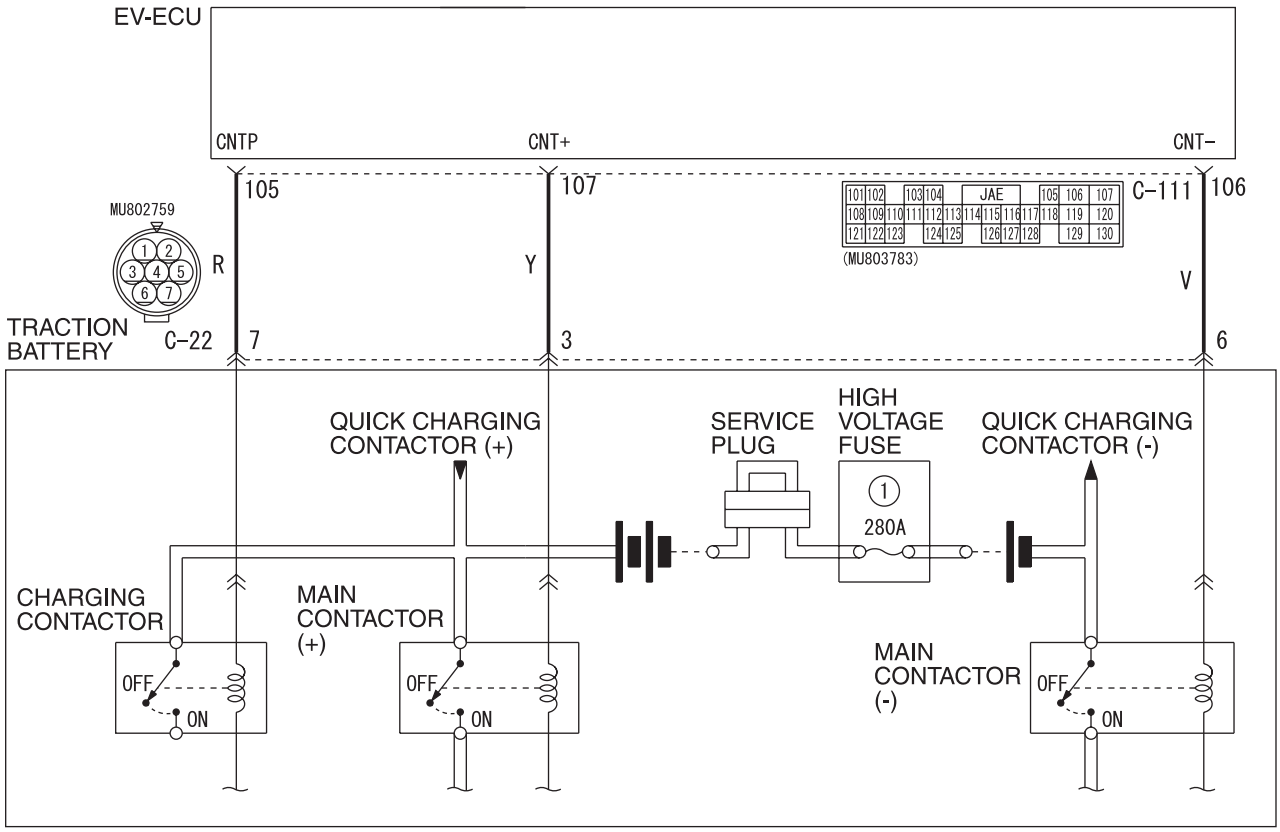

Wire colour code
B : Black LG : Light green G : Green L : Blue W : White Y : Yellow SB : Sky blue
BR : Brown O : Orange GR : Grey R : Red P : Pink V : Violet PU : Purple SI : Silver

ACA03485 AC

Connector: C-22

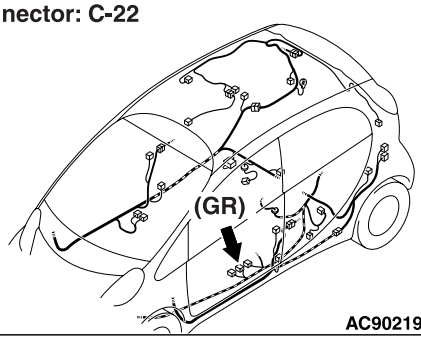

AC902191AO

Connector: C-111
Rear floor lower part

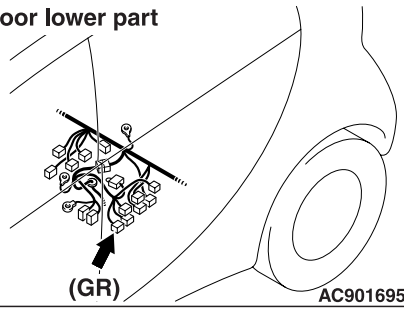

AC901695 AM

Connectors: G-05, G-06, G-18, G-19

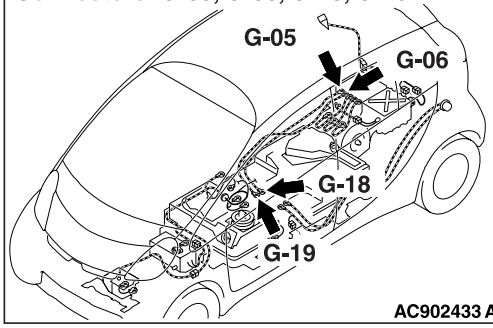

AC902433 AB

⚠ *DANGER*

- ***When servicing the high voltage system parts, always shut off the high voltage by removing the service plug (Refer to).***
- ***When servicing the high voltage system parts, always wear the protective equipment or armor to measure the high voltage (Refer to).***

⚠ **CAUTION**

If there is any problem in the CAN bus lines, an incorrect DTC may be set. Prior to this diagnosis, always diagnose the CAN bus lines (Refer to GROUP 54C – CAN Bus Diagnostics Table).

OPERATION

- The high-voltage circuit activation and shutdown are controlled by the EV-ECU. The EV-ECU also monitors the voltage of the smooth condenser in the EMCU via the CAN communication.

DTC SET CONDITION

- When the main contactors (+) and (–) are set to ON, if the voltage of the smooth condenser in the EMCU is kept at 200 V or less, the DTC P1A17 will be set.

PROBABLE CAUSES

- Damaged wiring harness or connector(s)
- Malfunction of the traction battery assembly
- Malfunction of the EMCU

DIAGNOSIS

STEP 1. Using scan tool MB991958, diagnose the CAN bus lines.

Use the scan tool to diagnose the CAN bus lines.

Q: Is the check result normal?

YES : Go to Step 3.
NO : Repair the CAN bus line (Refer to GROUP 54C – CAN Bus Diagnostics Table). Then go to Step 2.

STEP 2. DTC recheck after resetting CAN bus lines

Check again if the DTC P1A17 is set to the EV-ECU.
(1) Erase the DTC.
(2) Set the electric motor switch from the "LOCK" (OFF) position to the "ON", and then to the "START" position temporarily.
(3) Check if the DTC is set.

Q: Is the DTC set?

YES : Go to Step 3.
NO : This diagnosis is complete.

STEP 3. Using scan tool other DTC.

Check if the DTC No. P1A15 is set to the EV-ECU.

Q: Is the diagnosis code set?

YES : Carry out troubleshooting for the DTC.
NO : Go to Step 4.

STEP 4. Connector check: G-18, G-19 traction battery connector, G-05, G-06 inverter connector

⚠ ***DANGER***

Carry out the check on the high-voltage circuit while reading carefully the precautions on handling a high-voltage vehicle.

⚠ ***DANGER***

Be sure to wear the specified protective equipment when removing the service plug.

- Check whether terminals are engaged correctly (deformation or discolouration).
- Check whether the terminals are tightened to the specified torque (Refer to and).
- Check whether foreign materials are pinched.

Q: Is the check result normal?

Yes: Go to Step 5.

No: Reconnect the terminals or replace the traction battery cable.

STEP 5. Check the wiring harness between G-05, G-06 inverter connector terminal and G-18, G-19 traction battery connector terminal.

⚠ ***DANGER***

Carry out the check on the high-voltage circuit while reading carefully the precautions on handling a high-voltage vehicle.

⚠ ***DANGER***

Be sure to wear the specified protective equipment when removing the service plug.

Check the high-voltage line for damage.

Q: Is the check result normal?

YES : Go to Step 6.

NO : Replace the traction battery cable.

STEP 6. Connector check: C-22 traction battery connector, C-111 EV-ECU connector

Q: Is the check result normal?

YES : Go to Step 7.

NO : Repair the damaged connector

STEP 7. Check the wiring harness between C-111 EV-ECU connector terminal No. 105, 106, 107 and C-22 traction battery connector terminal No. 3, 6, 7.

Check the signal lines, ground line for open.

Q: Is the check result normal?

YES : Go to Step 8.

NO : Repair the wiring harness.

STEP 8. Check on main contactor (+), (-), charging contactor coil resistance of contactor.
Refer to

Q: Is the check result normal?

YES : Go to Step 9.
NO : Replace the traction battery assembly (Refer to).

STEP 9. Check whether the DTC is reset.
Check again if the DTC is set to the EV-ECU.
(1) Erase the DTC.
(2) Set the electric motor switch from the "LOCK" (OFF) position to the "ON", and then to the "START" position temporarily.
(3) Check if the DTC is set.

Q: Is the DTC P1A17 set?

YES : Replace the traction battery assembly (Refer to). Then go to Step 10.
NO : Intermittent malfunction (Refer to GROUP 00 – How to Use Troubleshooting/Inspection Service Points, How to Cope with Intermittent Malfunctions).

STEP 10. Check whether the DTC is reset.
Check again if the DTC is set to the EV-ECU.
(1) Erase the DTC.
(2) Set the electric motor switch from the "LOCK" (OFF) position to the "ON", and then to the "START" position temporarily.
(3) Check if the DTC is set.

Q: Is the DTC P1A17 set?

YES : Return to Step 1.
NO : The diagnosis is complete.

Replace with attached sheets 30 (3/4—4/4)

<New>

Attached sheet 30 (1/4)

STEP 4. Check whether the DTC is reset.

Check again if the DTC is set to the EV-ECU.

(1) Erase the DTC.
(2) Set the electric motor switch from the "LOCK" (OFF) position to the "ON" position.
(3) Set the electric motor switch to the "LOCK" (OFF) position, and start the electric motor unit.
(4) Run the vehicle.
(5) Check if the DTC is set.

Q: Is the DTC P1A25 set?

YES : Return to Step 1.
NO : The diagnosis is complete.

<Old>

DTC P1A26 Condenser discharge command OFF waiting timeout (EMCU)

⚠ CAUTION
If there is any problem in the CAN bus lines, an incorrect DTC may be set. Prior to this diagnosis, always diagnose the CAN bus lines (Refer to GROUP 54C – CAN Bus Diagnostics Table .).

OPERATION

- EMCU communicates with the EV-ECU via CAN.

DTC SET CONDITION

- When the DTC P1A26 is set to the EMCU, the DTC P1A26 will be set.

PROBABLE CAUSE

- Malfunction of the EMCU system

DIAGNOSIS

STEP 1. Using scan tool MB991958, diagnose the CAN bus lines.

Use the scan tool to diagnose the CAN bus lines.

Q: Is the check result normal?

YES : Go to Step 3.
NO : Repair the CAN bus line (Refer to GROUP 54C – CAN Bus Diagnostics Table .). Then go to Step 2.

STEP 2. DTC recheck after resetting CAN bus lines

Check again if the DTC P1A26 is set to the EV-ECU.

(1) Erase the DTC.
(2) Set the electric motor switch from the "LOCK" (OFF) position to the "ON" position.
(3) Set the electric motor switch to the "LOCK" (OFF) position, and start the electric motor unit.
(4) Run the vehicle.
(5) Check if the DTC is set.

Q: Is the DTC set?

YES : Go to Step 3.
NO : This diagnosis is complete.

TSB Revision

STEP 3. Using scan tool other system DTC.
Check if the DTC P1A26 is set to the EMCU.

Q: Is the DTC set?

YES : Carry out troubleshooting for the DTC P1A26 (Refer to .). Then go to Step 4.
NO : Go to Step 4.

STEP 4. Check whether the DTC is reset.
Check again if the DTC is set to the EV-ECU.
(1) Erase the DTC.
(2) Set the electric motor switch from the "LOCK" (OFF) position to the "ON" position.
(3) Set the electric motor switch to the "LOCK" (OFF) position, and start the electric motor unit.
(4) Run the vehicle.
(5) Check if the DTC is set.

Q: Is the DTC P1A26 set?

YES : Return to Step 1.
NO : The diagnosis is complete.

DTC P1A27 EV-ECU torque command abnormality (EMCU)

⚠ CAUTION
If there is any problem in the CAN bus lines, an incorrect DTC may be set. Prior to this diagnosis, always diagnose the CAN bus lines (Refer to GROUP 54C – CAN Bus Diagnostics Table .).

OPERATION
- EMCU communicates with the EV-ECU via CAN.

DTC SET CONDITION
- When the DTC P1A27 is set to the EMCU, the DTC P1A27 will be set.

PROBABLE CAUSE
- Malfunction of the EMCU system

DIAGNOSIS

STEP 1. Using scan tool MB991958, diagnose the CAN bus lines.
Use the scan tool to diagnose the CAN bus lines.

Q: Is the check result normal?

YES : Go to Step 3.
NO : Repair the CAN bus line (Refer to GROUP 54C – CAN Bus Diagnostics Table .). Then go to Step 2.

DTC P1A26 Condenser discharge command OFF waiting timeout (EMCU)

⚠ CAUTION
If there is any problem in the CAN bus lines, an incorrect DTC may be set. Prior to this diagnosis, always diagnose the CAN bus lines (Refer to GROUP 54C – CAN Bus Diagnostics Table).

OPERATION
- EMCU communicates with the EV-ECU via CAN.

DTC SET CONDITION
- If the DTC P1A26 is set to the EMCU when the high-voltage circuit is shut down, the DTC P1A26 will be set.

NOTE: The diagnosis code is stored as a historic trouble. Therefore, follow the troubleshooting steps for the historic trouble.

PROBABLE CAUSE
- Damaged wiring harness or connector(s)
- Malfunction of the EV water PTC heater
- Malfunction of the A/C compressor
- Malfunction of the onboard charger/DC-DC converter
- Malfunction of the traction battery assembly
- Malfunction of the EMCU

DIAGNOSIS

STEP 1. Using scan tool MB991958, diagnose the CAN bus lines.
Use the scan tool to diagnose the CAN bus lines.

Q: Is the check result normal?
YES : Go to Step 3.
NO : Repair the CAN bus line (Refer to GROUP 54C – CAN Bus Diagnostics Table). Then go to Step 2.

STEP 2. DTC recheck after resetting CAN bus lines
Check again if the DTC P1A26 is set to the EV-ECU.
(1) Erase the DTC.
(2) Set the electric motor switch from the "LOCK" (OFF) position to the "ON", and then to the "START" position temporarily.
(3) After the electric motor switch from the "LOCK" (OFF) position, reset the electric motor switch from the "LOCK" (OFF) position to the "ON" position.
(4) Check if the DTC is set.

Q: Is the DTC set?
YES : Go to Step 3.
NO : This diagnosis is complete.

STEP 3. Using scan tool other DTC.
Check if the DTC No. P0AA1, P0AA2 or P0AE2 is set to the EV-ECU.

Q: Is the DTC set?
YES : Carry out troubleshooting for the DTC.
NO : Go to Step 4.

STEP 4. Using scan tool other system DTC.
Check if the DTC P1A26 is set to the EMCU.

Q: Is the DTC set?

YES : Carry out troubleshooting for the DTC P1A26 (Refer to). Then go to Step 5.
NO : Go to Step 5.

STEP 5. Check whether the DTC is reset.
Check again if the DTC is set to the EV-ECU.
(1) Erase the DTC.
(2) Set the electric motor switch from the "LOCK" (OFF) position to the "ON", and then to the "START" position temporarily.
(3) After the electric motor switch from the "LOCK" (OFF) position, reset the electric motor switch from the "LOCK" (OFF) position to the "ON" position.
(4) Check if the DTC is set.

Q: Is the DTC P1A26 set?

YES : Return to Step 1.
NO : The diagnosis is complete.

DTC P1A27 EV-ECU torque command abnormality (EMCU)

⚠ CAUTION
If there is any problem in the CAN bus lines, an incorrect DTC may be set. Prior to this diagnosis, always diagnose the CAN bus lines (Refer to GROUP 54C – CAN Bus Diagnostics Table .).

OPERATION
- EMCU communicates with the EV-ECU via CAN.

DTC SET CONDITION
- When the DTC P1A27 is set to the EMCU, the DTC P1A27 will be set.

PROBABLE CAUSE
- Malfunction of the EMCU system

DIAGNOSIS

STEP 1. Using scan tool MB991958, diagnose the CAN bus lines.
Use the scan tool to diagnose the CAN bus lines.

Q: Is the check result normal?

YES : Go to Step 3.
NO : Repair the CAN bus line (Refer to GROUP 54C – CAN Bus Diagnostics Table .). Then go to Step 2.

Replace with attached sheets 31 (3/4－4/4)

<New>

Attached sheet 31 (1/4)

DIAGNOSIS

STEP 1. Using scan tool MB991958, diagnose the CAN bus lines.
Use the scan tool to diagnose the CAN bus lines.

Q: Is the check result normal?

YES : Go to Step 3.
NO : Repair the CAN bus line (Refer to GROUP 54C – CAN Bus Diagnostics Table .). Then go to Step 2.

STEP 2. DTC recheck after resetting CAN bus lines
Check again if the DTC P1AF1 is set to the EV-ECU.
(1) Erase the DTC.
(2) Set the electric motor switch from the "LOCK" (OFF) position to the "ON" position.
(3) Check if the DTC is set.

Q: Is the DTC set?

YES : Go to Step 3.
NO : This diagnosis is complete.

STEP 3. Using scan tool other system DTC.
Check if the DTC is set to the EMCU.

Q: Is the DTC set?

YES : Carry out troubleshooting for the EMCU (Refer to .). Then go to Step 4.
NO : Go to Step 4.

STEP 4. Check whether the DTC is reset.
Check again if the DTC is set to the EV-ECU.
(1) Erase the DTC.
(2) Set the electric motor switch from the "LOCK" (OFF) position to the "ON" position.
(3) Check if the DTC is set.

Q: Is the DTC P1AF1 set?

YES : Return to Step 1.
NO : The diagnosis is complete.

<Old>

DTC P1AF2 EMCU condenser discharge command F/B

⚠ CAUTION
If there is any problem in the CAN bus lines, an incorrect DTC may be set. Prior to this diagnosis, always diagnose the CAN bus lines (Refer to GROUP 54C – CAN Bus Diagnostics Table .).

OPERATION
- EMCU communicates with the EV-ECU via CAN.

DTC SET CONDITION
- If the conditions that the EV-ECU discharge command is ON and EMCU discharge command feedback is OFF are met for 2 seconds or longer, the DTC P1AF2 will be set.

PROBABLE CAUSE
- Malfunction of the EMCU system

TSB Revision

Replace with attached sheets 31 (3/4—4/4)

<New>

Attached sheet 31 (2/4)

<Old>

DIAGNOSIS

STEP 1. Using scan tool MB991958, diagnose the CAN bus lines.
Use the scan tool to diagnose the CAN bus lines.

Q: Is the check result normal?

YES : Go to Step 3.
NO : Repair the CAN bus line (Refer to GROUP 54C – CAN Bus Diagnostics Table .). Then go to Step 2.

STEP 2. DTC recheck after resetting CAN bus lines
Check again if the DTC P1AF2 is set to the EV-ECU.
(1) Erase the DTC.
(2) Set the electric motor switch from the "LOCK" (OFF) position to the "ON" position.
(3) Check if the DTC is set.

Q: Is the DTC set?

YES : Go to Step 3.
NO : This diagnosis is complete.

STEP 3. Using scan tool other system DTC.
Check if the DTC is set to the EMCU.

Q: Is the DTC set?

YES : Carry out troubleshooting for the EMCU (Refer to .). Then go to Step 4.
NO : Go to Step 4.

STEP 4. Check whether the DTC is reset.
Check again if the DTC is set to the EV-ECU.
(1) Erase the DTC.
(2) Set the electric motor switch from the "LOCK" (OFF) position to the "ON" position.
(3) Check if the DTC is set.

Q: Is the DTC P1AF2 set?

YES : Return to Step 1.
NO : The diagnosis is complete.

DTC P1AF3 BMU READY timeout

⚠ CAUTION
If there is any problem in the CAN bus lines, an incorrect DTC may be set. Prior to this diagnosis, always diagnose the CAN bus lines (Refer to GROUP 54C – CAN Bus Diagnostics Table .).

OPERATION
- BMU communicates with EV-ECU via CAN.

DTC SET CONDITION
- If the BMU_READY signal ON from the BMU cannot be received for the specific time or longer, the DTC P1AF3 will be set.

PROBABLE CAUSE
- Malfunction of the BMU system

To Attached sheet 31 (1/4－2/4)

Attached sheet 31 (3/4)

DTC P1AF2 EMCU condenser discharge command F/B

⚠ CAUTION
If there is any problem in the CAN bus lines, an incorrect DTC may be set. Prior to this diagnosis, always diagnose the CAN bus lines (Refer to GROUP 54C – CAN Bus Diagnostics Table).

OPERATION
- EMCU communicates with the EV-ECU via CAN.

DTC SET CONDITION
- If the conditions that the EV-ECU discharge command is ON and EMCU discharge command feedback is OFF are met for 2 seconds or longer when the high-voltage circuit is shut down, the DTC P1AF2 will be set.

PROBABLE CAUSE
- Damaged wiring harness or connector(s)
- Malfunction of the EV water PTC heater
- Malfunction of the A/C compressor
- Malfunction of the onboard charger/DC-DC converter
- Malfunction of the traction battery assembly
- Malfunction of the EMCU

DIAGNOSIS

STEP 1. Using scan tool MB991958, diagnose the CAN bus lines.
Use the scan tool to diagnose the CAN bus lines.

Q: Is the check result normal?
YES : Go to Step 3.
NO : Repair the CAN bus line (Refer to GROUP 54C – CAN Bus Diagnostics Table). Then go to Step 2.

STEP 2. DTC recheck after resetting CAN bus lines
Check again if the DTC P1AF2 is set to the EV-ECU.
(1) Erase the DTC.
(2) Set the electric motor switch from the "LOCK" (OFF) position to the "ON", and then to the "START" position temporarily.
(3) After the electric motor switch from the "LOCK" (OFF) position, reset the electric motor switch from the "LOCK" (OFF) position to the "ON" position.
(4) Check if the DTC is set.

Q: Is the DTC set?
YES : Go to Step 3.
NO : This diagnosis is complete.

STEP 3. Using scan tool other DTC.
Check if the DTC No. P1A15 is set to the EV-ECU.

Q: Is the DTC set?
YES : Carry out troubleshooting for the DTC.
NO : Go to Step 4.

STEP 4. Using scan tool other system DTC.
Check if the DTC is set to the EMCU.

Q: Is the DTC set?

YES : Carry out troubleshooting for the EMCU (Refer to). Then go to Step 5.
NO : Go to Step 5.

STEP 5. Check whether the DTC is reset.
Check again if the DTC is set to the EV-ECU.
(1) Erase the DTC.
(2) Set the electric motor switch from the "LOCK" (OFF) position to the "ON", and then to the "START" position temporarily.
(3) After the electric motor switch from the "LOCK" (OFF) position, reset the electric motor switch from the "LOCK" (OFF) position to the "ON" position.
(4) Check if the DTC is set.

Q: Is the DTC P1AF2 set?

YES : Return to Step 1.
NO : The diagnosis is complete.

DTC P1AF3 BMU READY timeout

⚠ CAUTION
If there is any problem in the CAN bus lines, an incorrect DTC may be set. Prior to this diagnosis, always diagnose the CAN bus lines (Refer to GROUP 54C – CAN Bus Diagnostics Table .).

OPERATION
- BMU communicates with EV-ECU via CAN.

DTC SET CONDITION
- If the BMU_READY signal ON from the BMU cannot be received for the specific time or longer, the DTC P1AF3 will be set.

PROBABLE CAUSE
- Malfunction of the BMU system

DIAGNOSISE

STEP 1. Using scan tool MB991958, diagnose the CAN bus lines.
Use the scan tool to diagnose the CAN bus lines.

Q: Is the check result normal?

YES : Go to Step 3.
NO : Repair the CAN bus line (Refer to GROUP 54C – CAN Bus Diagnostics Table .). Then go to Step 2.