SERVICE BULLETIN

MITSUBISHI MOTORS

GLOBAL AFTER SALES OFFICE, MITSUBISHI MOTORS CORPORATION

PURPOSE : INFORMATION	ISSUE NO. : MSB-12EXML11_12-001A	DATE : 2012-11-13
SUBJECT : ABOLITION OF ENGINE OIL PUMP CHAIN GUIDE		<Destination/Model> (G.EXP/GCC/EUR/RUSSIA/ MMAL/NZ/MMNA//MEXICO CY0A/CX0A/CW0W/GA0W/GF0W <M/Y> 10/13
GROUP : ENGINE OVERHAUL & LUBRICATION		

1. Description:

See the attached sheets for the information about the change of mention in the applicable service manual.

2. Applicable manual:

See the attached sheets

3. Details:

See the attached sheets

※ Time for enforcement : From July, 2012

※ About the supplementary article of the oil pump chain guide until June 30, 2012, there is production so far.

For overseas market

<EU/RUSSIA>

Applicable manual	Pub. No.		Applicable title (INFO-ID)	Contents
2013 LANCER/ LANCER SPORTBACK Workshop Manual	EU	CG1E13E1-CD (English) CG1S13E1-CD (Spanish) CG1F13E1-CD (French) CG1G13E1-CD (German) CG1I13E1-CD (Italian)	OIL PUMP CHAIN REMOVAL AND INSTALLATION [G11D] (M113-03-370-61300-01)	Attached sheet4 (1/4)
			OIL PUMP CHAIN REMOVAL AND INSTALLATION [G11F] (M113-03-370-62400-01)	
			OIL PUMP CHAIN REMOVAL AND INSTALLATION [G11L] (M113-03-370-63500-01)	
			OIL PUMP CHAIN REMOVAL AND INSTALLATION <4B10, 4B11, 4J1> [G12] (M121-00-310-43100-01)	Attached sheet4 (2/4)
	RUSSIA	N/A		
2013 OUTLANDER Workshop Manual	EU	CGFE13E1-CD (English) CGFS13E1-CD (Spanish) CGFF13E1-CD (French) CGFG13E1-CD (German) CGFI13E1-CD (Italian)	OIL PUMP CHAIN REMOVAL AND INSTALLATION [G11B] (M113-03-370-59400-01)	Attached sheet4 (1/4)
			OIL PUMP CHAIN REMOVAL AND INSTALLATION [G11D] (M113-03-370-58300-01)	
			OIL PUMP CHAIN REMOVAL AND INSTALLATION <4B11, 4J1> [G12] (M121-00-310-45300-01)	Attached sheet4 (2/4)
	RUSSIA	N/A		
2013 ASX Workshop Manual	EU	CGWE13E2-CD (English) CGWS13E2-CD (Spanish) CGWF13E2-CD (French) CGWG13E2-CD (German) CGWI13E2-CD (Italian)	OIL PUMP CHAIN REMOVAL AND INSTALLATION [G11B] (M113-03-370-64600-01)	Attached sheet4 (1/4)
			OIL PUMP CHAIN REMOVAL AND INSTALLATION <4B11> [G12] (M121-00-310-38900-01)	Attached sheet4 (2/4)
	RUSSIA	N/A		

<G.EXP/GCC>

2013 LANCER/ LANCER EX Workshop Manual	G.EXP/ GCC	PWME1202R (English) PWMS1203R (Spanish)	OIL PUMP CHAIN REMOVAL AND INSTALLATION [G11F] (M113-03-370-56100-01)	Attached sheet4 (1/4)
			OIL PUMP CHAIN REMOVAL AND INSTALLATION <4B1> [G12] (M121-00-310-28200-01) ⚠	Attached sheet4 (2/4) ⚠
2013 ASX Workshop Manual		PWPE1204R (English)	OIL PUMP CHAIN REMOVAL AND INSTALLATION [G11B] (M113-03-370-49700-01)	Attached sheet4 (1/4)
			OIL PUMP CHAIN REMOVAL AND INSTALLATION <4B1> [G12] (M121-00-310-42000-01) ⚠	Attached sheet4 (2/4) ⚠

<MMAL/NZ>

2010 LANCER Workshop Manual	MMAL	MR936920	OIL PUMP CHAIN REMOVAL AND INSTALLATION [G11B] (M113-03-370-34500-01)	Attached sheet4 (1/4)
	NZ	DRAFT	OIL PUMP CHAIN REMOVAL AND INSTALLATION <4B11-Non-turbo, 4B11-Turbo> [G12] (M121-00-310-29300-01)	Attached sheet4 (2/4)

2010 LANCER SPORTBACK Workshop Manual	MMAL	MR936922	OIL PUMP CHAIN REMOVAL AND INSTALLATION [G11B] (M113-03-370-37800-01)	Attached sheet4 (1/4)
	NZ	DRAFT	OIL PUMP CHAIN REMOVAL AND INSTALLATION <4B11> [G12](M121-00-310-30100-01)	Attached sheet4 (2/4)

<MMNA/MEXICO>

2013 LANCER/LANCER SPORTBACK Workshop Manual	MMNA	MSCD-106B-2013	OIL PUMP CHAIN REMOVAL AND INSTALLATION [G11B] (M113-03-370-32300-01)	Attached sheet4 (3/4) ⚠
	MEXICO	DRAFT	OIL PUMP CHAIN REMOVAL AND INSTALLATION <2.0L ENGINE> [G12] (M121-00-310-17400-01)	Attached sheet4 (4/4) ⚠
2013 OUTLANDER SPORT/RVR Service Manual	MMNA	MSCD-017B-2013	OIL PUMP CHAIN REMOVAL AND INSTALLATION [G11B] (M113-03-370-60200-01)	Attached sheet4 (3/4)
			OIL PUMP CHAIN REMOVAL AND INSTALLATION <2.0L ENGINE> [G12] (M121-00-310-42000-01)	Attached sheet4 (4/4)

Attached sheet 4(1/4)

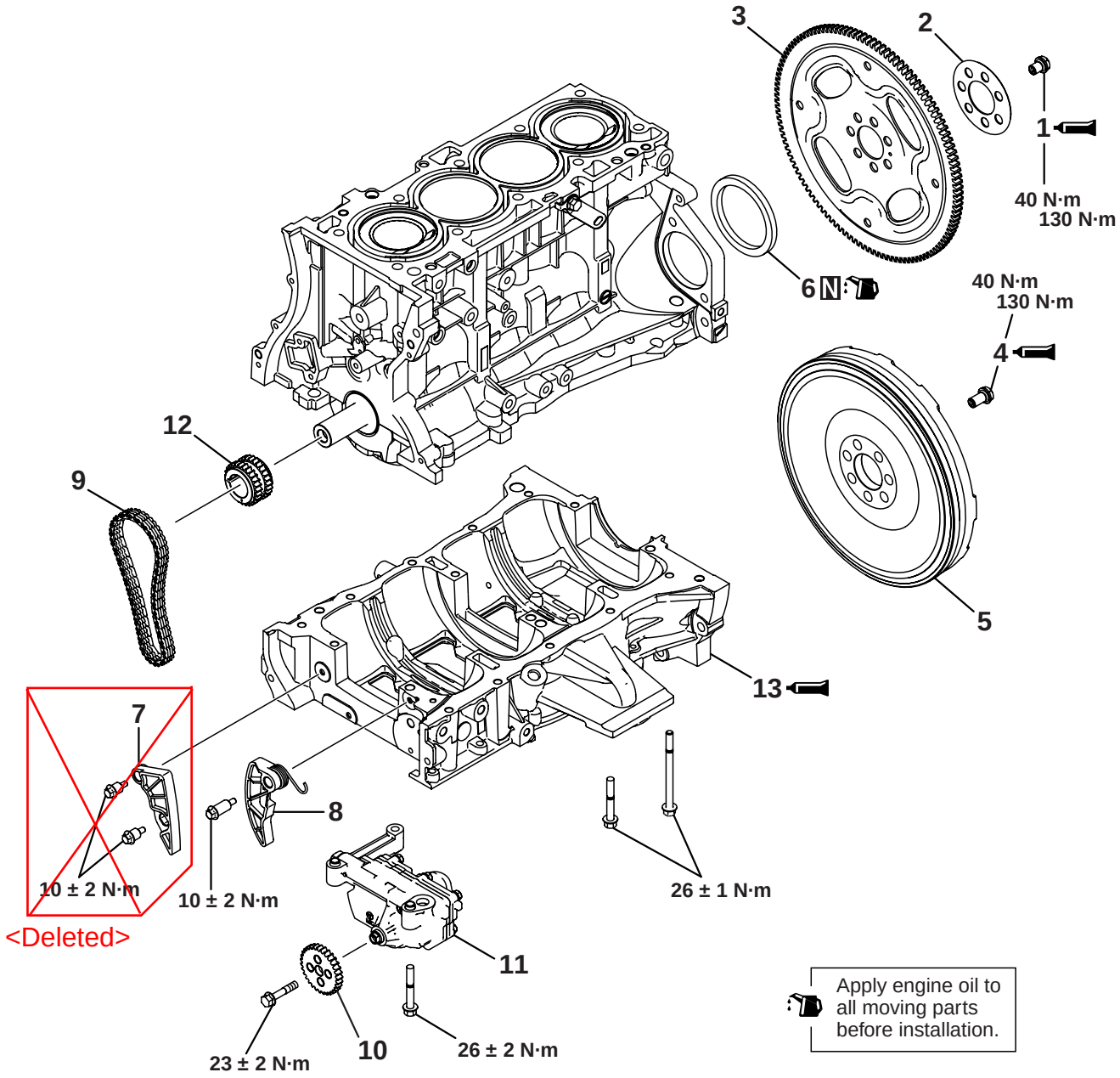

AK603506AF

Removal steps

<<A>>	>>E<<	1.	Drive plate bolt <CVT>
		2.	Adapter plate <CVT>
		3.	Drive plate <CVT>
<<A>>	>>E<<	4.	Flywheel bolt <M/T>
		5.	Flywheel <M/T>
	>>D<<	6.	Rear oil seal
		7.	~~Oil pump chain guide~~ <Deleted>

Removal steps

		8.	Oil pump tensioner lever
		9.	Oil pump chain
<<B>>	>>C<<	10.	Oil pump sprocket
		11.	Oil pump case
	>>B<<	12.	Crankshaft sprocket
<<C>>	>>A<<	13.	Ladder frame

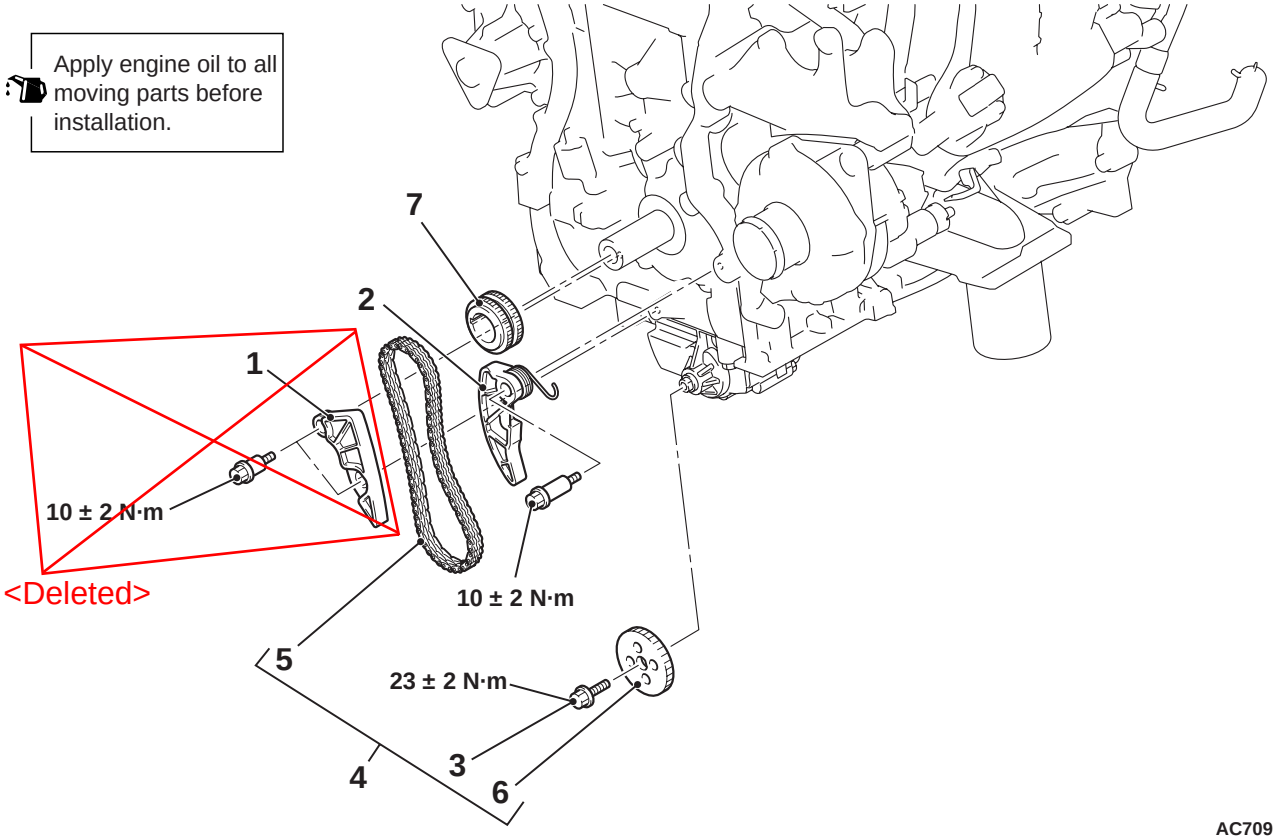

AC709699AB

<Deleted>

		Removal steps
	1.	~~Engine oil pump chain guide~~
>>B<<	2.	Engine oil pump tensioner lever
<<A>>	3.	Engine oil pump sprocket centre bolt
<<A>>	4.	Engine oil pump drive chain and engine oil pump sprocket
>>B<<	5.	Engine oil pump drive chain
>>B<<	6.	Engine oil pump sprocket
>>A<<	7.	Crankshaft sprocket

Attached sheet 4(3/4)

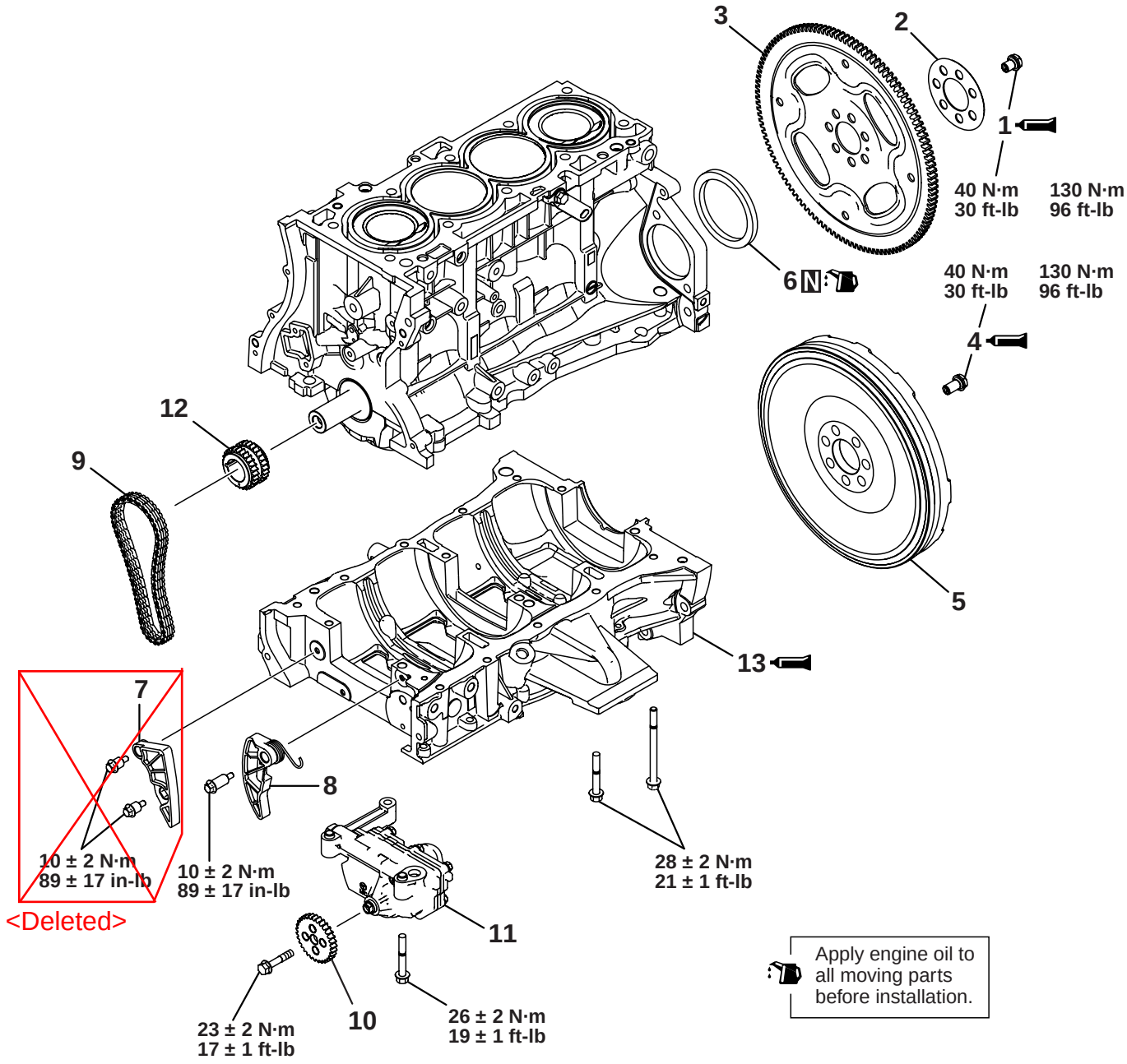

Removal steps

<<A>>	>>E<<	1.	Drive plate bolt <CVT>
		2.	Adapter plate <CVT>
		3.	Drive plate <CVT>
<<A>>	>>E<<	4.	Flywheel bolt <M/T>
		5.	Flywheel <M/T>
	>>D<<	6.	Rear oil seal
		7.	~~Oil pump chain guide~~ <Deleted>

Removal steps

	>>C<<	8.	Oil pump tensioner lever
	>>C<<	9.	Oil pump chain
<<B>>	>>C<<	10.	Oil pump sprocket
		11.	Oil pump case
	>>B<<	12.	Crankshaft sprocket
<<C>>	>>A<<	13.	Ladder frame

Required Special Tools:

- MB991346: Top cover wrench
- MB991883: Flywheel Stopper
- MD998718: Rear Oil Seal Installer

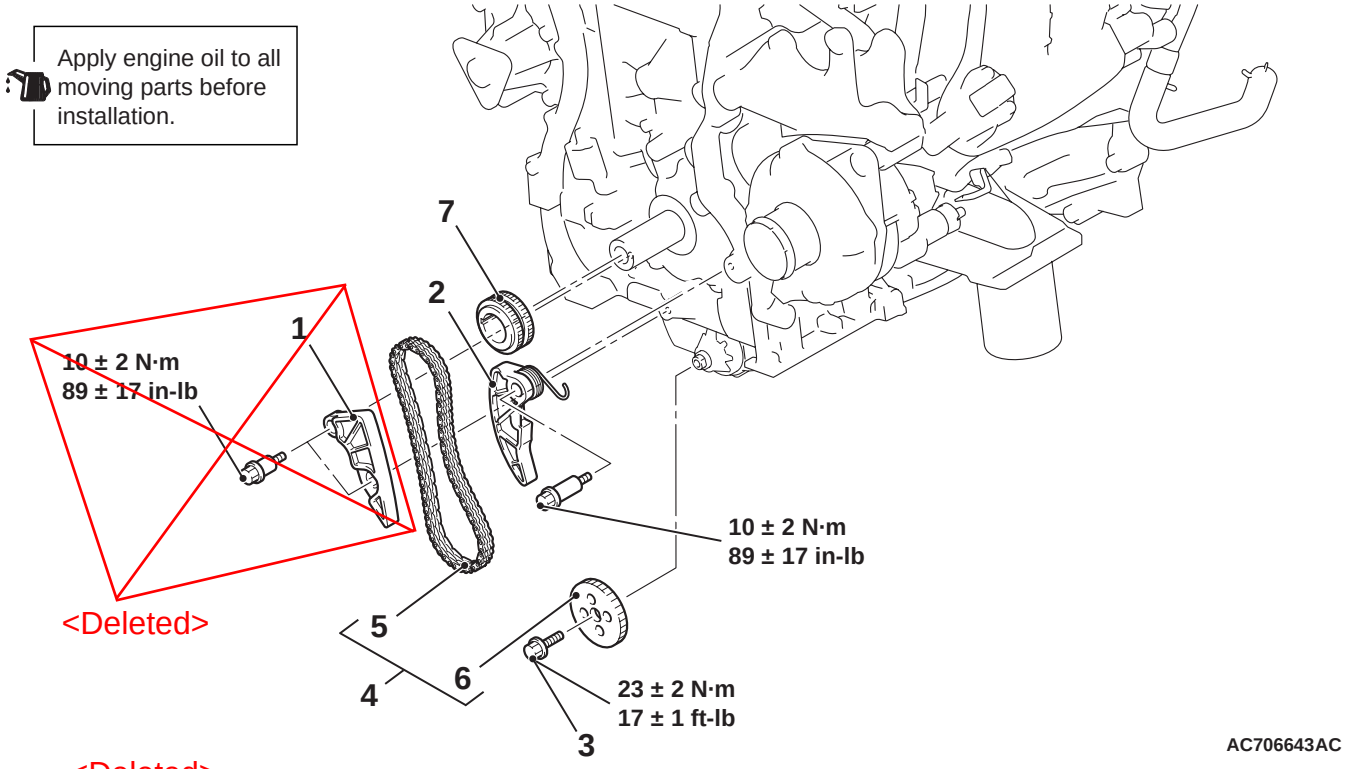

<Deleted>

			Removal steps
		1.	~~Engine oil pump chain guide~~
		2.	Engine oil pump chain tensioner
<<A>>	>>C<<	3.	Engine oil pump sprocket bolt
<<A>>		4.	Engine oil pump drive chain and engine oil pump sprocket
>>B<<		5.	Engine oil pump drive chain
>>B<<		6.	Engine oil pump sprocket
>>A<<		7.	Crankshaft sprocket

Required Special Tool:

- MB991346: Top Cover Wrench